DUAL EQUALIZER AMPLIFIER WITH ALC

—— YD22241

DESCRIPTION

The YD22241 is a monolithic integrated circuit consisting of dual equalizer amplifier with ALC. It is suitable for stereo radio cassette tape recorder.

FEATURES

*Dual equalizer amplifier with built-in ALC circuit
*Low noise V_{NI}=1.0μV (typ.)
*High open loop voltage gain: Gvo=80dB (typ.)
*Power voltage range: 4.5～14V
*Good ALC response balance between channels
*Not necessary the diode of transistor for ALC
*Built in power supply muting circuit
*Minimum number of external parts required
*Package: SIP-9

BLOCK DIAGRAM

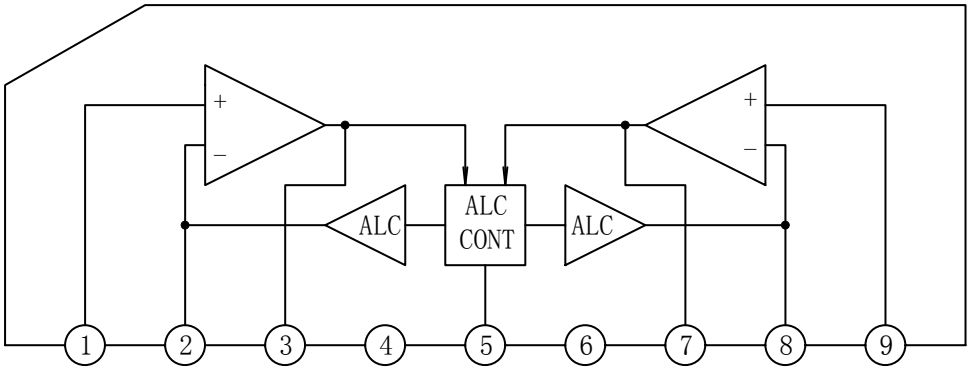

WuXi YouDa Electronics Co., Ltd

Add: No.5 Xijin Road, National Hi-Tech Industrial Development Zone, Wuxi Jiangsu China
Tel: 86-510-85205117 86-510-85205106 Fax: 86-510-85205110 Website: www.e-youda.com
SHENZHEN OFFICE Tel: 86-755-83740369 Fax: 86-755-83741418

ABSOLUTE MAXIMUM RATINGS (Tamb=25℃)

PARAMETER	SYMBOL	VALUE	UNIT
Supply Voltage	V_{CC}	16	V
Power Dissipation	P_D	550	mW
Operating Temperature	Topr	-20～+75	℃
Storage Temperature	Tstg	-40～+125	℃

ELECTRICAL CHARACTERISTICS

(Tamb=25℃, Vcc=9V, f=1kHz, Unless otherwise specified)

PARAMETER	SYMBOL	TEST CONDITIONS	MIN	TYP	MAX	UNIT
Quiescent Current	Iccq	Vi=0	1.5	3.5	4.5	mA
Open Loop Voltage Gain	Gvo	V_O=0.3V	70	80		dB
Closed Loop Voltage Gain	Gvc	V_O=0.3V	45	48	50	dB
Output Voltage	Vo	THD=1%	0.6	1.2		V
Total Harmonic Distortion	THD	V_O=0.3V		0.1	0.3	%
Input Noise Voltage	V_{Ni}	Rg=2.2kΩ, BW=20Hz～20kHz		1.0	2.0	μV
Input Resistance	Zi		15	25	45	kΩ
ALC Range	ΔV_{ALC}	Rg=3.9kΩ, THD=10%	40	45		dB
ALC Balance	ΔGv	Vin=1mV		0	2.5	dB

APPLICATION CIRCUIT

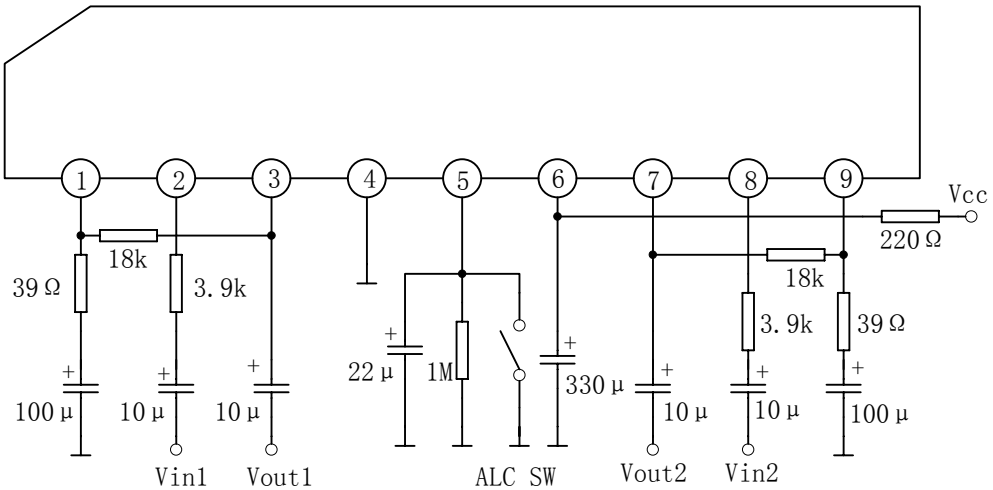

OUTLINE DRAWING

SIP9-P-2.54A

Unit : mm