SEMTECH

SC2643
2, 3 or 4 Phase Combi-Sense™ PWM Controller

POWER MANAGEMENT

Description

The SC2643 provides microprocessor core voltage regulation solution up to 4 paralleled PWM channels. The solution can also be configured as 2, 3, or 4-phase form. Multi-phase buck regulator utilizes the phase-shift timing control to allow interleaved switching of the power switches. This architecture minimizes the core voltage ripple and the input current ripple, which leads to optimized voltage regulator design for power density, transient responses, and the thermal performances.

To satisfy the highly dynamic nature of the modern microprocessors, the SC2643 adopts peak current mode control topology which ensures wide control loop bandwidth and fast transient responses. The current mode control provides intrinsic phase current matching. The maximum ripple frequency is greater than 4MHz.

One of the outstanding features of the SC2643 is its voltage regulation accuracy. Not only it provides better than 0.5% set point accuracy, but also the accuracy to fully complaint with the stringent load line specifications mandated by the modern microprocessors. Lossless output current sensing ensures that the regulator output voltage is accurately positioned according to the load current condition, and an internal temperature compensation technology further enhances the performance of voltage accuracy.

The patented Combi-Sense™ topology is employed by SC2643. The MOSFET $R_{ds(on)}$ and the output inductor winding resistance are used to generate the phase current information. SEMTECH Combi-Sense™ MOSFET driver plus the SC2643 enables the complete solution.

The cycle-by-cycle current limit plus the intelligent over current shut down provide the maximum versatility of the system without false tripping under all possible changes of VID and load conditions. The differential voltage feedback sense eliminates the error caused by high load current on the ground plane. The enable function is also provided to interface with the corresponding system signal for correct start up timing and shut down timing.

(Multiple Patents Pending)

Features

- VRD/VRM10 compliant
- Core Voltage Set Point Accuracy 0.5% over Life, Line, and Temperature
- Combi-Sense™ Current Mode Control
- Intrinsic Phase Current Matching
- Fast Transient Responses
- Active Droop to Meet Load Line Slope
- Threshold Sensitive Enable Function for Power Sequencing
- Cycle-by-Cycle Peak Current Limit
- Intelligent Over Current Shut Down
- Over Voltage Protection When Using Semtech Combi-Sense™ Driver
- Under Voltage Protection Built in
- External programmable Soft-Start
- Externally programmable switching frequency (up to 1MHz per phase)
- 2, 3, or 4-Phase Configurations
- 24-Pin SOIC or TSSOP Packages

Applications

- Voltage Regulator VRD/VRM10.0
- Voltage regulation Modules
- High Current, Low Voltage Step Down DC/DC Converters

Typical Application Circuit

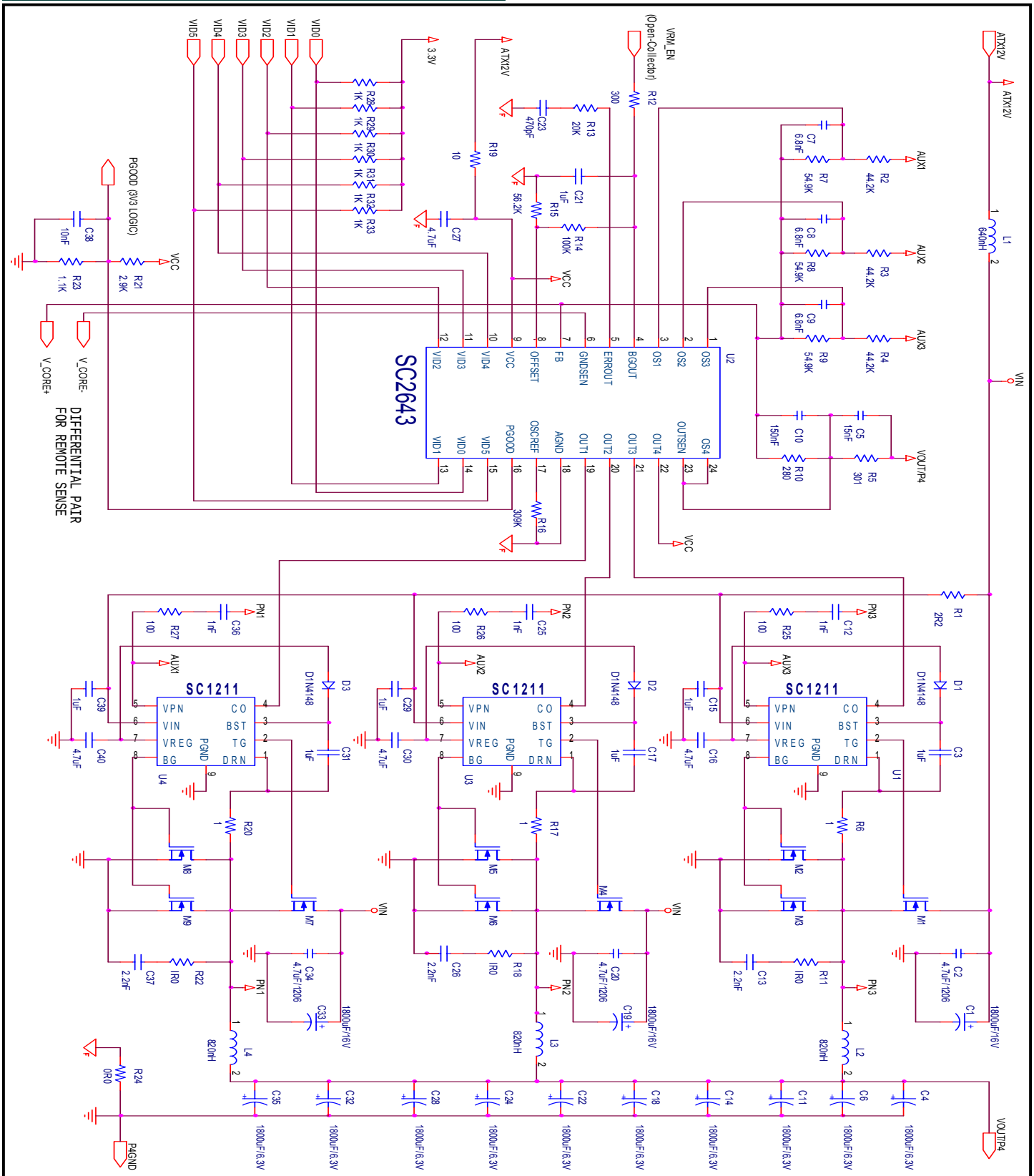

HIGH FREQUENCY
DECOUPLING NOT
SHOWN

Absolute Maximum Ratings

Exceeding the specifications below may result in permanent damage to the device, or device malfunction. Operation outside of the parameters specified in the Electrical Characteristics section is not implied.

Parameter	Symbol	Maximum	Units
Supply Voltage	V_{CC}	20	V
Combi-Sense/Direct Output Voltage	OS1, OS2, OS3, OS4, OUTSEN	5	V
Ambient Temperature Range	T_A	0 to 85	°C
Junction Temperature Range	T_J	0 to 125	°C
Storage Temperature Range	T_{STG}	-65 to +150	°C
Lead Temperature (Soldering) 10 Sec.	T_{LEAD}	260	°C

Electrical Characteristics

Unless specified: V_{CC} = 12V, VID=1.30V (110110) or 1.50V (101110), F_{OSC} = 600kHz, T_A = 27°C. See Typical Application Circuit.

Parameter	Symbol	Test Conditions	Min	Typ	Max	Units
Chip_Supply						
IC Supply Voltage	V_{CC}		7.5	12	14	V
IC Supply Current	I_{CC}			10		mA
UVLO Ramp Up				7.3	7.5	V
UVLO Ramp Down				6.6		V
Reference Section						
Bandgap Output	V_{BGOUT}	C_{BGOUT} = 4.7nF		1.5		V
Source Current				300		µA
Sink Current				-300		µA
Supply Rejection		V_{CC} = 10.0V ~ 14.0V		0.5		mV/V
Temperature Stability		0°C < T_A < 85°C		0.5		%
VID Step				12.5		mV
Voltage Accuracy	V_{OUT}	V_{OFFSET}=0.5V_{BGOUT}	-0.5		+0.5	%
Oscillator Section						
Oscillator Frequency	F_{OSC}	R_{OSC} = 309K	540	600	660	kHz
Oscillator Frequency Range	F_{OSC}		500		4000	kHz
Temperature Stability		0°C < T_A < 85°C		±5		%

Electrical Characteristics (Cont.)

Unless specified: V_{CC} = 12V, F_{OSC} = 600kHz, T_A = 27°C. See Typical Application Circuit.

Parameter	Test Conditions	Min	Typ	Max	Units
Voltage Error Amplifier					
Input Offset Voltage			±3		mV
Input Bias Current			25		nA
Open Loop Gain	1V < V_{ERROUT} < 4V		80		dB
Unity Gain Bandwidth	C_{ERROUT} = 10pF		10		MHz
Slew Rate			10		V/µS
Transconductance Gain			0.76		mA/V
Current Sense Amplifiers					
Input Offset Voltage			±3		mV
Input Bias Current			50		nA
Gain			9.85		V/V
CMRR	0 to 3V		80		dB
Input Common Mode Range		-0.3		3	V
Gain Match			2		%
Bandwidth			6		MHz
Droop Amplifier					
Gain			7.56		V/V
VIDs					
Logic Threshold	[VID0:5]	1.2		1.8	V
Pull-up Impedance	[VID0:5]		10		Kohm
CPU OFF Threshold	[VID0:4]		3		V
3-Phase Operation					
Output 4 pull up Threshold			3.7		V
Power Good					
Threshold Rising	VID - Power Good Threshold		340		mV
Threshold Falling	VID - Power Good Threshold		400		mV
Output High Leakage	Pwrgood = V_{CC}		60		nA
Output Low Sink	Pwrgood = 0.8V	2			mA
Current Limit Section					
Max. Error Amp Voltage for Current Limit			4.4		V
S	VID - Shut Down Threshold		430		mV

Pin Configurations

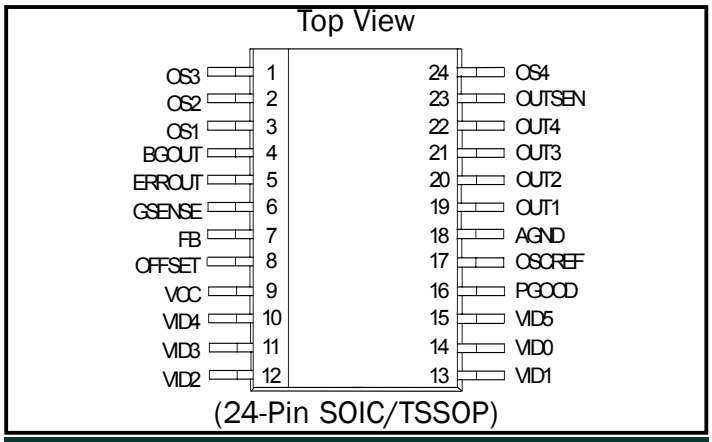

Ordering Information

Part Number	Package	Temp. Range (T_J)
SC2643SWTR (1)	SOIC-24	0 to 125 °C
SC2643TSTR (1)	TSSOP-24	0 to 125 °C
SC2643EVB (2)	Evaluation Board	

Note:
(1) Only available in tape and reel packaging. A reel contains 1000 devices for the SOIC-24 and 2500 devices for the TSSOP-24 package.
(2) Specify SOIC-24 or TSSOP-24 package.

Pin Descriptions

Pin#	Pin Name	Pin Function
1	OS3	Combi-SenseCurrent 3.
2	OS2	Combi-Sense Current 2. Connect to OUTSEN for 2 phase operation
3	OS1	Combi-Sense Current 1.
4	BGOUT	BG reference pin. Pull down this pin with an open collector signal will disable the output. Refer to the typical application circuit.
5	ERROUT	Error-amplifier output.
6	GSENSE	Remote sense for GND.
7	FB	Feedback pin.
8	OFFSET	Offset setting pin.
9	VCC	Power supply for chip.
10	VID4	VID MSB.
11	VID3	
12	VID2	
13	VID1	
14	VID0	VID LSB.
15	VID5	12.5mV bit.
16	PGOOD	Power good.
17	OSCREF	Oscillator frequency setting.
18	AGND	Clean ground for analog.
19	OUT1	PWM output1.
20	OUT2	PWM output2.
21	OUT3	PWM output3.
22	OUT4	PWM output4. Connect to VCC for 3 phase operation.
23	OUTSEN	Direct output sense.
24	OS4	Combi-Sense Current 4. Connect to OUTSEN for 2 or 3 phase operation.

Block Diagram

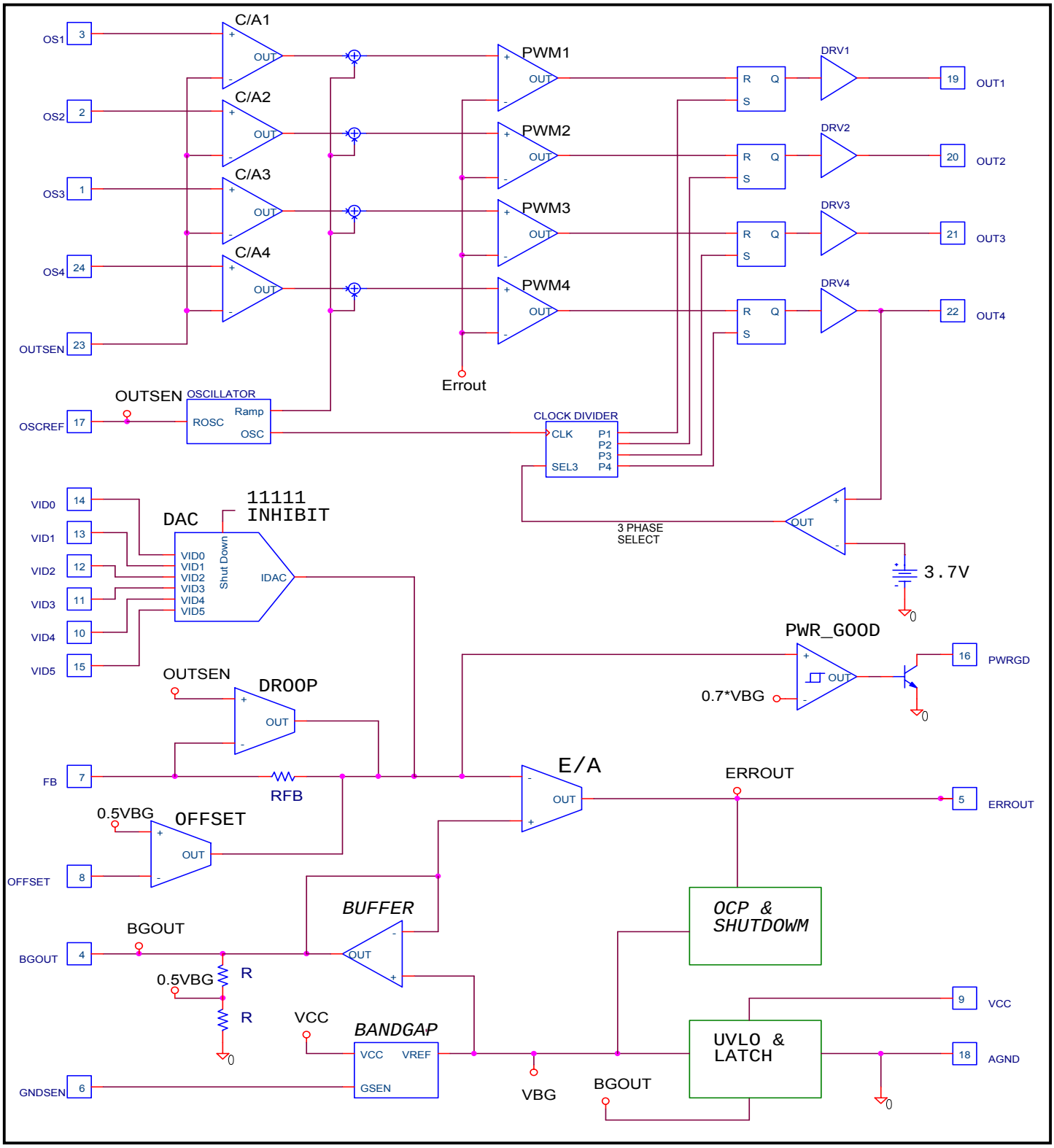

Applications Information- Output Voltage

VRD10 Output Voltage						
Unless specified: 0 = GND; 1 = High. T_A = 25°C, V_{CC} = 12V						Vout (V)
VID5	VID4	VID3	VID2	VID1	VID0	
0	0	1	0	1	0	0.8375
1	0	1	0	0	1	0.8500
0	0	1	0	0	1	0.8625
1	0	1	0	0	0	0.8750
0	0	1	0	0	0	0.8875
1	0	0	1	1	1	0.9000
0	0	0	1	1	1	0.9125
1	0	0	1	1	0	0.9250
0	0	0	1	1	0	0.9375
1	0	0	1	0	1	0.9500
0	0	0	1	0	1	0.9625
1	0	0	1	0	0	0.9750
0	0	0	1	0	0	0.9875
1	0	0	0	1	1	1.0000
0	0	0	0	1	1	1.0125
1	0	0	0	1	0	1.0250
0	0	0	0	1	0	1.0375
1	0	0	0	0	1	1.0500
0	0	0	0	0	1	1.0625
1	0	0	0	0	0	1.0750
0	0	0	0	0	0	1.0875
1	1	1	1	1	1	OFF
0	1	1	1	1	1	OFF
1	1	1	1	1	0	1.1000
0	1	1	1	1	0	1.1125
1	1	1	1	0	1	1.1250
0	1	1	1	0	1	1.1375
1	1	1	1	0	0	1.1500
0	1	1	1	0	0	1.1625
1	1	1	0	1	1	1.1750
0	1	1	0	1	1	1.1875
1	1	1	0	1	0	1.2000
0	1	1	0	1	0	1.2125
1	1	1	0	0	1	1.2250
0	1	1	0	0	1	1.2375
1	1	1	0	0	0	1.2500
0	1	1	0	0	0	1.2625
1	1	0	1	1	1	1.2750
0	1	0	1	1	1	1.2875
1	1	0	1	1	0	1.3000
0	1	0	1	1	0	1.3125
1	1	0	1	0	1	1.3250
0	1	0	1	0	1	1.3375
1	1	0	1	0	0	1.3500
0	1	0	1	0	0	1.3625
1	1	0	0	1	1	1.3750
0	1	0	0	1	1	1.3875
1	1	0	0	1	0	1.4000
0	1	0	0	1	0	1.4125
1	1	0	0	0	1	1.4250
0	1	0	0	0	1	1.4375
1	1	0	0	0	0	1.4500
0	1	0	0	0	0	1.4625
1	0	1	1	1	1	1.4750
0	0	1	1	1	1	1.4875
1	0	1	1	1	0	1.5000
0	0	1	1	1	0	1.5125
1	0	1	1	0	1	1.5250
0	0	1	1	0	1	1.5375
1	0	1	1	0	0	1.5500
0	0	1	1	0	0	1.5625
1	0	1	0	1	1	1.5750
		1	0	1	1	1.5875
		1	0	1	0	1.6000

Outline Drawing - SOIC-24

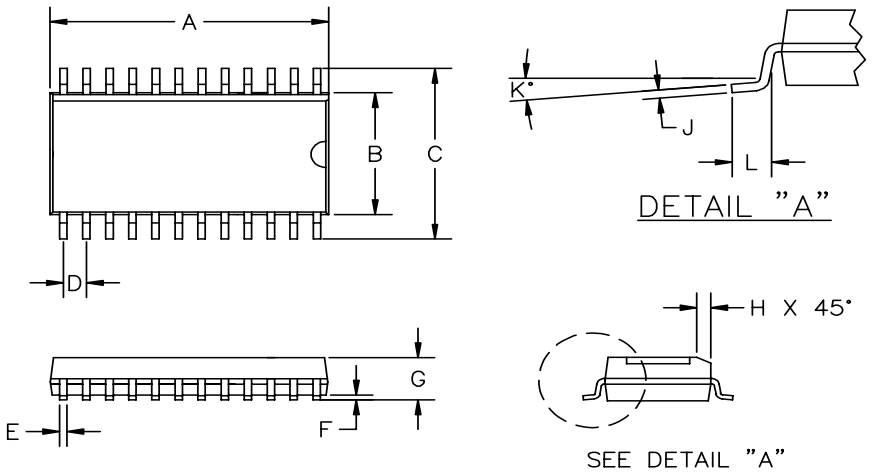

DIMENSIONS [1]					
DIMN	INCHES		MM		NOTE
	MIN	MAX	MIN	MAX	
A	.5985	.6141	15.20	15.60	[2]
B	.2914	.2992	7.40	7.60	[2]
C	.394	.419	10.00	10.64	–
D	.050 BSC		1.27 BSC		–
E	.013	.020	.33	.51	–
F	.004	0.118	.10	.30	–
G	.0926	.1043	2.35	2.64	–
H	.010	.029	.25	.74	–
J	.0091	.0125	.23	.32	–
K	0°	8°	0°	8°	–
L	.016	.050	.41	1.27	–

[2] DIMENSIONS A AND B DO NOT INCLUDE MOLD PROTUSIONS

[1] CONTROLLING DIMENSION : MILLIMETERS.

Land Pattern - SOIC-24

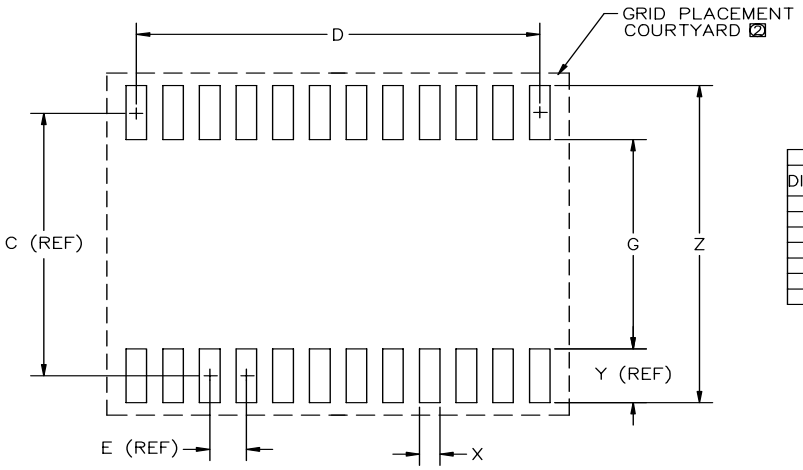

DIMENSIONS [1]					
DIMN	INCHES		MM		NOTE
	MIN	MAX	MIN	MAX	
C	–	.425	–	10.8	REF
D	–	.55	–	13.97	–
E	–	.05	–	1.27	BSC
G	.338	.342	8.60	8.68	–
X	–	.024	–	.60	–
Y	–	.087	–	2.20	REF
Z	–	.52	–	13.0	–

[2] GRID PLACEMENT COURTYARD IS 28 X 32 ELEMENTS (14mm X 16mm) IN ACCORDANCE WITH THE INTERNATIONAL GRID DETAILED IN IEC PUBLICATION 97.

[1] CONTROLLING DIMENSION: MILLIMETERS.

Outline Drawing - TSSOP-24

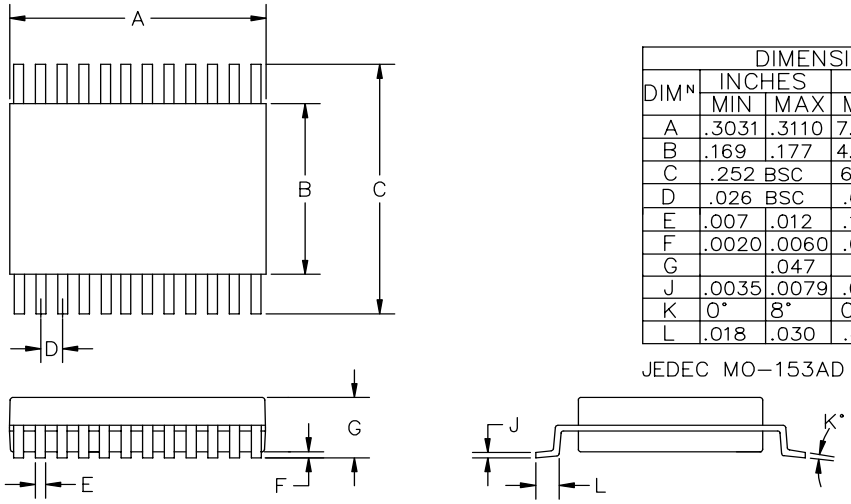

DIMENSIONS (1)					
DIMN	INCHES		MM		NOTE
	MIN	MAX	MIN	MAX	
A	.3031	.3110	7.70	7.90	(2)
B	.169	.177	4.30	4.50	(2)
C	.252 BSC		6.40 BSC		—
D	.026 BSC		.65 BSC		—
E	.007	.012	.19	.30	—
F	.0020	.0060	.05	.15	—
G		.047		1.20	—
J	.0035	.0079	.09	.20	—
K	0°	8°	0°	8°	—
L	.018	.030	.45	.75	—

JEDEC MO–153AD

(2) DIMENSIONS A AND B DO NOT INCLUDE MOLD PROTRUSIONS.

(1) CONTROLLING DIMENSIONS: MILLIMETERS.

Land Pattern - TSSOP-24

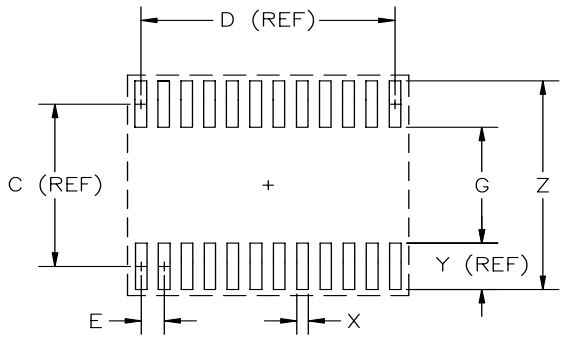

DIMENSIONS (1)					
DIMN	INCHES		MM		NOTE
	MIN	MAX	MIN	MAX	
C	—	.218	—	5.53	REF
D	—	.282	—	7.15	REF
E	—	.026	—	0.65	BSC
G	.155	—	3.947	—	—
X	—	.013	—	0.323	REF
Y	—	.062	—	1.583	—
Z	—	.280	—	7.113	—

(2) GRID PLACEMENT COURTYARD IS 16 X 15 ELEMENTS (8mm X 7.5mm) IN ACCORDANCE WITH THE INTERNATIONAL GRID DETAILED IN THE IEC PUBLICATION 97.

(1) CONTROLLING DIMENSIONS: MILLIMETERS.

Contact Information

Semtech Corporation
Power Management Products Division
200 Flynn Rd., Camarillo, CA 93012
Phone: (805)498-2111 FAX (805)498-3804