SAMPLE AND HOLD AMPLIFIERS

VERY HIGH SPEED MODELS 1410 — 1411

- LOW ACQUISITION TIME
  200nS max . . . 0.1% accuracy
  350nS max . . . 0.01% accuracy
- EXCELLENT LINEARITY
  Within ±0.003% max overall.
- OPTIONAL INPUT BUFFERING
  Model 1410 . . . unbuffered
  Model 1411 . . . buffered input
- FAST SETTLING
  100nS max to 0.01% F.S. (sample → hold)
- LOW APERTURE UNCERTAINTY
  100pS max
- MILITARY VERSIONS AVAILABLE
  . . . Consult factory

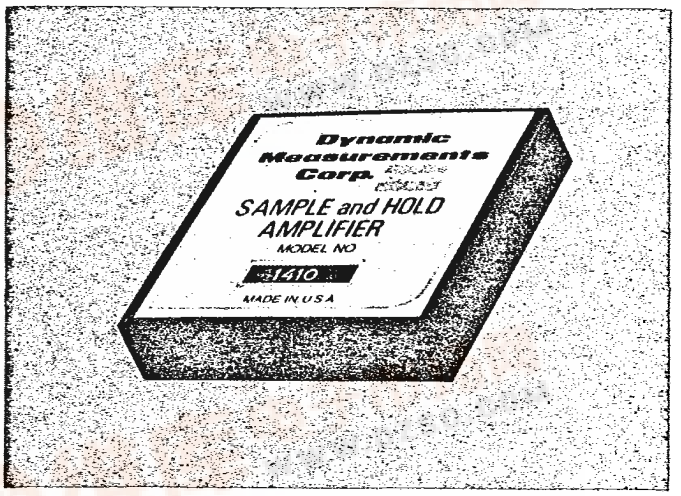

BLOCK DIAGRAM

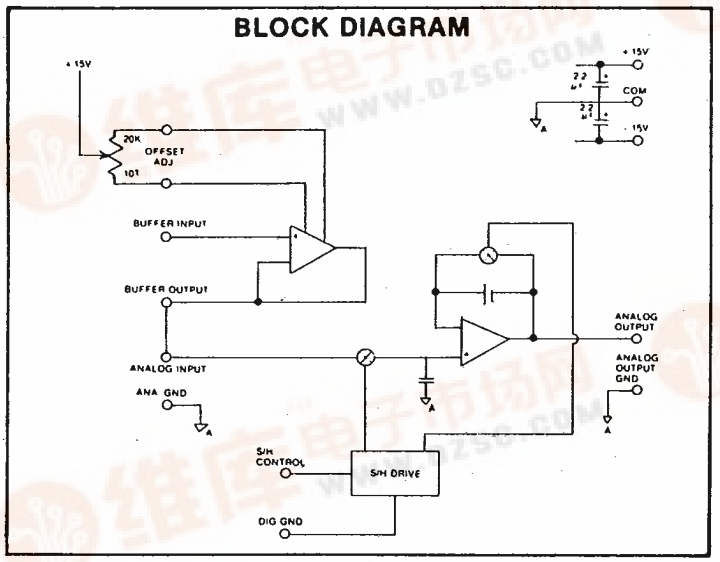

This design can easily exploit the speed capabilities of even the highest performance ADC's, such as DMC's 2850 series.

The specified linearity (within ±0.003% max) includes all error sources, such as sample mode non-linearity and pedestal offset variation.

The system is available with an input buffer, as Model 1411, to provide high impedance and to ease drive requirements.

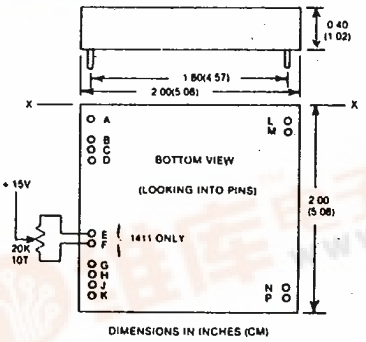

Pin	Function	Pin Center Distance From XX Inches (cm)
A	Key (no connection)	0.15 (0.38)
B	+15V	0.35 (0.89)
C	−15V	0.45 (1.14)
D	Common	0.55 (1.40)
E	Offset Adjust	1.25 (3.18)
F	Offset Adjust	1.35 (3.43)
G	Buffer Output	1.55 (3.94)
H	Analog Input	1.65 (4.19)
J	Analog Ground	1.75 (4.45)
K	Buffer Input	1.85 (4.70)
L	S/H Control	0.15 (0.38)
M	Digital Ground	0.25 (0.64)
N	Analog Output Ground	1.75 (4.45)
P	Analog Output	1.85 (4.70)

Connection Notes

1) When utilizing the input buffer option (Model 1411), the system input should be connected to Buffer Input (pin K), and the Buffer Output (pin G) should be connected to Analog Input (pin H).
2) With Model 1410 (no input buffer), the system input should be connected to Analog Input (pin H).
3) Reasonable care must be taken with these very high performance units, to minimize input noise pickup. Signal and control input leads should be shielded, and kept as short as possible.
4) The digital ground is independent of the analog grounds, and must be connected externally.

Dynamic Measurements Corp. 8 Lowell Avenue, Winchester, Massachusetts 01890
(617) 729-7870 Cable: DYMECO TWX (710) 348-6596
In the U.S.A. call DMC toll-free (800) 225-1151

OPERATING CHARACTERISTICS

(Typical and nominal at 25°C, unless otherwise noted)

ACCURACY	Non-linearity, overall including pedestal offset deviation Gain Dielectric absorption coefficient	±0.003% max 0.9999 min, 1.0000 max 1.5×10^{-4}
SAMPLE MODE	Input Signal Voltage Absolute Max Rating Small Signal Bandwidth Full Power Bandwidth Slew Rate Input Impedance 1410 1411 Settling Time To 0.01% for 10V step input To 0.1% for 10V step input Input Bias Current Noise Input Offset Voltage Offset Voltage vs Supply Offset Voltage T.C.	±10V DC ±Vcc 8MHz typ 1MHz min 80V/uS min, 100V/uS typ 50 ohms into 200pF ‖10^9 ohms 10^9 ohms **1410** **1411** 600nS max 650nS max 350nS max 400nS max 40nA max 0.1mV pp max @ 1MHz BW ±2mV max. 1411 has zero adjust 500uV/% typ 100uV/°C max
SAMPLE TO HOLD SWITCHING	Transient Settling to ±0.01% Aperture Delay Aperture Jitter (aperture uncertainty)	100nS max 10nS ±100pS max
HOLD MODE	Output Voltage Output Current Output Impedance Droop Rate (doubles every 10°C) Hold Offset (pedestal) Feedthrough Rejection (±10V sine wave @ 100 KHz)	±10V min ±20mA min 0.1 ohm max 10uV/uS max 10mV max 75dB min, 80dB typ
HOLD TO SAMPLE SWITCHING	Acquisition Time to 0.1% for 20V input step to 0.1% for 10V input step to 0.01% for 20V input step to 0.01% for 10V input step	**1410*** **1411** 150nS max 200nS max 75nS max 200nS max 200nS max 350nS max 100nS max 350nS max *When 1410 is driven by a near zero-impedance source
DIGITAL CONTROL INPUT	Type Sample Hold	TTL compatible, 2 logic loads Logic "1" Logic "0"
POWER REQUIREMENTS	+15V ±3% −15V ±3% Absolute Maximum Voltage Rating	25mA max (plus load current) 25mA max (plus load current) ±18V
ENVIRONMENTAL	Warm-up Time Operating Temperature Relative Humidity Storage Temperature	3 Minutes min Full ratings (0 to +70°C), 50% derating (−25°C to +85°C) 0 to 95% non-condensing −55°C to +85°C
MECHANICAL	Module Size Weight	2" x 2" x 0.4" 42 grams

DMC Mating Socket is Model 6524 (2 req'd.)

Dynamic Measurements Corp. 8 Lowell Avenue, Winchester, Massachusetts 01890
(617) 729-7870 Cable: DYMECO TWX (710) 348-6596

In the U.S.A. call DMC toll-free (800) 225-1151