查询HR601681 供应商 捷多邦，专业PCB打样工厂，24小时加急出货

HanRun

LAN PRODUCTS

10/100BASE-TX TRANSFORMER MODULES

- Small form factor for board layout efficiency
- Minimum Isolation Voltage: 1500 Vrms
- Meets all IEEE802.3 and ANSI X3.263 standards including 350 uH Minimum OCL with 8 mA bias

ELECTRICAL SPECIFICATIONS

Single Port

Part Number	Turns Ratio TX	Turns Ratio RX	Insertion Loss 0.3-100MHz(dB Min)	Return Loss (dB Max) 1-30MHz	60MHz	80MHz	Crosstalk(dB Max) 30MHz	60MHz	100MHz	Isolation (Vrms Min)	Form/ Schematic
HR601680	1CT:1CT	1CT:1CT	-1.1	-18	-13	-11	-40	-30	-30	1500	A(SMT)/1
HR601681	1CT:1CT	1CT:1CT	-1.1	-16	-12	-11	-40	-30	-30	1500	A(SMT)/2
HR601231	1:1CT	1CT:1CT	-1.0	-16	-14	-12	-50	-45	-40	1500	B(SMT)/3
HR60H50S	1:1CT	1CT:1CT	-1.0	-18	-16	-12	-50	-45	-40	1500	C(SMT)/4
HR61H40L	1CT:1CT	1CT:1CT	-1.1	-18	-13	-11	-40	-30	-30	1500	D(THT)/1
HR611661	1CT:1CT	1CT:1CT	-1.1	-18	-13	-11	-40	-30	-30	1500	D(THT)/5

Dual Port

Part Number	Turns Ratio TX	Turns Ratio RX	Insertion Loss 0.3-100MHz(dB Min)	Return Loss (dB Max) 1-30MHz	60MHz	80MHz	Crosstalk(dB Max) 30MHz	60MHz	100MHz	Isolation (Vrms Min)	Form/ Schematic
HR602459	1CT:1CT	1CT:1CT	-1.1	-18	-13	-11	-40	-40	-35	1500	E(SMT)/6
HR604007	1:1CT	1CT:1CT	-1.1	-16	-12	-11	-45	-40	-35	1500	F(SMT)/7
HR612004	1CT:1CT	1CT:1CT	-1.1	-16	-12	-11	-45	-40	-35	1500	G(THT)/8
HR612081	1CT:1CT	1:1	-1.1	-18	-14	-12	-45	-30	-35	1500	H(THT)/9

Quad Port

Part Number	Turns Ratio TX	Turns Ratio RX	Insertion Loss 0.3-100MHz(dB Min)	Return Loss (dB Max) 1-30MHz	60MHz	80MHz	Crosstalk(dB Max) 30MHz	60MHz	100MHz	Isolation (Vrms Min)	Form/ Schematic
HR604004	1CT:1CT	1:1	-1.1	-18	-13	-11	-40	-40	-30	1500	F(SMT)/10
HR604005	1CT:1CT	1:1	-1.1	-18	-12	-11	-40	-40	-30	1500	F(SMT)/11
HR604006	1CT:1CT	1:1	-1.1	-18	-12	-11	-40	-40	-30	1500	F(SMT)/12
HR604008	1CT:1CT	1:1	-1.1	-18	-14	-12	-40	-40	-30	1500	F(SMT)/13
HR604009	1CT:1CT	1CT:1CT	-1.1	-18	-14	-12	-40	-40	-30	1500	F(SMT)/14

Notes: 1.Common to Common Mode Rejection: 30 dB Minimum
2.Differential to Common Mode Rejection: 30 dB Minimum
3.SMT products meet IR 235° C peak requirement

中山市汉仁电子有限公司 HANRUN ELECTRONICS COMPANY LIMITED
Tel:(0760)2121067 2121679 Fax:(0760)2121065 E-mail:hanrun@pub.zhongshan.gd.cn http://www.hanrun.com

LAN PRODUCTS

10/100BASE-TX TRANSFORMER MODULES

Schematic

TYPE 1

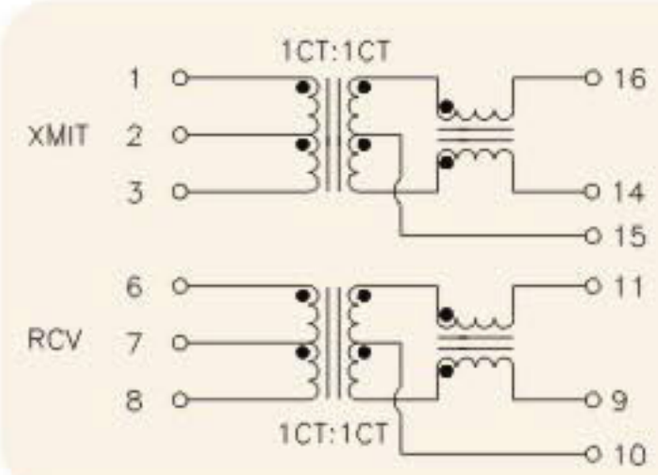

TYPE 2

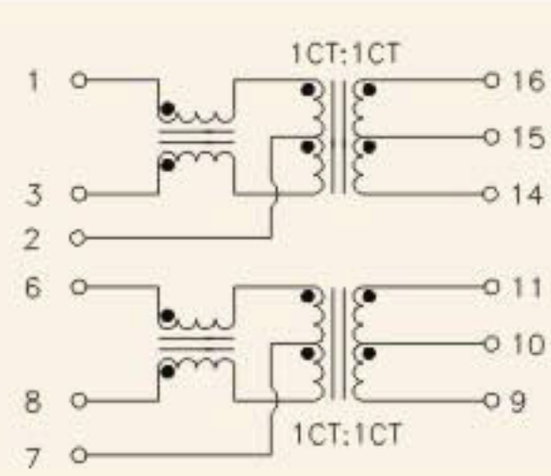

TYPE 3

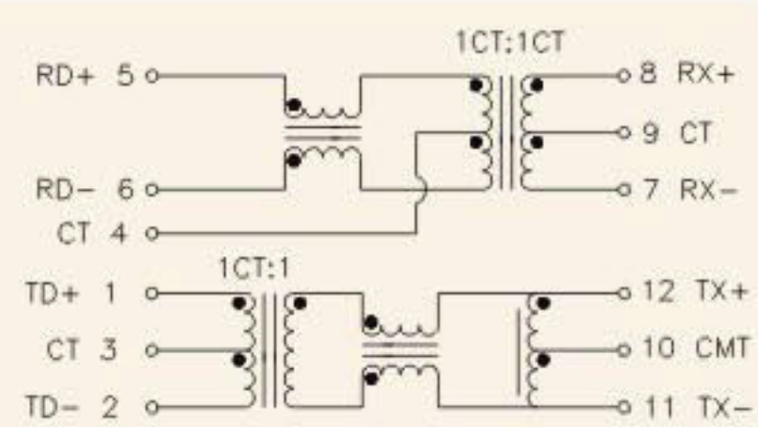

TYPE 4

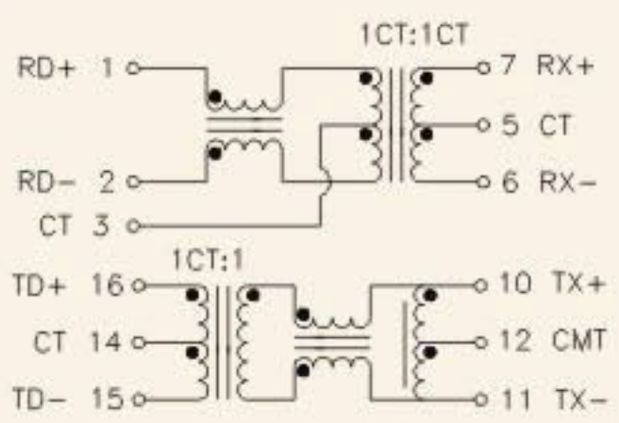

TYPE 5

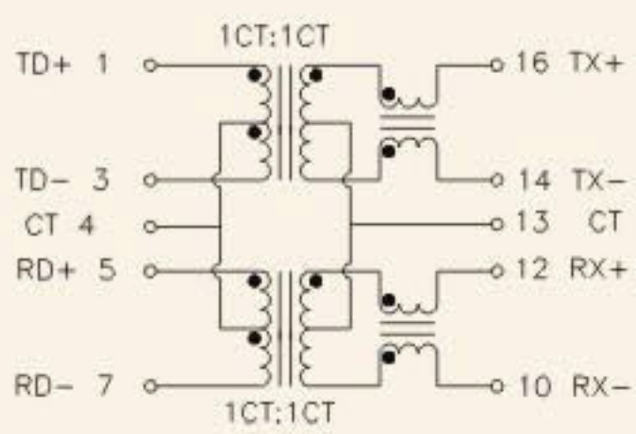

TYPE 6

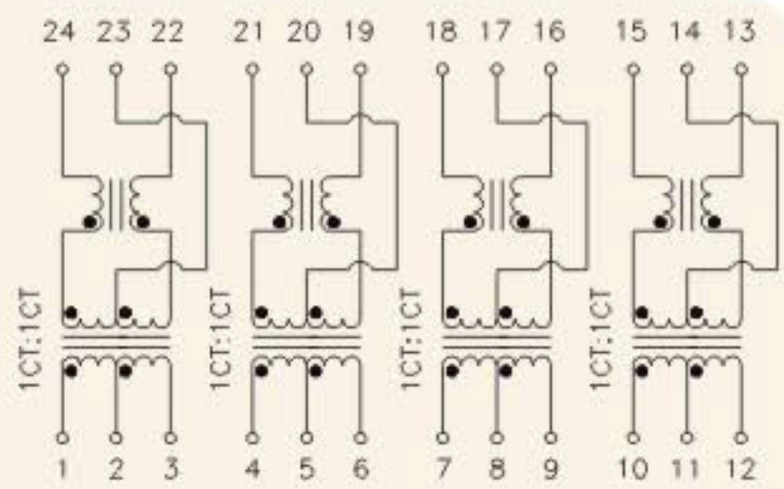

TYPE 7

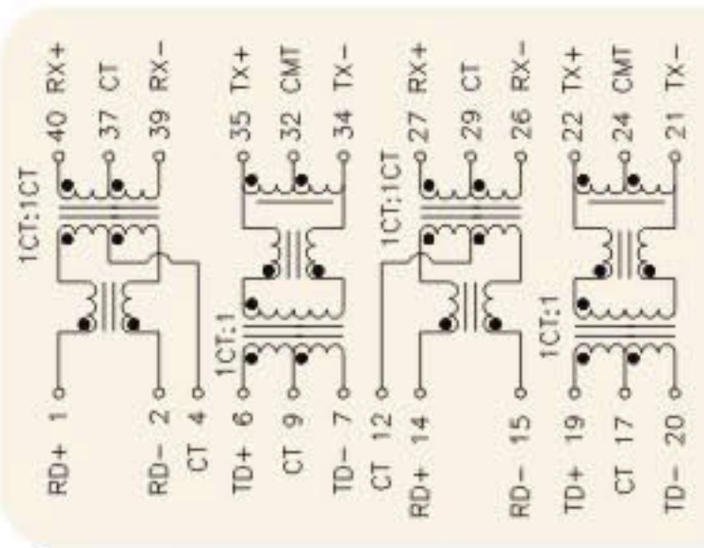

TYPE 8

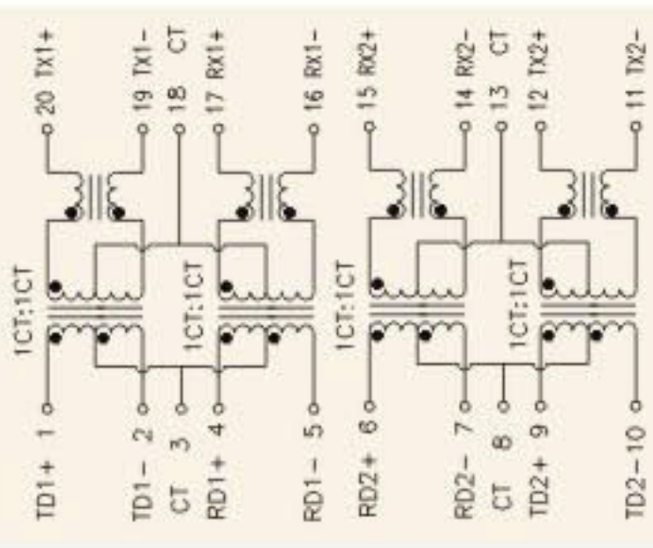

TYPE 9

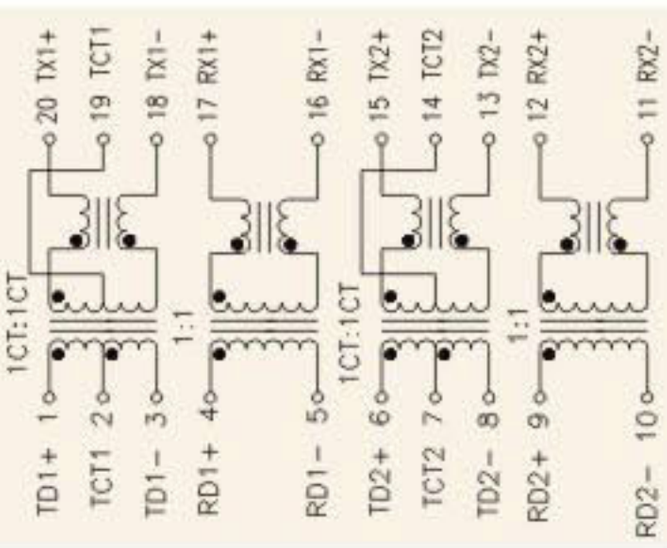

TYPE 10

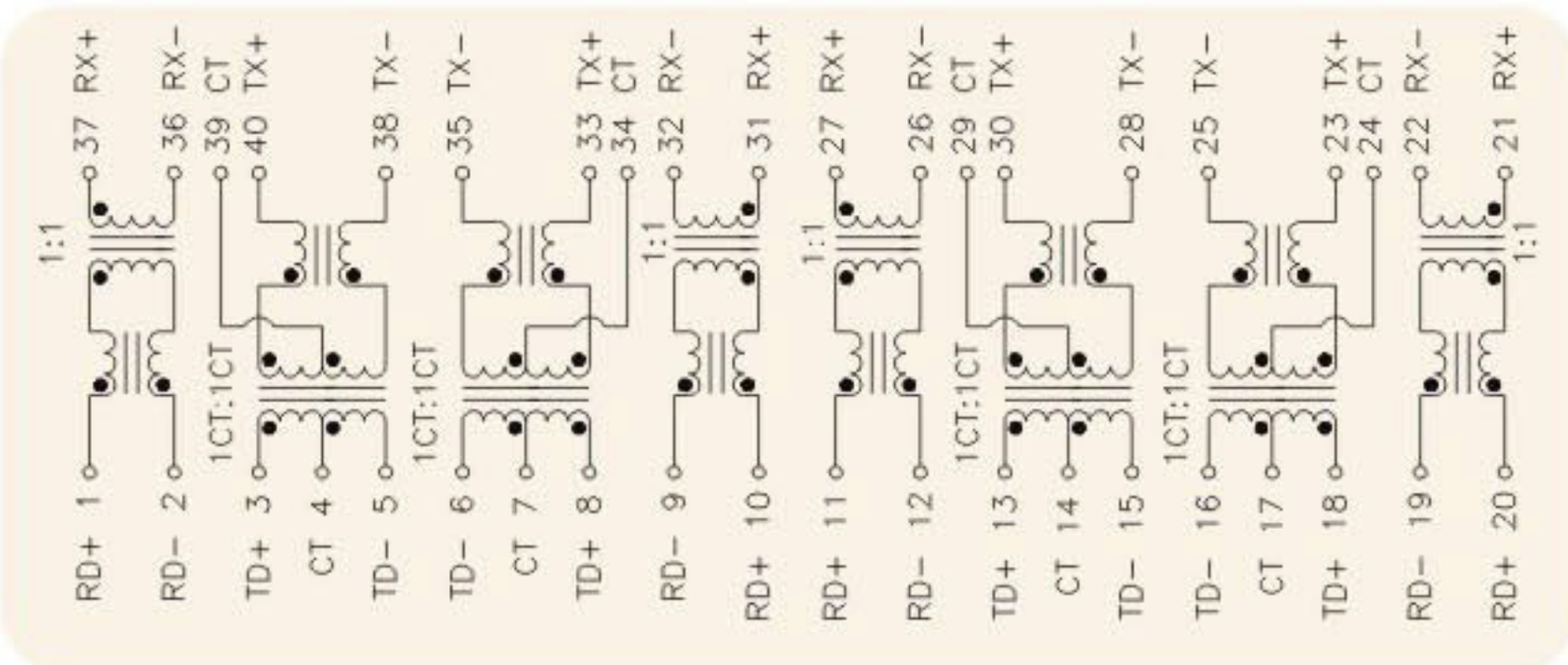

中山市汉仁电子有限公司 HANRUN ELECTRONICS COMPANY LIMITED
Tel:(0760)2121067 2121679 Fax:(0760)2121065 E-mail:hanrun@pub.zhongshan.gd.cn http://www.hanrun.com

LAN PRODUCTS

10/100BASE-TX TRANSFORMER MODULES

Schematic

TYPE 11

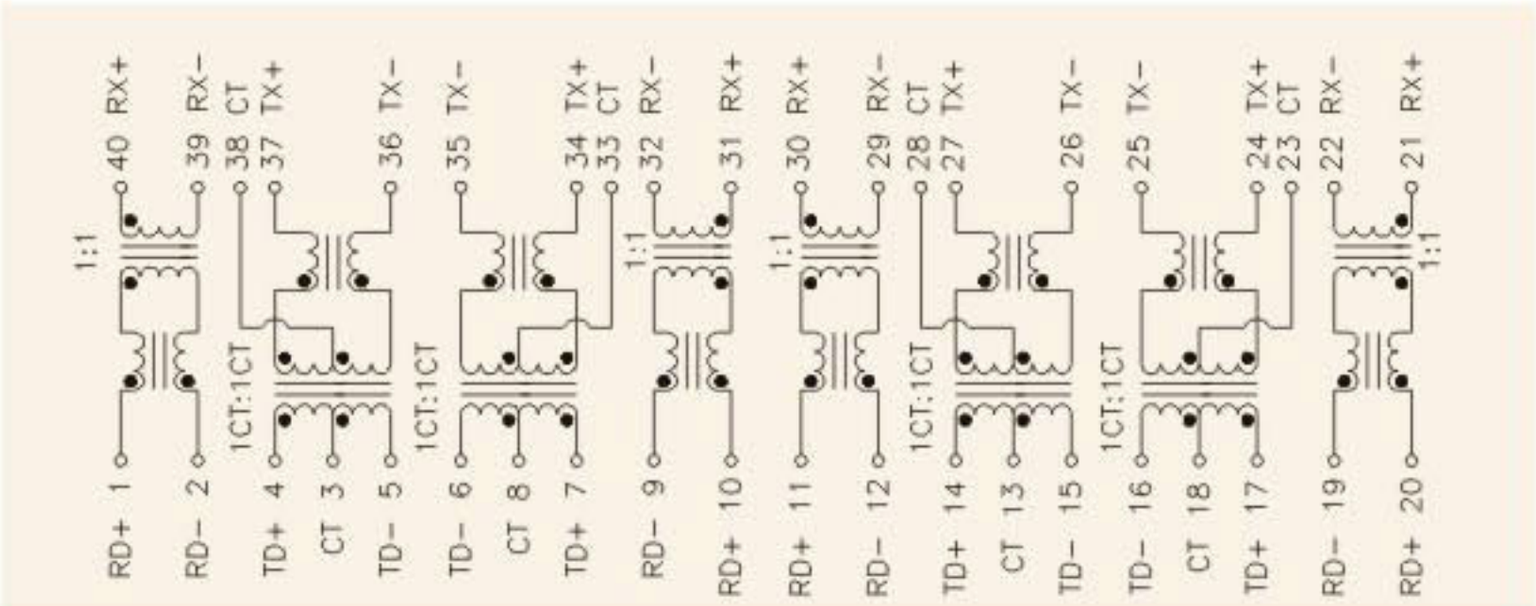

TYPE 12

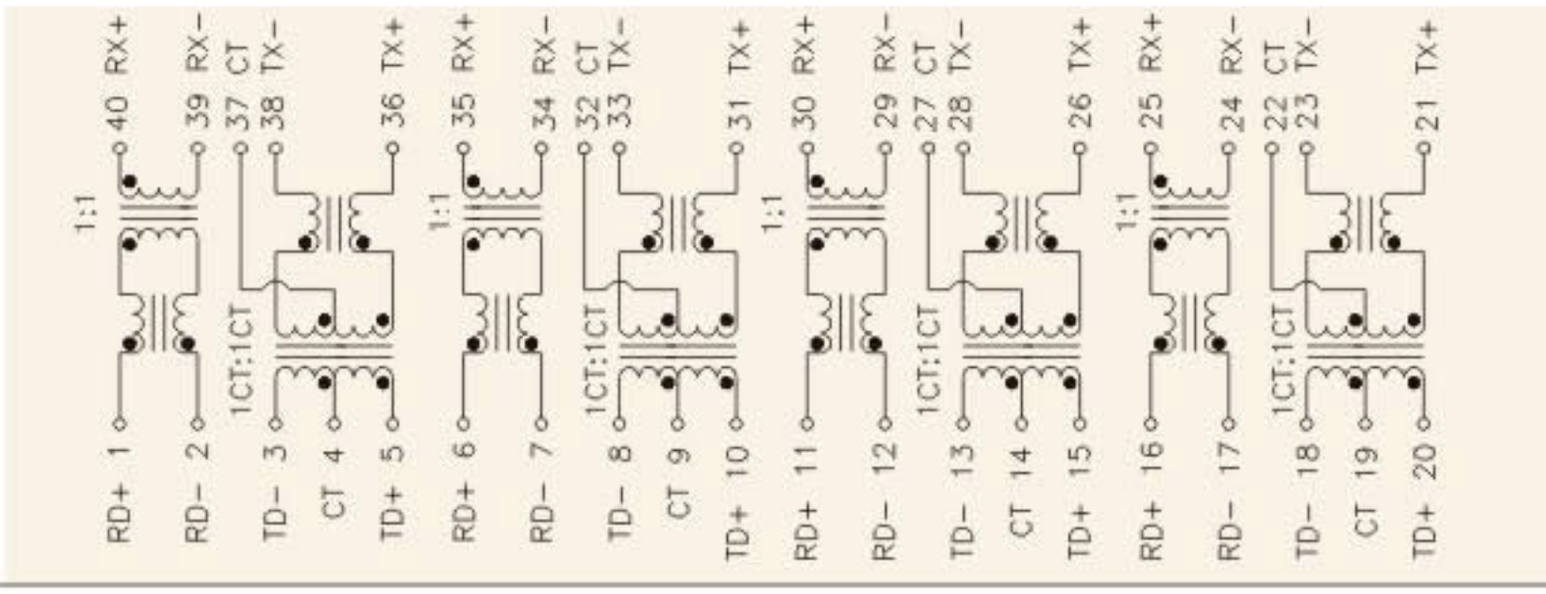

TYPE 13

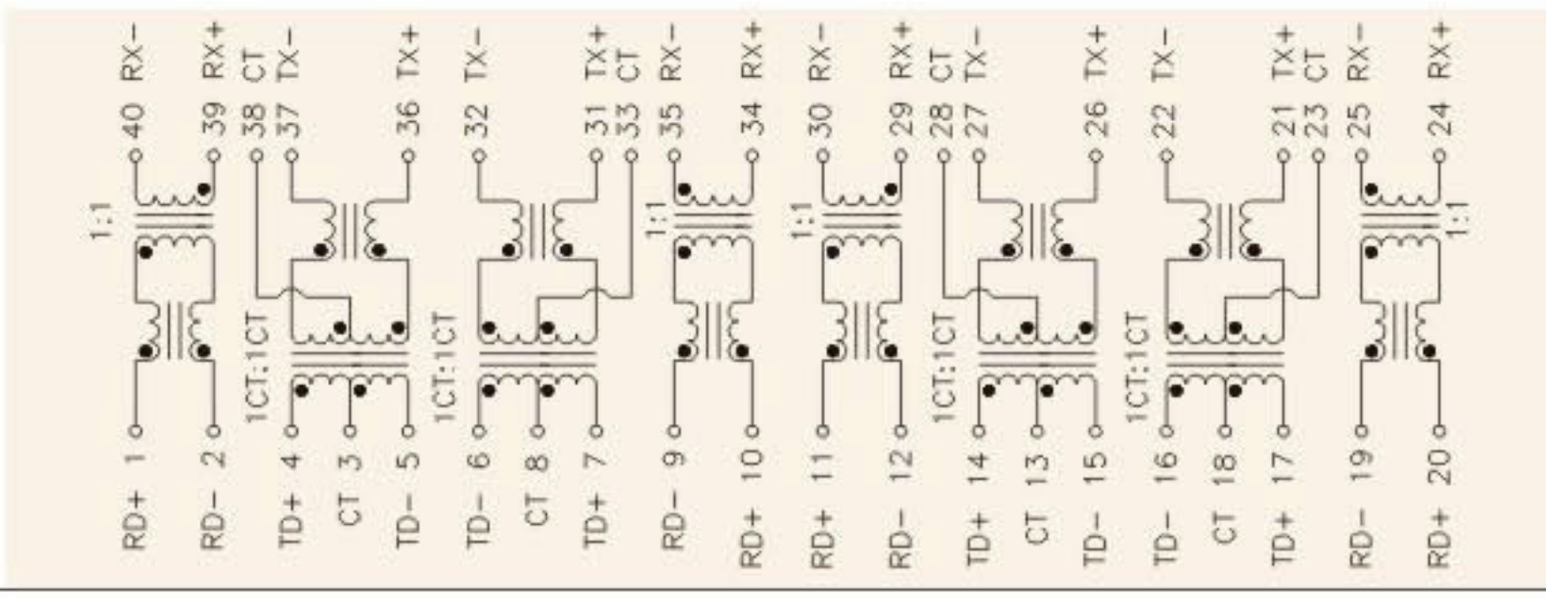

TYPE 14

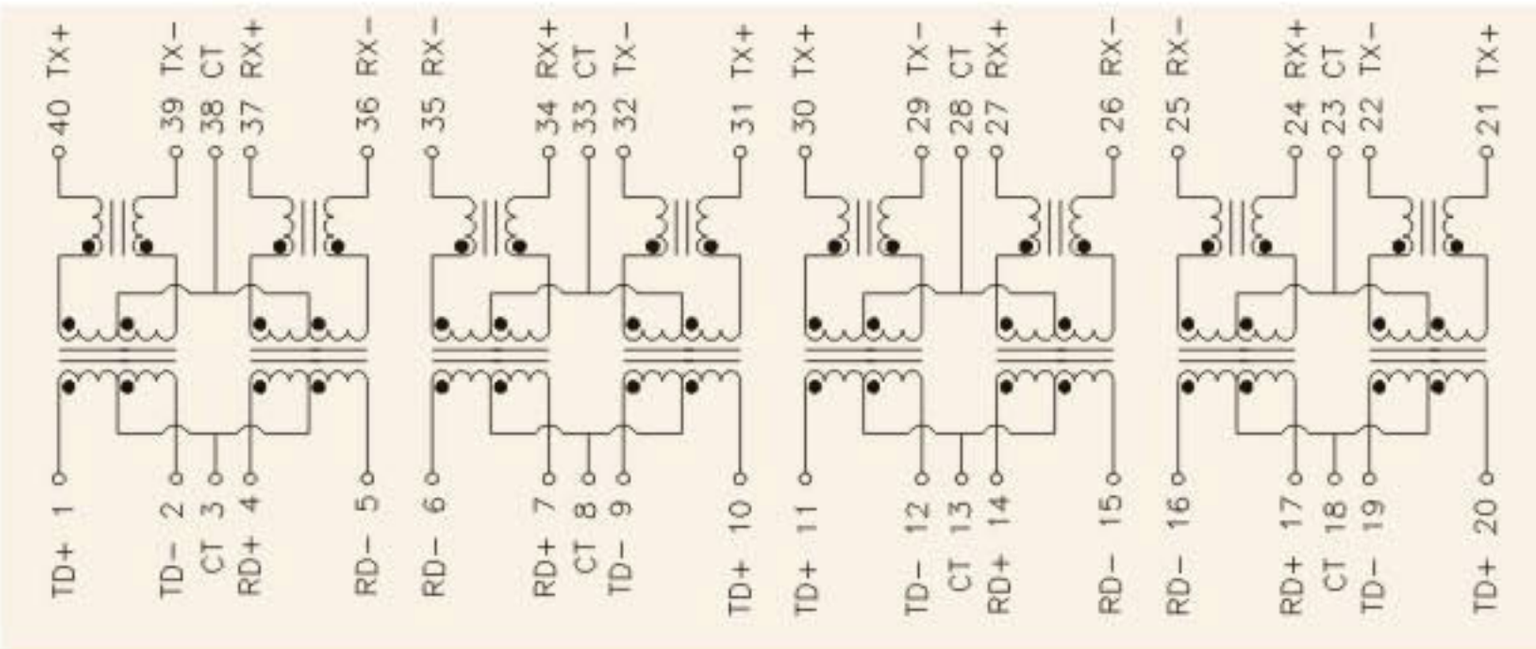

中山市汉仁电子有限公司 HANRUN ELECTRONICS COMPANY LIMITED
Tel:(0760)2121067 2121679 Fax:(0760)2121065 E-mail:hanrun@pub.zhongshan.gd.cn http://www.hanrun.com

LAN PRODUCTS

10/100BASE-TX TRANSFORMER MODULES

Mechanicals(inches)

A TYPE

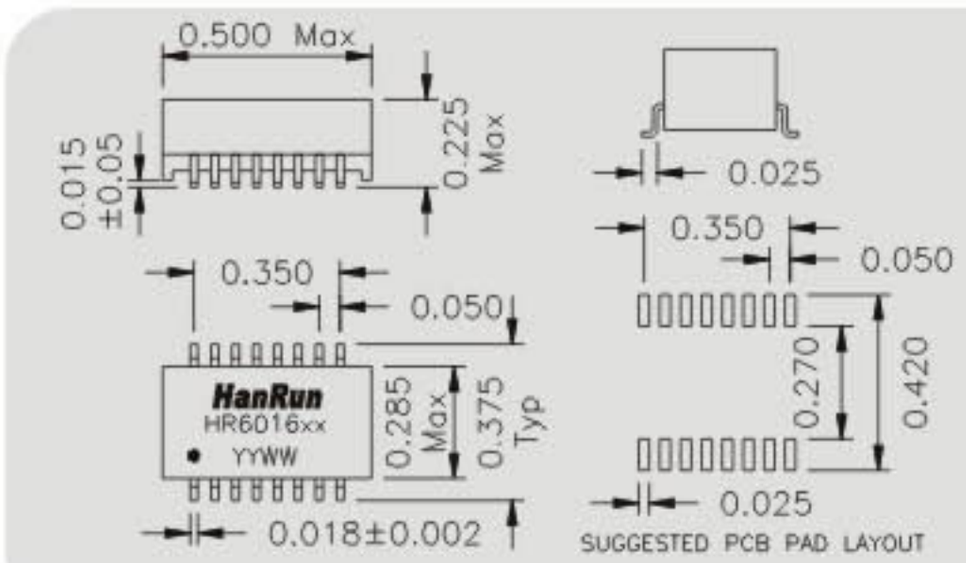

B TYPE

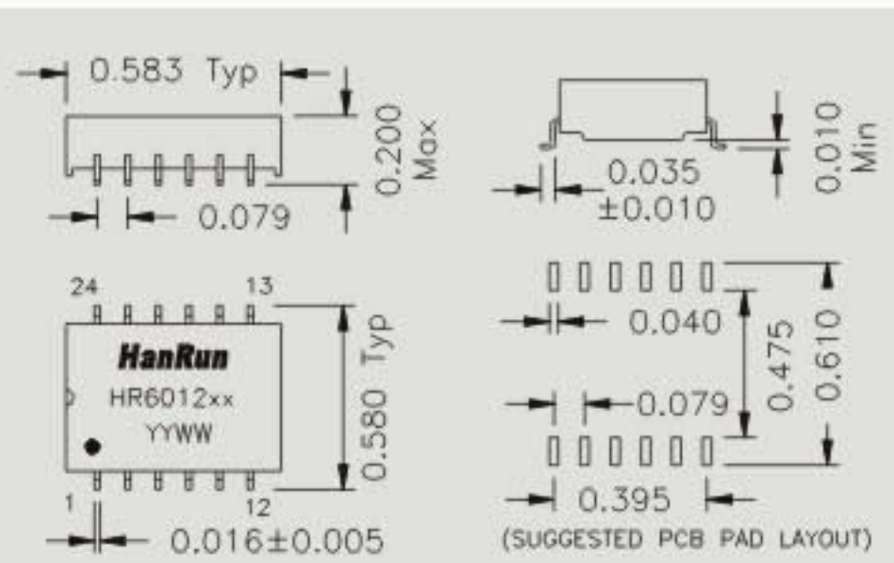

C TYPE

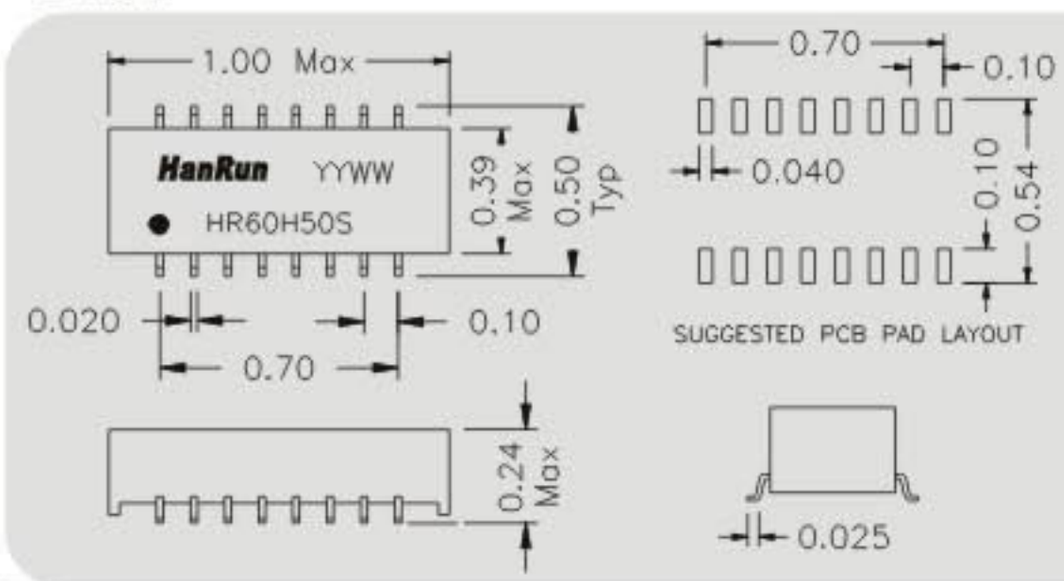

D TYPE

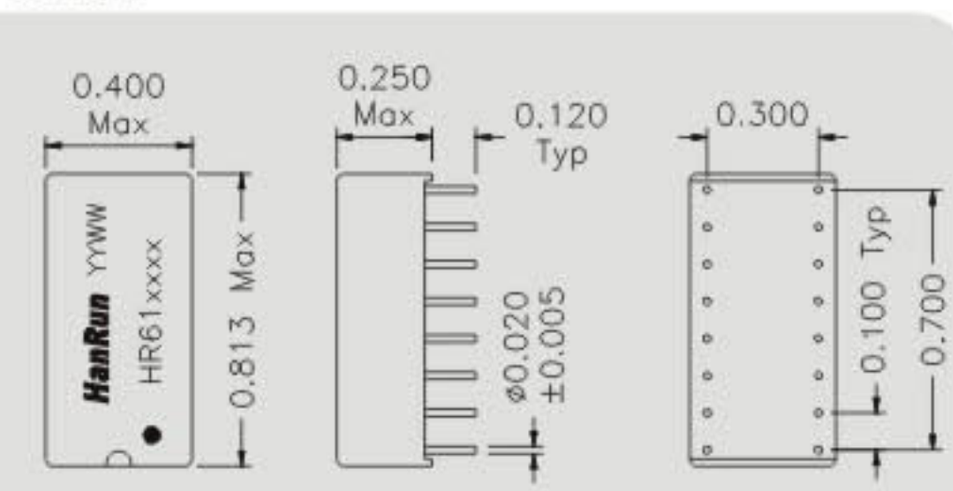

E TYPE

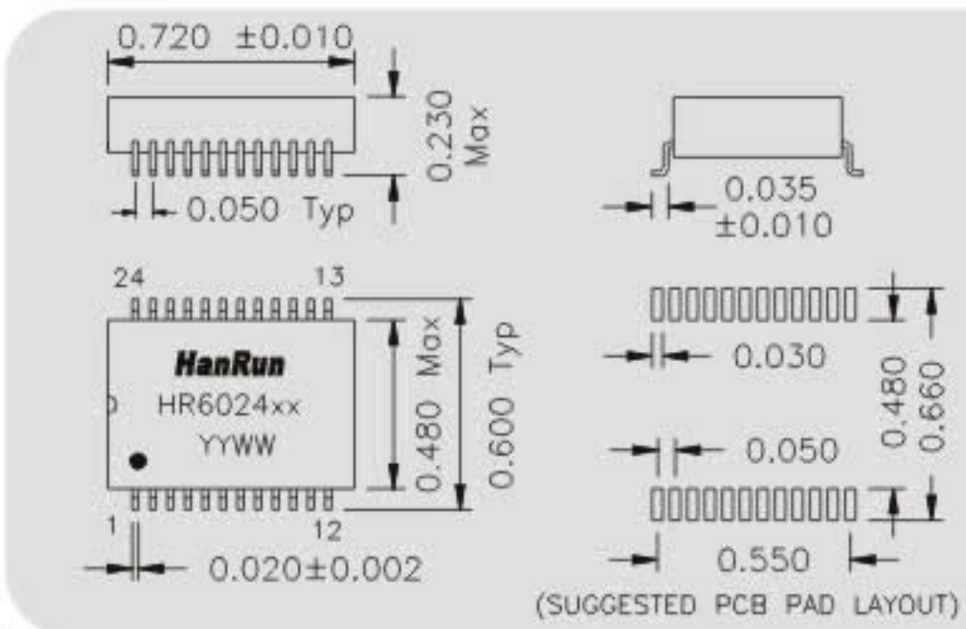

F TYPE

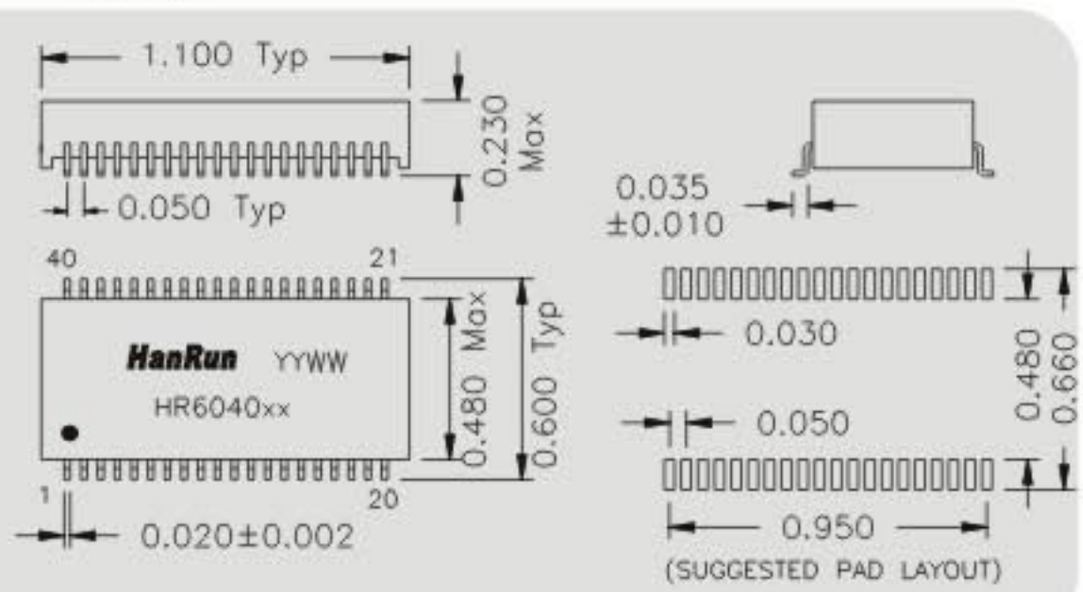

G TYPE

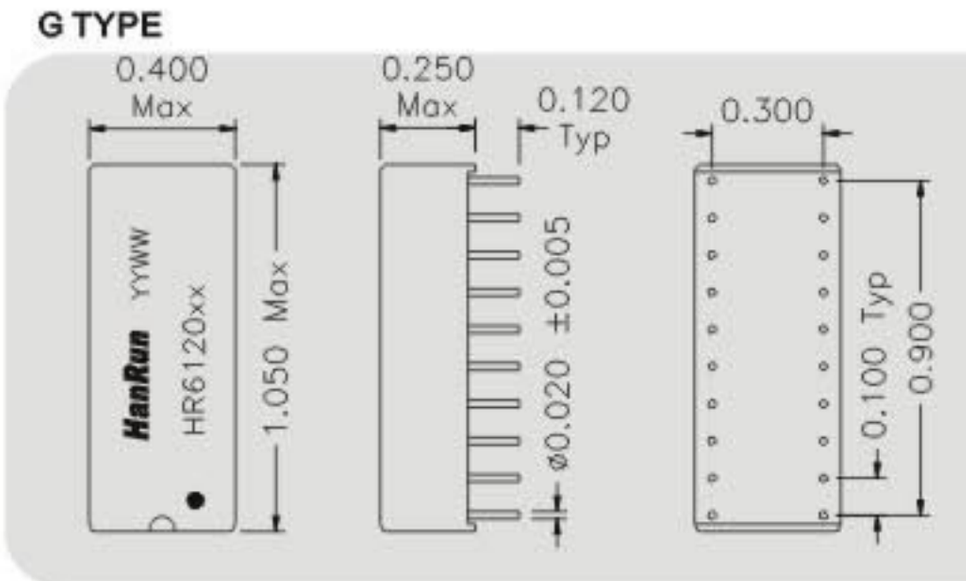

H TYPE

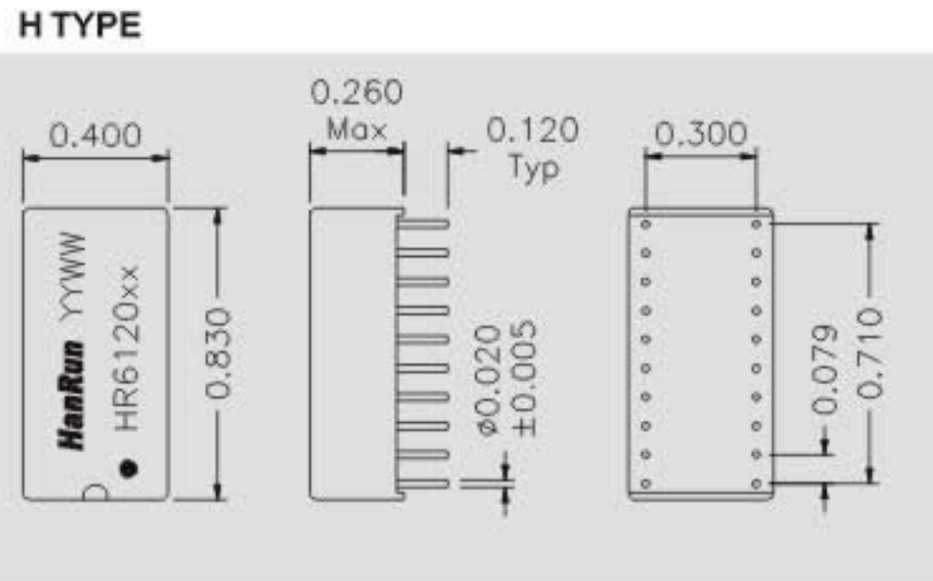

中山市汉仁电子有限公司 HANRUN ELECTRONICS COMPANY LIMITED
Tel:(0760)2121067 2121679 Fax:(0760)2121065 E-mail:hanrun@pub.zhongshan.gd.cn http://www.hanrun.com