查询TA8157AFN供应商 捷多邦，专业PCB打样工厂，24小时加急出货

TOSHIBA BIPOLAR LINEAR INTEGRATED CIRCUIT SILICON MONOLITHIC

TA8157AF, TA8157AFN

STEREO HEADPHONE POWER AMPLIFIER (1.5V USE)

The TA8157AF and TA8157AFN are developed for play-back stereo headphone equipments at low voltage operation (1.5V use). Those are built in bass boost function.

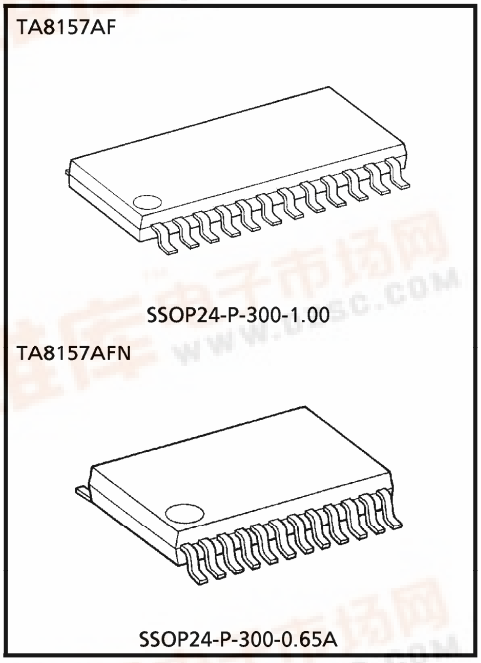

Weight
SSOP24-P-300-1.00 : 0.32g (Typ.)
SSOP24-P-300-0.65A : 0.14g (Typ.)

FEATURES

- OCL (Output Condenser Less)
- Built-in ripple filter
- Output power (V_{CC} = 1.5V, f = 1kHz, THD = 10%, R_L = 16Ω) P_O = 9mW (Typ.)
- Voltage gain : G_V = 24dB (Typ.)
- Built-in boost amplifier
- Built-in power switch
- Built-in muting circuit
- Low quiescent supply current (Ta = 25°C) I_{CCQ} = 8mA (Typ.)
- Excellent ripple rejection ratio : RR = 55dB (Typ.)
- Low noise : V_{no} = 25μV_{rms} (Typ.)
- Operating supply voltage range (Ta = 25°C) V_{CC} (opr) = 0.9~2.2V

BLOCK DIAGRAM

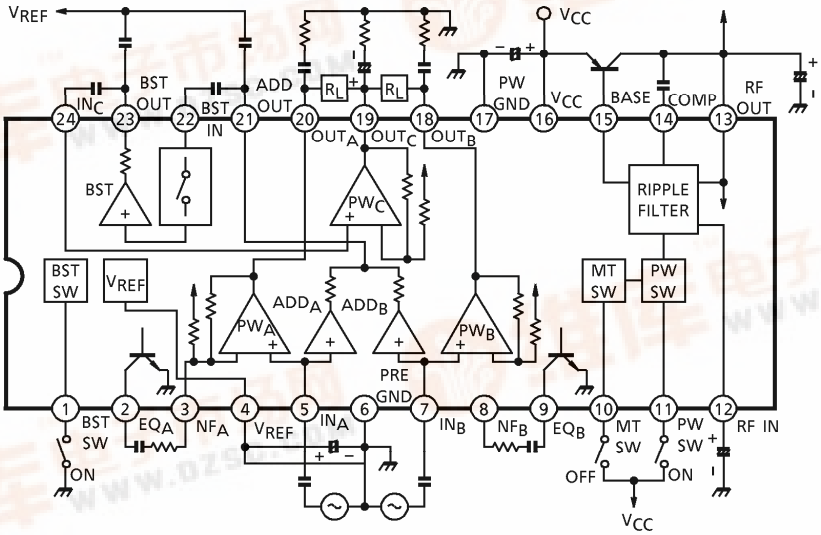

961001EBA2

● TOSHIBA is continually working to improve the quality and the reliability of its products. Nevertheless, semiconductor devices in general can malfunction or fail due to their inherent electrical sensitivity and vulnerability to physical stress. It is the responsibility of the buyer, when utilizing TOSHIBA products, to observe standards of safety, and to avoid situations in which a malfunction or failure of a TOSHIBA product could cause loss of human life, bodily injury or damage to property. In developing your designs, please ensure that TOSHIBA products are used within specified operating ranges as set forth in the most recent products specifications. Also, please keep in mind the precautions and conditions set forth in the TOSHIBA Semiconductor Reliability Handbook.

找PDF 维库一下 pdf.dzsc.com

TERMINAL EXPLANATION

(Terminal voltage : Typical terminal voltage at no signal with test circuit, V_{CC} = 1.2V, Ta = 25°C)

TERMINAL No.	TERMINAL NAME	FUNCTION	INTERNAL CIRCUIT	TERMINAL VOLTAGE (V)
1	BST SW	Boost amplifier on / off switch (Synchronized with equalizer circuit) (V_{CC} / OPEN : BST Amp. on GND : BST Amp. off)	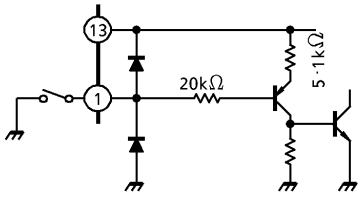	—
2	EQ_A	Equalizer circuit (controlled by BST SW) On resistance : 60Ω (Typ.)	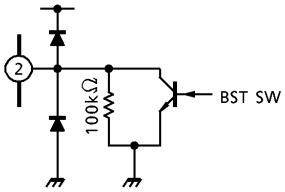	—
9	EQ_B			
4	V_{REF}	Reference voltage	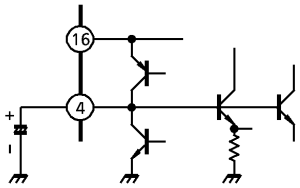	0.75
5	IN_A	Input of power amplifier (This terminal is common with input of adder amplifier.)	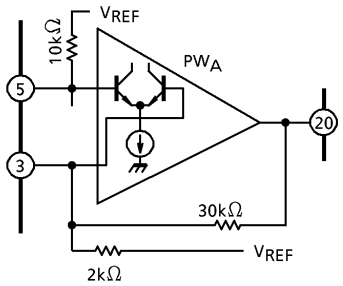	0.75
7	IN_B			
3	NF_A	NF of power amplifier		0.75
8	NF_B			
20	OUT_A	Output of power amplifier		0.6
18	OUT_B			
6	PRE GND	—	—	0
10	MT SW	Muting switch for power amplifier (V_{CC} : Power Amp. on GND / OPEN : Power Amp. off)	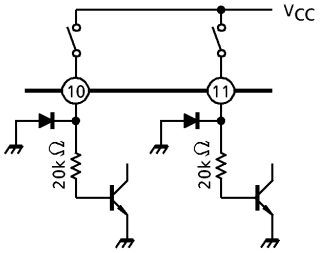	—
11	PW SW	Power switch (V_{CC} : Power on GND / OPEN : Power off)		—

961001EBA2'

- The products described in this document are subject to foreign exchange and foreign trade control laws.
- The information contained herein is presented only as a guide for the applications of our products. No responsibility is assumed by TOSHIBA CORPORATION for any infringements of intellectual property or other rights of the third parties which may result from its use. No license is granted by implication or otherwise under any intellectual property or other rights of TOSHIBA CORPORATION or others.
- The information contained herein is subject to change without notice.

TERMINAL No.	TERMINAL NAME	FUNCTION	INTERNAL CIRCUIT	TERMINAL VOLTAGE (V)
12	RF IN	Ripple filter terminal	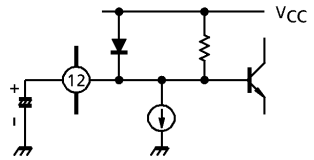	1.2
13	RF OUT	Output of Ripple filter Ripple filter circuit supplies V_{REF} circuit, adder amplifier and boost amplifier with power source.	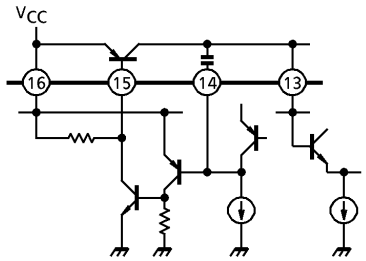	1.13
14	COMP	Phase-compensation terminal for a ripple filter circuit		0.7
15	BASE	Base biasing terminal of transistor for ripple filter		0.5
16	V_{CC}	—	—	1.2
17	PW GND	—	—	0
19	OUT_C	Output of center amplifier	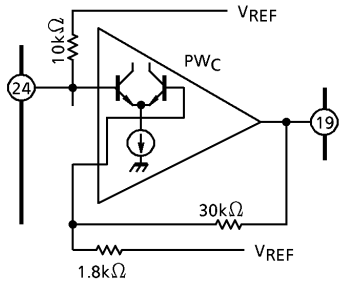	0.6
24	IN_C	Input of center amplifier		0.75
21	ADD OUT	Output of adder amplifier Input of adder amplifier is common with input of power amplifier.	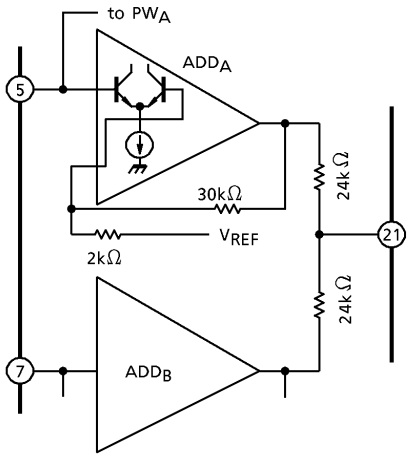	0.6

TERMINAL		FUNCTION	INTERNAL CIRCUIT	TERMINAL VOLTAGE (V)
No.	NAME			
22	BST IN	Input of boost amplifier	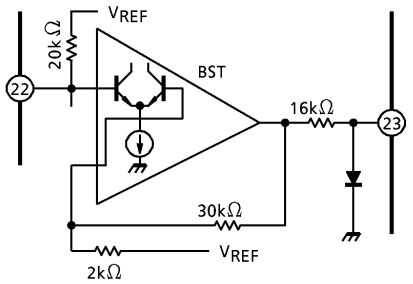	0.75
23	BST OUT	Output of boost amplifier (Controlled by boost switch) (BST ON : BST Amp. on BST OFF : BST Amp. off (Cut off input signal of BST Amp.)		0.6

APPLICATION NOTE

(1) PW SW

It is necessary to connect an external pull-down resistor with terminal PW SW (Pin⑪), in case that this IC is turned on due to external noise etc.

(2) MT SW

The leak current flows through the terminal of MT SW (Pin⑩), in case that this terminal is connected with V_{CC} line independently, even though this IC is off-mode (the terminal of PW SW (Pin⑪) is off-mode). It is necessary to connect an external pull-down resistor with terminal MT SW, in case that this IC is turned on due to external noise etc.

(3) BST SW

The leak current never flows through the terminal of BST SW (Pin①) even though this terminal is at any condition, because the ripple filter circuit supplies the BST SW circuit with power source. The terminal of BST SW should not be applied higher voltage than V_{CC}, to prevent IC from destruction. It is necessary to connect an external pull-up resistor with terminal BST SW, in case that this IC doesn't operate normally due to external noise etc.
In case that boost amplifier is on, BST SW terminal should be appliied V_{CC}~(V_{CC} − 0.3V).

(4) Input of amplifier

Each input signal should be applied through a condenser. In case that DC current or DC voltage is applied to each amplifier, the internal circuit has unbalance and the each amplifier doesn't operate normally.
It is advised that input signal refer to voltage of V_{REF}, in order to reduce a pop sound.

(5) Ripple filter

It is necessary to connect a transistor for ripple filter, because this IC doesn't have transistor for ripple filter. Care should be taken to stabilize the ripple filter circuit, because the ripple filter circuit supplies V_{REF} circuit, adder amplifier and boost amplifier with power source.

MAXIMUM RATINGS (Ta = 25°C)

CHARACTERISTIC		SYMBOL	RATING	UNIT
Supply Voltage		V_{CC}	4.5	V
Output Current		$I_{O\,(Peak)}$	100	mA
Power Dissipation	TA8157AF	P_D (Note)	400	mW
	TA8157AFN		500	
Operating Temperature		T_{opr}	−25~75	°C
Storage Temperature		T_{stg}	−55~150	

(Note) Derated above Ta = 25°C in the proportion of 3.2mW / °C for TA8157AF, and of 4mW / °C for TA8157AFN.

ELECTRICAL CHARACTERISTICS

Unless otherwise specified : V_{CC} = 1.2V, R_L = 16Ω, R_g = 600Ω, f = 1kHz, Ta = 25°C
SW_1 : a, SW_2 : a, SW_3 : b, SW_4 : a, SW_5 : a
SW_6 : a, SW_7 : ON, SW_8 : OPEN

CHARACTERISITC		SYMBOL	TEST CIR-CUIT	TEST CONDITION	MIN.	TYP.	MAX.	UNIT
Quiescent Supply Current		I_{CC1}	1	Power off, SW_1 : b SW_2 : b	—	0.1	5	μA
		I_{CC2}		Power Amp. off, SW_2 : b	—	2.4	4.0	mA
		I_{CC3}		V_{in} = 0	—	8	11.5	
Power amplifier stage	Voltage Gain 1	G_{V1}	2	$V_{o\,(A)} = V_{o\,(B)}$ = −22dBV	22	24	26	dB
	Channel Balance	CB1			—	0	1.5	
	Output Power 1	P_{o1}	2	V_{CC} = 1.5V THD (A) = THD (B) = 10%	5	9	—	mW
	Output Power 2	P_{o2}		V_{CC} = 1.5V THD (A) = THD (B) = 10% $V_{in\,(A)} = V_{in\,(B)} = -V_{in\,(C)}$ f = 100Hz, * BTL operation SW_3 : a, SW_5 : b	8	14	—	
	Total Harmonic Distortion	THD	2	$P_{o\,(A)} = P_{o\,(B)}$ = 1mW	—	0.6	1	%
	Output Noise Voltage	V_{no}	2	BPF = 20Hz~20kHz, SW_4 : b	—	25	40	μV_{rms}
	Cross Talk	CT	2	V_o = −22dBV, SW_4 : b	35	42	—	dB
	Ripple Rejection Ratio	RR1	2	V_{CC} = 1.0V, f_r = 100Hz V_r = −32dBV, SW_7 : OPEN	45	55	—	
	Muting Attenuation	ATT1	2	V_o = −22dBV, SW_2 : a→b	—	73	—	

CHARACTERISTIC		SYMBOL	TEST CIR-CUIT	TEST CONDITION	MIN.	TYP.	MAX.	UNIT
Bass Boost Function Stage	ADD Amp. Voltage Gain	G_{V2}	2	$V_{in\ (A)} = V_{in\ (B)}$, $R_L = 12k\Omega$ $V_{o\ (ADD)} = -22dBV$ SW_3 : a / b	15	17.5	20	dB
	ADD Amp. Maximum Output Voltage	V_{om2}	2	$V_{in\ (A)} = V_{in\ (B)}$, $R_L = 12k\Omega$ THD (ADD) = 1%, SW_3 : a / b	80	130	—	mV_{rms}
	BST Amp. Voltage Gain	G_{V3}	2	$V_o = -37dBV$, $R_L = 16k\Omega$ SW_6 : b	14	16.5	19	dB
	BST Amp. Maximum Output Voltage	V_{om3}	2	THD (BST) = 3%, $R_L = 16k\Omega$ SW_6 : b	55	90	—	mV_{rms}
	BST Amp. Attenuation	ATT3	2	$V_o = -32dBV$, SW_3 : a→b SW_6 : b	—	73	—	dB
Ripple Filter Output Voltage		$V_{RF\ OUT}$	2	$V_{CC} = 1V$, $I_{RF} = 20mA$	0.9	0.93	—	V
Ripple Rejection Ratio		RR4	2	$V_{CC} = 1V$, $I_{RF} = 20mA$ $f_r = 100Hz$, $V_r = -37dBV$ SW_7 : OPEN	35	43	—	dB
Equalizer On Resistance		R_{ON}	1	$I_{EQ} = 100\mu A$, SW_3 : a SW_8 : ON	—	60	—	Ω
Power Switch	On Current	I_{11}	1	$V_{CC} = 0.9V$, $V_4 \geqq 0.5V$ SW_1 : c, SW_2 : b	5	—	—	μA
	Off Voltage	V_{11}	1	$V_{CC} = 0.9V$, $V_4 \leqq 0.2V$ SW_1 : d, SW_2 : b	0	—	0.3	V
Mute Switch	Off Current	I_{10}	1	$V_{CC} = 0.9V$, $I_{CC} \geqq 4.5mA$ SW_2 : c	5	—	—	μA
	On Voltage	V_{10}	1	$V_{CC} = 0.9V$, $I_{CC} \leqq 3.5mA$ SW_2 : d	0	—	0.3	V
Boost Switch	Off Current	I_1	1	$V_{CC} = 0.9V$, $I_{EQ} = 100\mu A$ $V_2 \geqq 0.7V$, SW_3 : c, SW_8 : ON	5	—	—	μA
	On Voltage	V_1	1	$V_{CC} = 0.9V$, $I_{EQ} = 100\mu A$ $V_2 \leqq 0.2V$, SW_3 : d, SW_8 : ON	0.6	—	0.9	V

TEST CIRCUIT 1

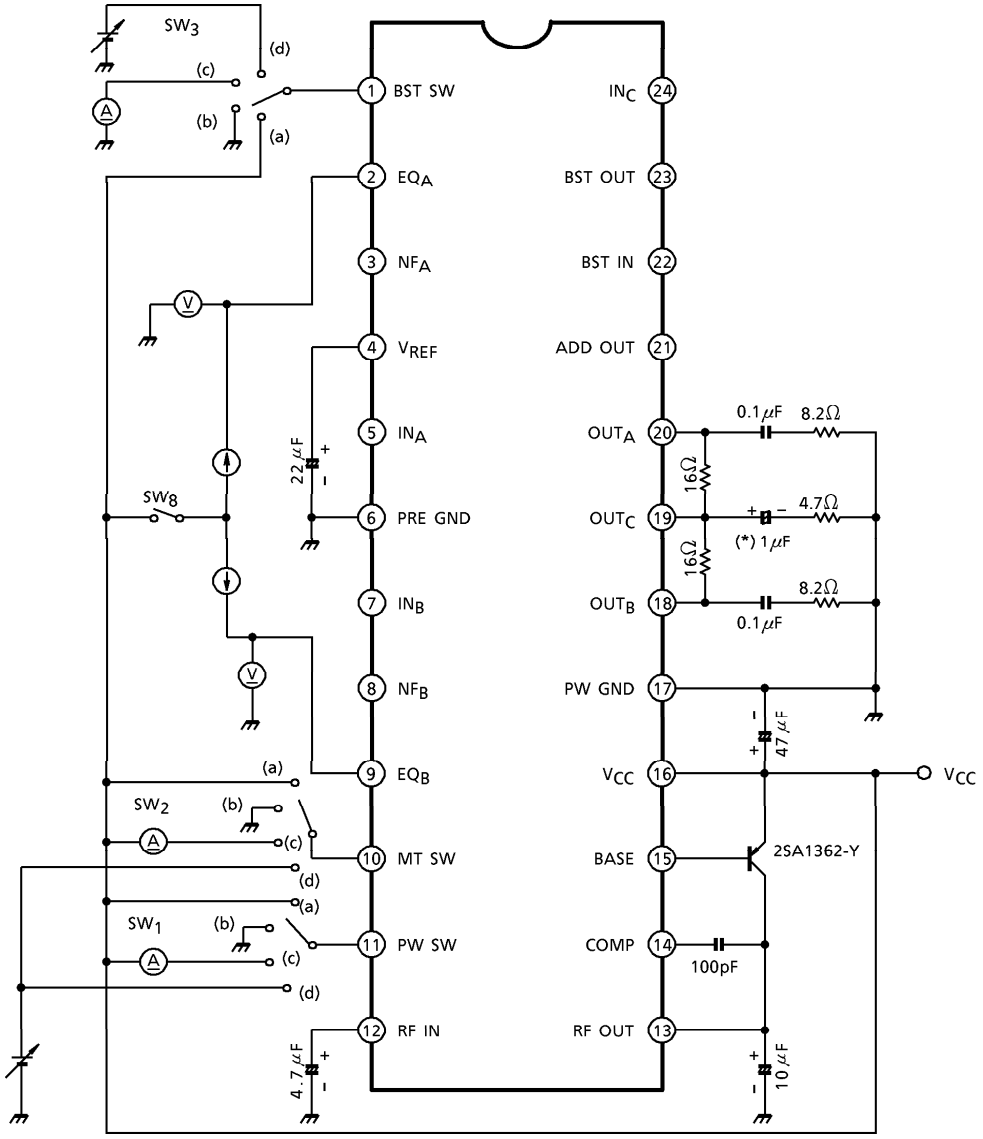

(*) Tantalum condenser

TEST CIRCUIT 2

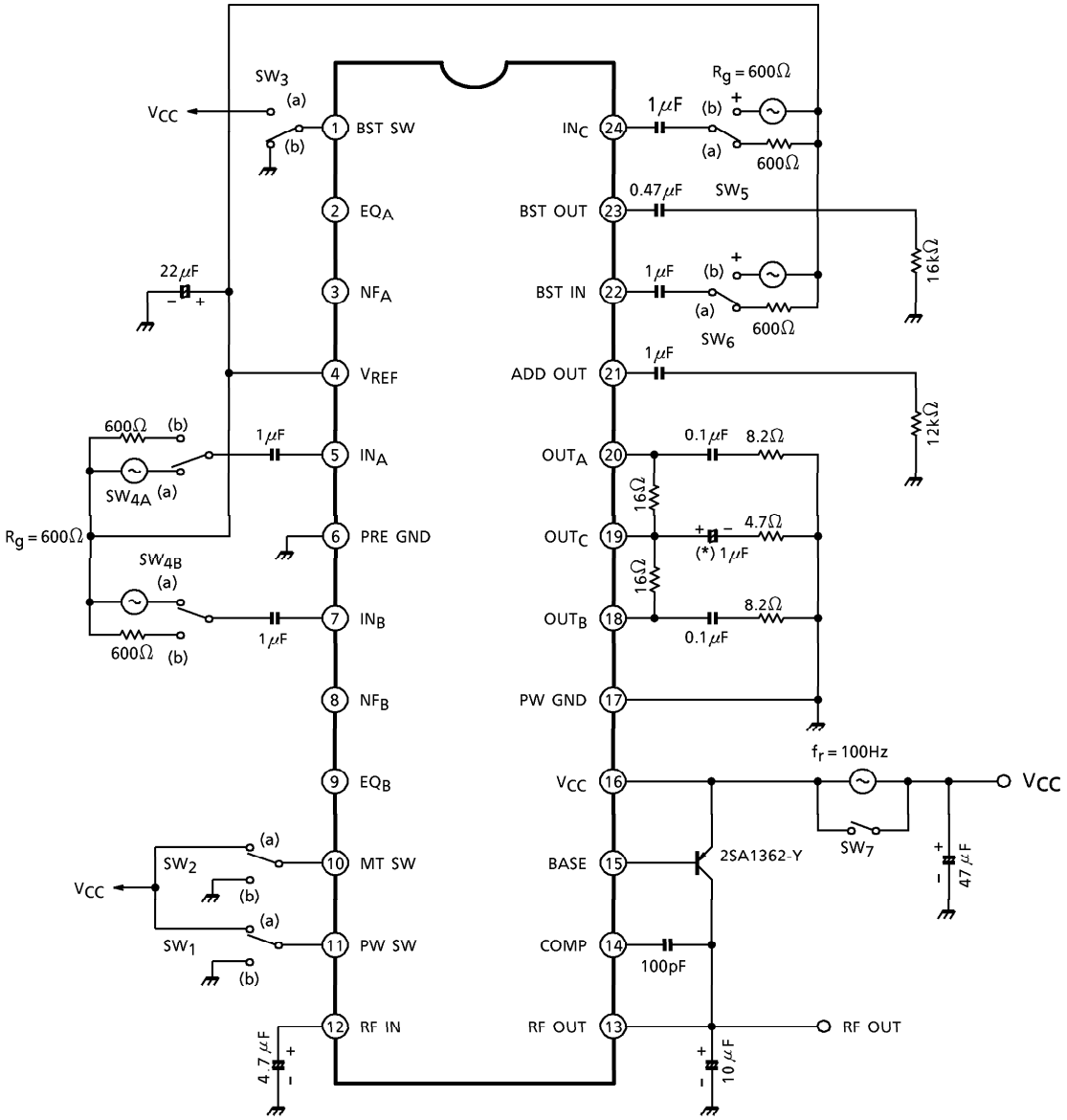

(*) Tantalum condenser

CHARACTERISTIC CURVES

Unless otherwise specified : $V_{CC} = 1.2V$, $R_L = 16\Omega$, $R_g = 600\Omega$, f = 1kHz, Ta = 25°C

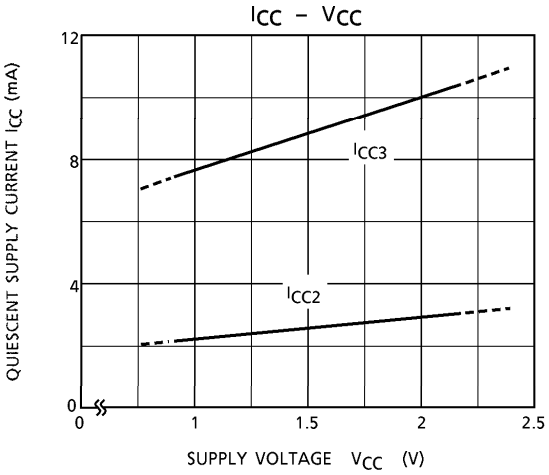

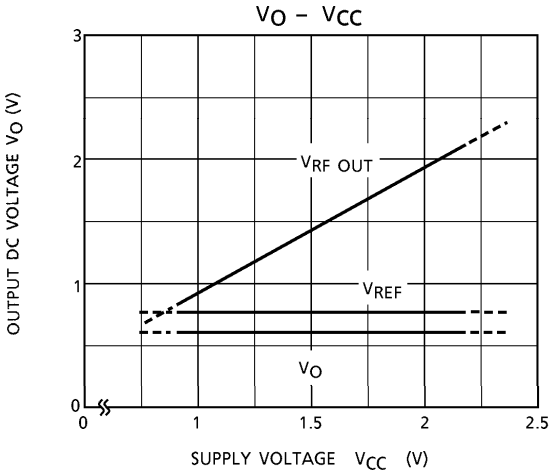

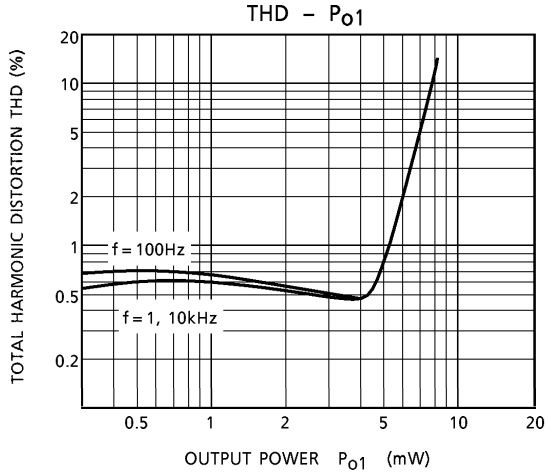

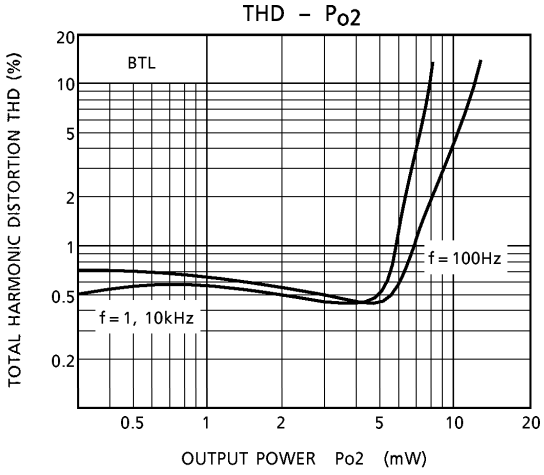

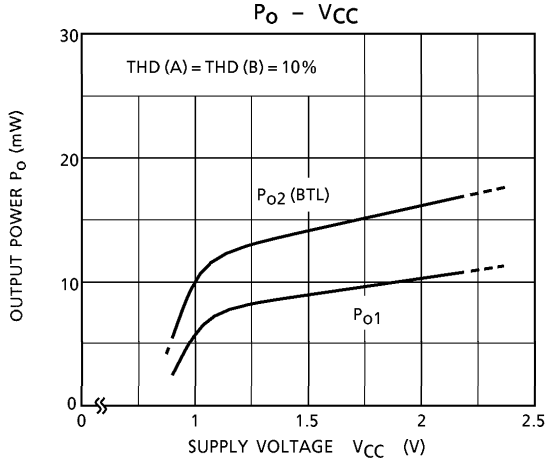

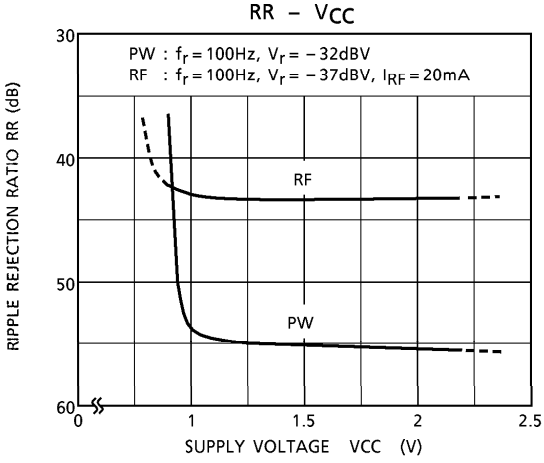

G_V – f

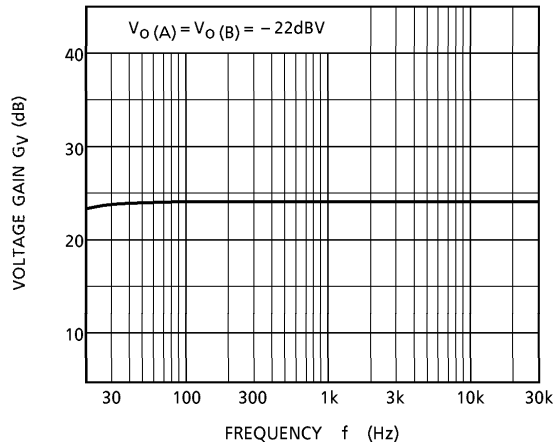

CT – f

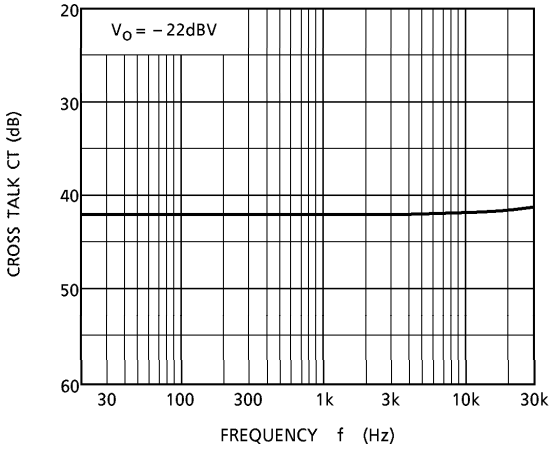

V_{om2} – V_{CC}

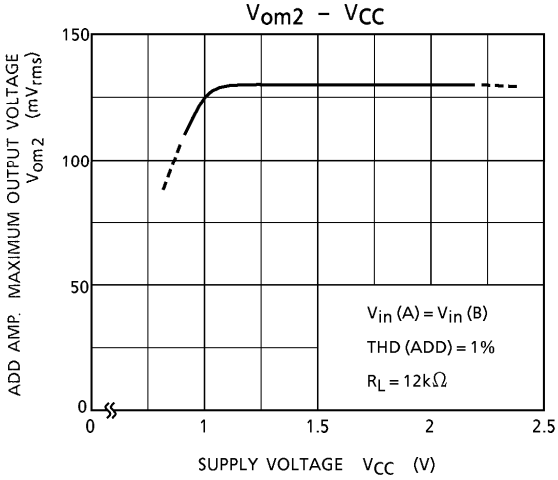

V_{om3} – V_{CC}

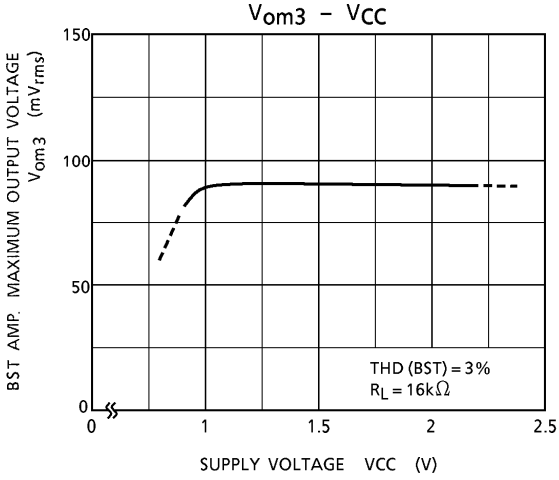

$V_{RF\ OUT}$ – I_{RF}

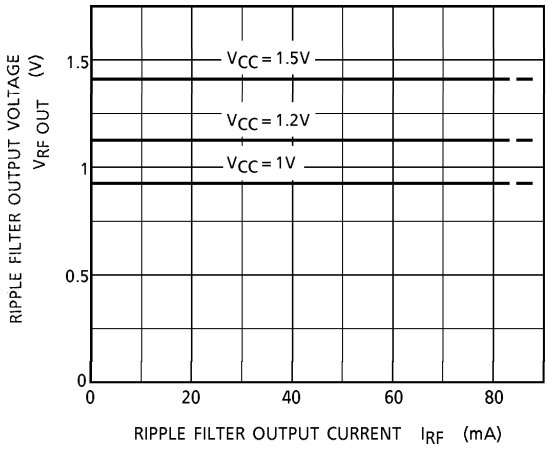

I_{CC} – Ta

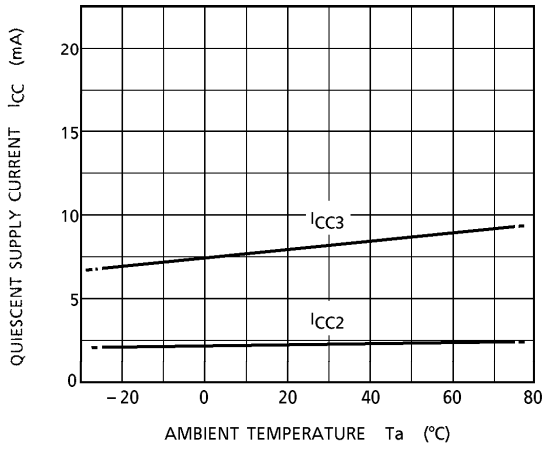

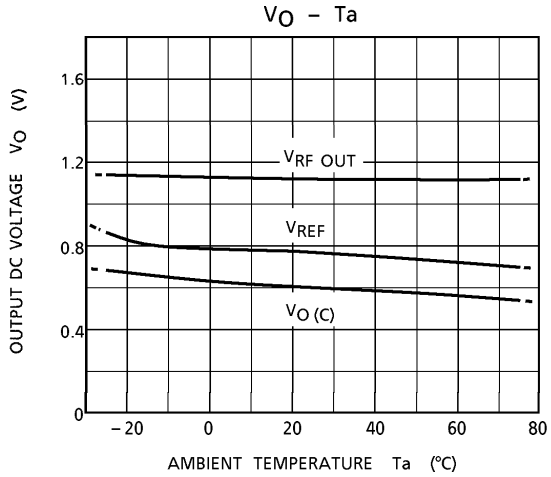
VO – Ta
OUTPUT DC VOLTAGE VO (V)
1.6
1.2
0.8
0.4
0
VRF OUT
VREF
VO (C)
–20
0
20
40
60
80
AMBIENT TEMPERATURE Ta (°C)

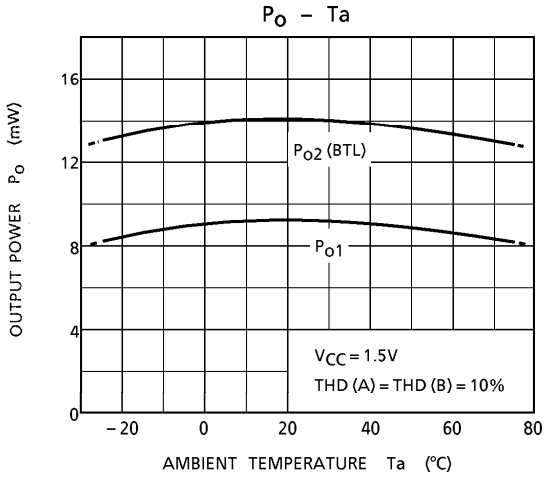
PO – Ta
OUTPUT POWER PO (mW)
16
12
8
4
0
PO2 (BTL)
PO1
VCC = 1.5V
THD (A) = THD (B) = 10%
–20
0
20
40
60
80
AMBIENT TEMPERATURE Ta (°C)

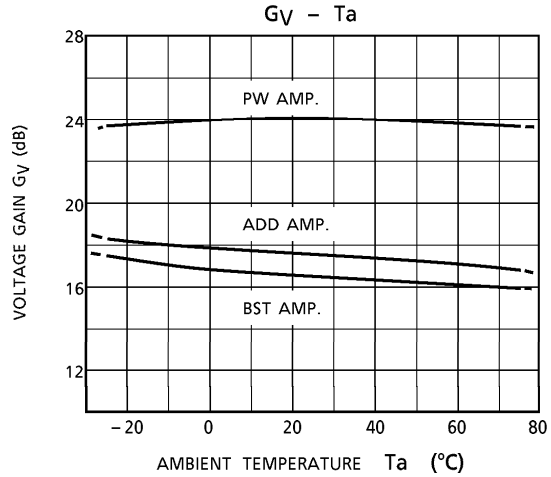
GV – Ta
VOLTAGE GAIN GV (dB)
28
24
20
16
12
PW AMP.
ADD AMP.
BST AMP.
–20
0
20
40
60
80
AMBIENT TEMPERATURE Ta (°C)

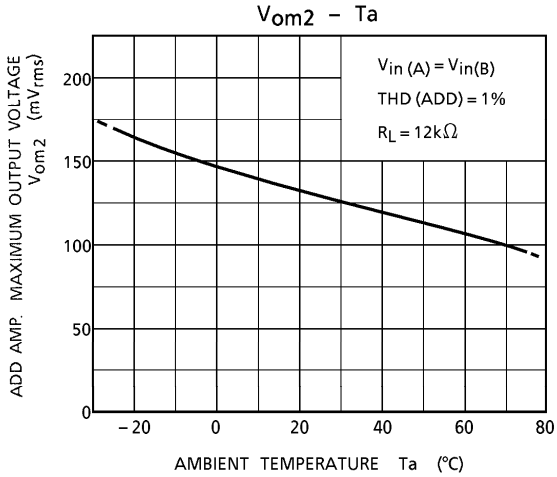
Vom2 – Ta
ADD AMP. MAXIMUM OUTPUT VOLTAGE Vom2 (mVrms)
200
150
100
50
0
Vin (A) = Vin(B)
THD (ADD) = 1%
RL = 12kΩ
–20
0
20
40
60
80
AMBIENT TEMPERATURE Ta (°C)

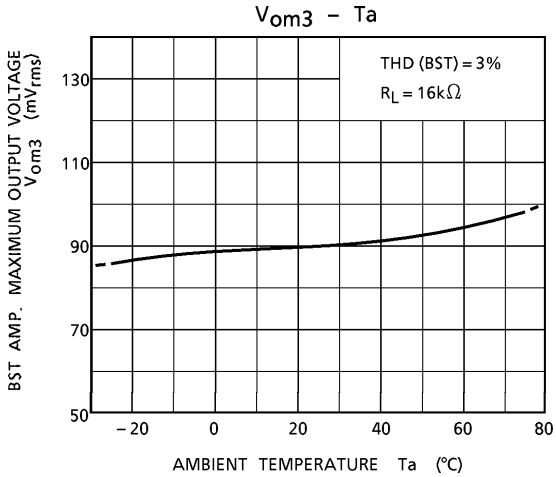
Vom3 – Ta
BST AMP. MAXIMUM OUTPUT VOLTAGE Vom3 (mVrms)
130
110
90
70
50
THD (BST) = 3%
RL = 16kΩ
–20
0
20
40
60
80
AMBIENT TEMPERATURE Ta (°C)

OUTLINE DRAWING
SSOP24-P-300-1.00

Unit : mm

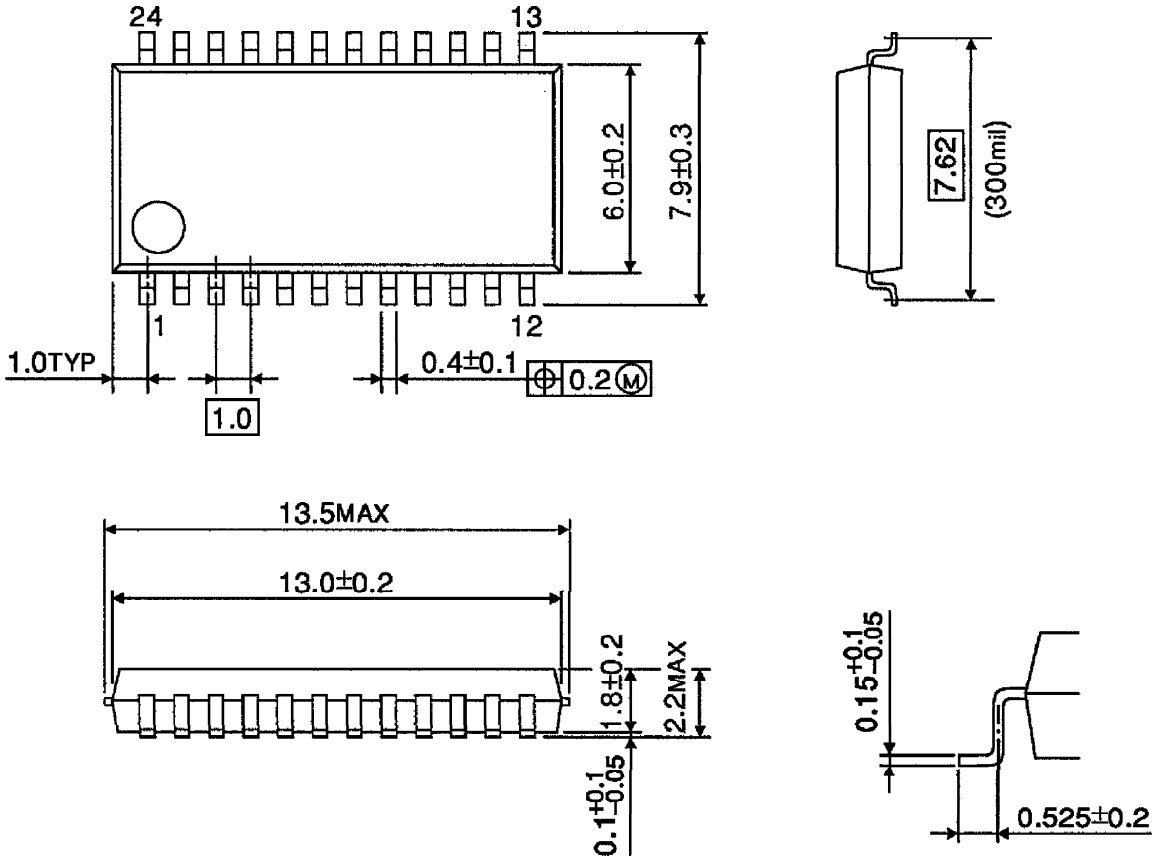

Weight : 0.32g (Typ.)

OUTLINE DRAWING

SSOP24-P-300-0.65A

Unit : mm

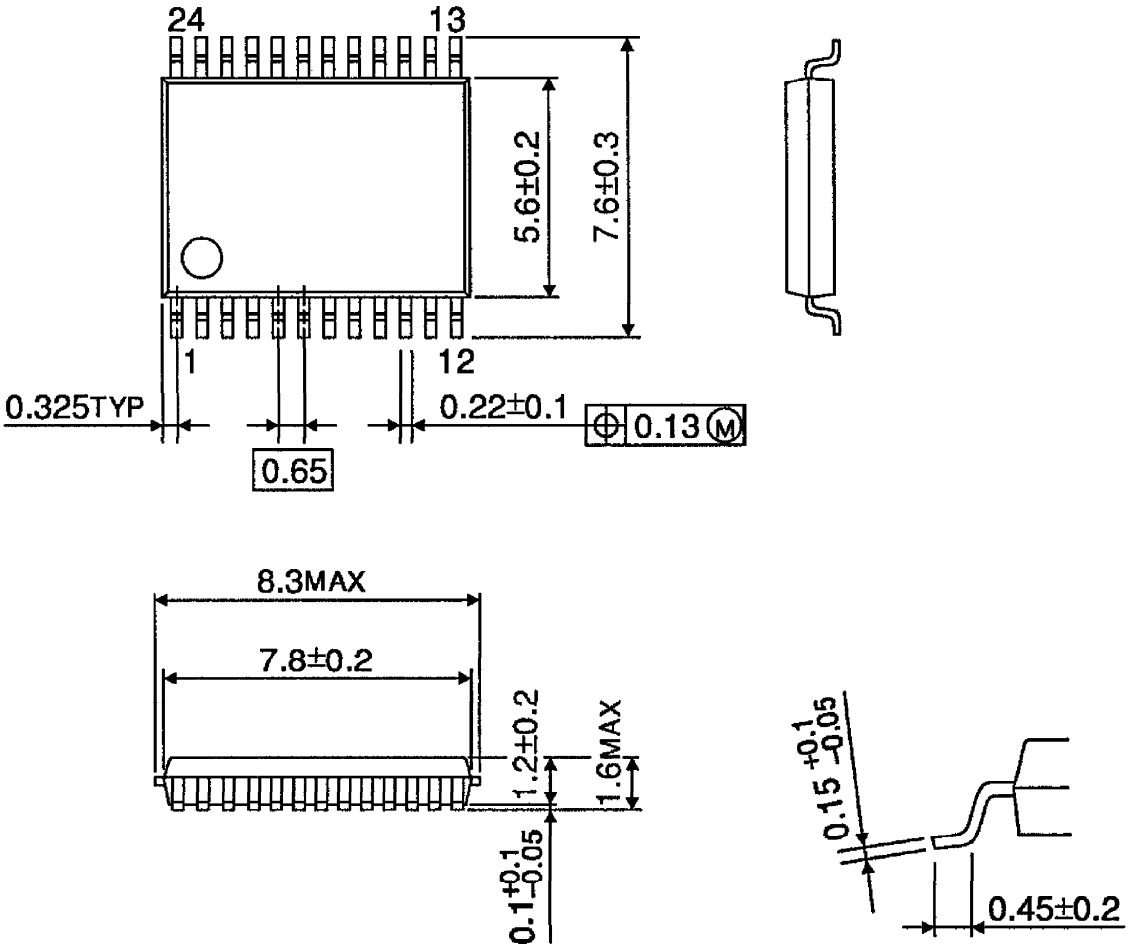

Weight : 0.14g (Typ.)