TOSHIBA CMOS DIGITAL INTEGRATED CIRCUIT SILICON MONOLITHIC

TC74AC377P, TC74AC377F, TC74AC377FW

OCTAL D – TYPE FLIP – FLOP

(Note) The JEDEC SOP (FW) is not available in Japan.

The TC74AC377 is an advanced high speed CMOS OCTAL D-TYPE FLIP FLOP fabricated with silicon gate and double-layer metal wiring C²MOS technology.
It achieves the high speed operation similar to equivalent Bipolar Schottky TTL while maintaining the CMOS low power dissipation.
This 8-bit D-type flip-flop is controlled by a clock input (CK) and an enable input ($\overline{G}$)
The signal level applied to the D inputs are transferred to Q outputs during the positive going transition of CK.
All inputs are equipped with protection circuits against static discharge or transient excess voltage.

FEATURES :

- High Speed ····· f_{MAX} = 140MHz(typ.) at VCC = 5V
- Low Power Dissipation ····· I_{CC} = 8μA(Max.)at Ta = 25°C
- High Noise Immunity ····· $V_{NIH} = V_{NIL}$ = 28% V_{CC}(Min.)
- Symmetrical Output Impedance ··· $|I_{OH}| = I_{OL}$ = 24mA(Min.) Capability of driving 50Ω transmission lines.
- Balanced Propagation Delays ····· $t_{pLH} \simeq t_{pHL}$
- Wide Operating Voltage Range ···· V_{CC} (opr) = 2V ~ 5.5V
- Pin and Function Compatible with 74F377

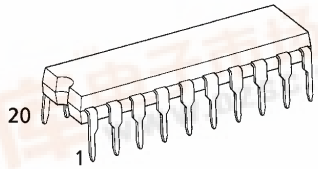

P (DIP20-P-300-2.54A)
Weight : 1.30g (Typ.)

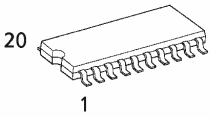

F (SOP20-P-300-1.27)
Weight : 0.22g (Typ.)

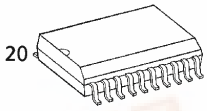

FW (SOL20-P-300-1.27)
Weight : 0.46g (Typ.)

PIN ASSIGNMENT

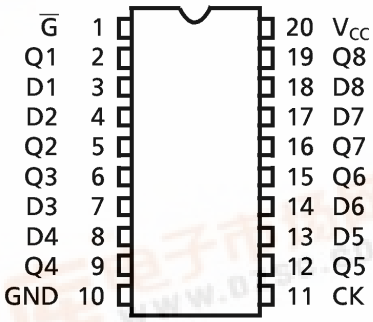

(TOP VIEW)

TRUTH TABLE

INPUTS			OUTPUTS
$\overline{G}$	CK	D	Q
H	X	X	NO CHANGE
L	↑	L	L
L	↑	H	H
X	↓	X	NO CHANGE

X : Don't Care

IEC LOGIC SYMBOL

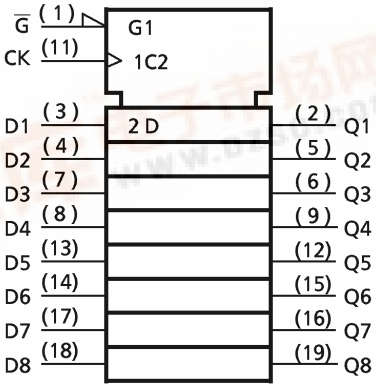

961001EBA2

SYSTEM DIAGRAM

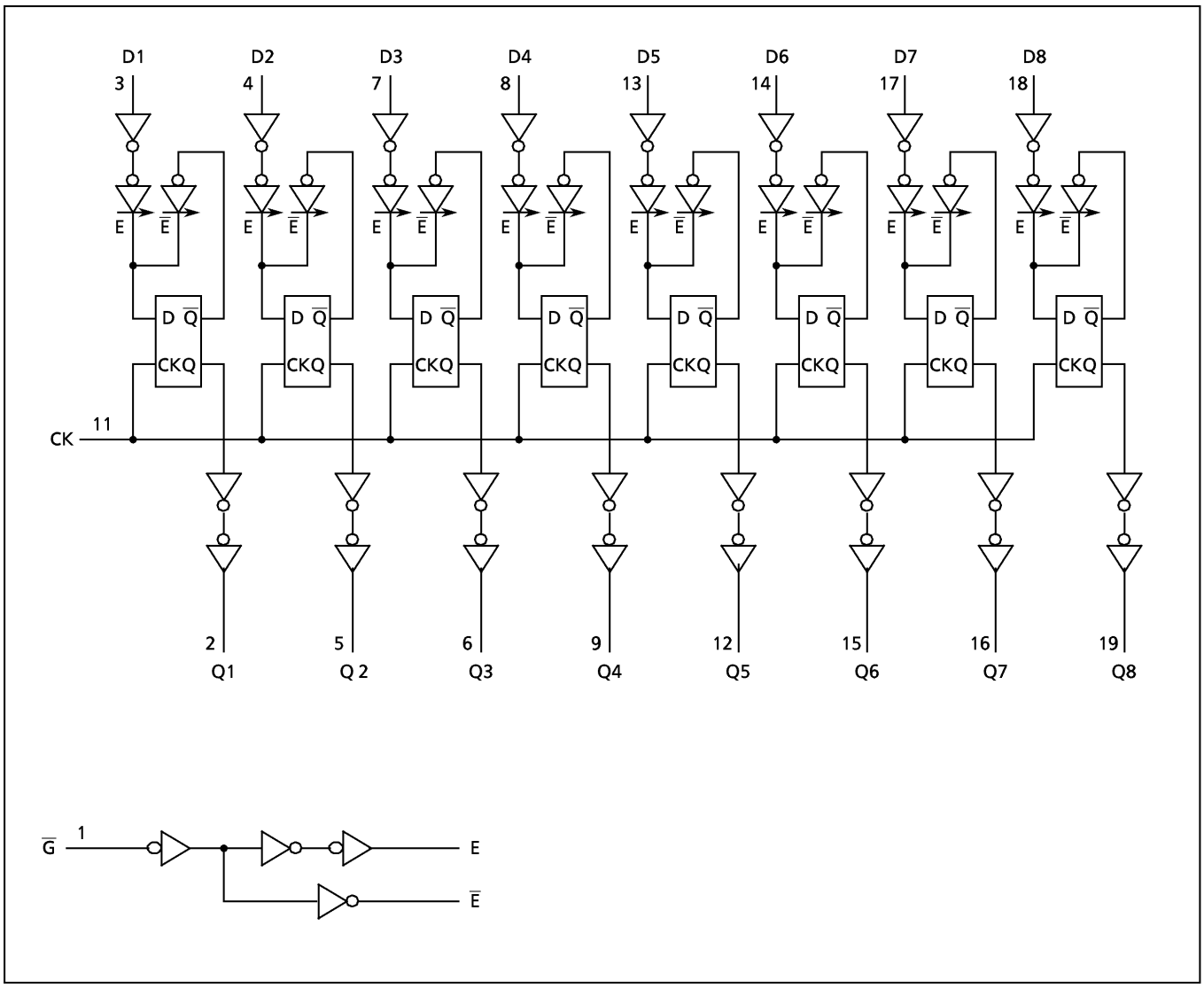

ABSOLUTE MAXIMUM RATINGS

PARAMETER	SYMBOL	VALUE	UNIT
Supply Voltage Range	V_{CC}	−0.5~7.0	V
DC Input Voltage	V_{IN}	−0.5~V_{CC}+0.5	V
DC Output Voltage	V_{OUT}	−0.5~V_{CC}+0.5	V
Input Diode Current	I_{IK}	±20	mA
Output Diode Current	I_{OK}	±50	mA
DC Output Current	I_{OUT}	±50	mA
DC V_{CC}/Ground Current	I_{CC}	±200	mA
Power Dissipation	P_D	500 (DIP)* / 180 (SOP)	mW
Storage Temperature	T_{stg}	−65~150	°C

*500mW in the range of Ta = −40°C~65°C. From Ta = 65°C to 85°C a derating factor of −10mW/°C should be applied up to 300mW.

RECOMMENDED OPERATING CONDITIONS

PARAMETER	SYMBOL	VALUE	UNIT
Supply Voltage	V_{CC}	2.0~5.5	V
Input Voltage	V_{IN}	0~V_{CC}	V
Output Voltage	V_{OUT}	0~V_{CC}	V
Operating Temperature	T_{opr}	−40~85	°C
Input Rise and Fall Time	dt / dV	0~ 100 (Vcc = 3.3 ± 0.3V) 0~ 20 (Vcc = 5 ± 0.5V)	ns / V

DC ELECTRICAL CHARACTERISTICS

PARAMETER	SYMBOL	TEST CONDITION		V_{CC} (V)	Ta = 25°C MIN.	Ta = 25°C TYP.	Ta = 25°C MAX.	Ta = −40~85°C MIN.	Ta = −40~85°C MAX.	UNIT
High - Level Input Voltage	V_{IH}			2.0 3.0 5.5	1.50 2.10 3.85	— — —	— — —	1.50 2.10 3.85	— — —	V
Low - Level Input Voltage	V_{IL}			2.0 3.0 5.5	— — —	— — —	0.50 0.90 1.65	— — —	0.50 0.90 1.65	V
High - Level Output Voltage	V_{OH}	V_{IN} = V_{IH} or V_{IL}	I_{OH} = −50μA	2.0 3.0 4.5	1.9 2.9 4.4	2.0 3.0 4.5	— — —	1.9 2.9 4.4	— — —	V
			I_{OH} = −4mA I_{OH} = −24mA I_{OH} = −75mA*	3.0 4.5 5.5	2.58 3.94 —	— — —	— — —	2.48 3.80 3.85	— — —	
Low - Level Output Voltage	V_{OL}	V_{IN} = V_{IH} or V_{IL}	I_{OL} = 50μA	2.0 3.0 4.5	— — —	0.0 0.0 0.0	0.1 0.1 0.1	— — —	0.1 0.1 0.1	V
			I_{OL} = 12mA I_{OL} = 24mA I_{OL} = 75mA*	3.0 4.5 5.5	— — —	— — —	0.36 0.36 —	— — —	0.44 0.44 1.65	
Input Leakage Current	I_{IN}	V_{IN} = V_{CC} or GND		5.5	—	—	±0.1	—	±1.0	μA
Quiescent Supply Current	I_{CC}	V_{IN} = V_{CC} or GND		5.5	—	—	8.0	—	80.0	

* : This spec indicates the capability of driving 50Ω transmission lines.
One output should be tested at a time for a 10ms maximum duration.

TIMING REQUIREMENTS (Input $t_r = t_f = 3ns$)

PARAMETER	SYMBOL	TEST CONDITION		Ta = 25°C	Ta = −40~85°C	UNIT
			V_{CC} (V)	LIMIT	LIMIT	
Minimum Pulse Width (CK)	$t_{W(L)}$ $t_{W(H)}$		3.3 ± 0.3 5.0 ± 0.5	8.0 5.0	8.0 5.0	ns
Minimum Set-up Time (D−CK)	t_s		3.3 ± 0.3 5.0 ± 0.5	8.0 4.0	8.0 4.0	
Minimum Set-up Time ($\overline{G}$−CK)	t_s		3.3 ± 0.3 5.0 ± 0.5	9.0 4.0	9.0 4.0	
Minimum Hold Time	t_h		3.3 ± 0.3 5.0 ± 0.5	1.0 1.0	1.0 1.0	

AC ELECTRICAL CHARACTERISTICS ($C_L = 50pF$, $R_L = 500\Omega$, Input $t_r = t_f = 3ns$)

PARAMETER	SYMBOL	TEST CONDITION		Ta = 25°C			Ta = −40~85°C		UNIT
			V_{CC} (V)	MIN.	TYP.	MAX.	MIN.	MAX.	
Propagation Delay Time (CK−Q)	t_{pLH} t_{pHL}		3.3 ± 0.3 5.0 ± 0.5	− −	10.6 7.4	17.6 10.6	1.0 1.0	20.0 12.0	ns
Maximum Clock Frequency	f_{MAX}		3.3 ± 0.3 5.0 ± 0.5	50 80	95 140	− −	50 80	− −	MHz
Input Capacitance	C_{IN}			−	5	10	−	10	pF
Power Dissipation Capacitance	C_{PD} (1)			−	30	−	−	−	

Note (1) C_{PD} is defined as the value of the internal equivalent capacitance which is calculated from the operating current consumption without load.
Average operating current can be obtained by the equation:

$$I_{CC}(opr.) = C_{PD} \cdot V_{CC} \cdot f_{IN} + I_{CC} / 8 \text{ (per F / F)}$$

And the total C_{PD} when n pcs. of Flip Flop operate can be gained by the following equation:

$$C_{PD(total)} = 20 + 10 \cdot n$$

DIP 20PIN OUTLINE DRAWING (DIP20-P-300-2.54A) Unit in mm

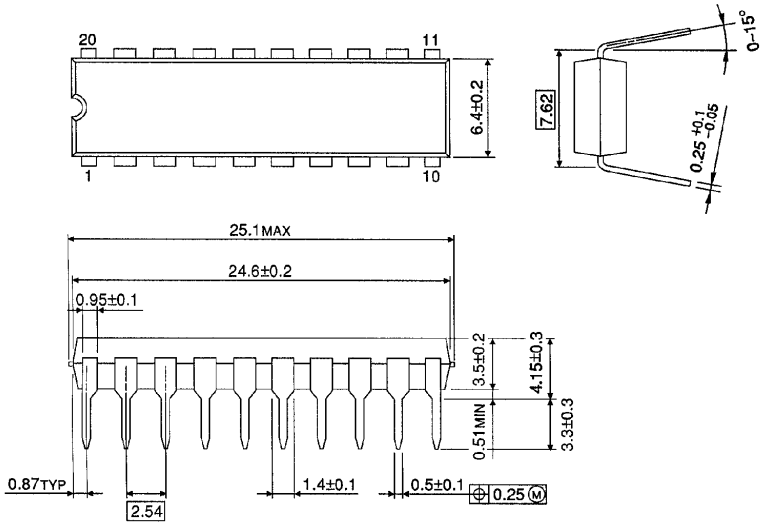

Weight : 1.30g (Typ.)

SOP 20PIN (200mil BODY) OUTLINE DRAWING (SOP20-P-300-1.27) Unit in mm

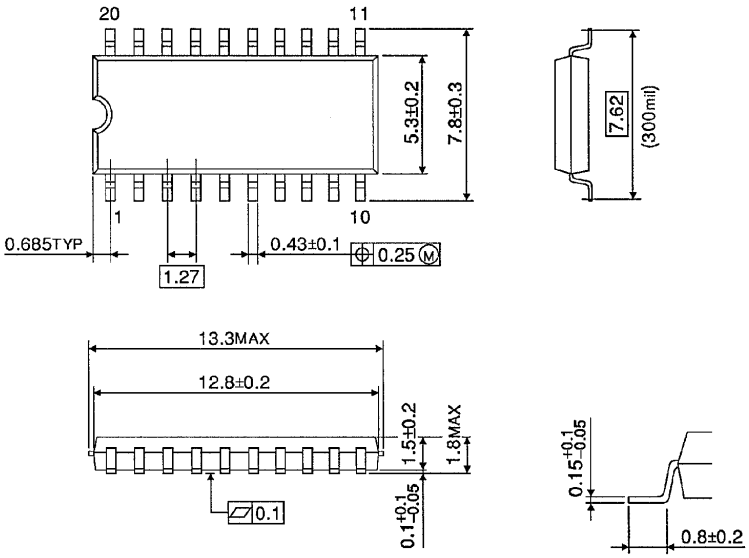

Weight : 0.22g (Typ.)

SOP 20PIN (300mil BODY) OUTLINE DRAWING (SOL20-P-300-1.27) Unit in mm

(Note) This package is not available in Japan.

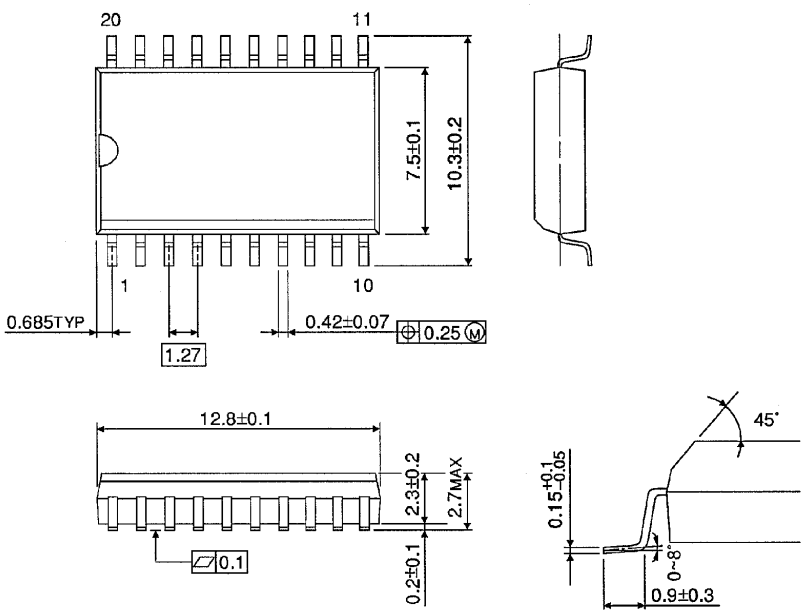

Weight : 0.46g (Typ.)