TOSHIBA CMOS DIGITAL INTEGRATED CIRCUIT SILICON MONOLITHIC

TC74HC30AP, TC74HC30AF, TC74HC30AFN

8 – INPUT NAND GATE

(Note) The JEDEC SOP (FN) is not available in Japan.

The TC74HC30A is a high speed CMOS 8-INPUT NAND GATE fabricated with silicon gate C²MOS technology.
It achieves the high speed operation similar to equivalent LSTTL while maintaining the CMOS low power dissipation.
The internal circuit is composed of 5 stages including buffer output, which provide high noise immunity and stable output.
All inputs are equipped with protection circuits against static discharge or transient excess voltage.

FEATURES :

- High Speed ····· t_{pd} = 12ns(typ.) at V_{CC} = 5V
- Low Power Dissipation ····· I_{CC} = 1 μA(Max.) at Ta = 25°C
- High Noise Immunity ····· $V_{NIH} = V_{NIL}$ = 28% V_{CC} (Min.)
- Output Drive Capability ····· 10 LSTTL Loads
- Symmetrical Output Impedance ··· $|I_{OH}| = I_{OL}$ = 4mA(Min.)
- Balanced Propagation Delays ····· $t_{pLH} \simeq t_{pHL}$
- Wide Operating Voltage Range ···· V_{CC} (opr.) = 2V ~ 6V
- Pin and Function Compatible with 74LS30

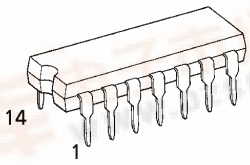

P (DIP14-P-300-2.54)
Weight : 0.96g (Typ.)

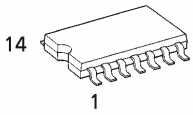

F (SOP14-P-300-1.27)
Weight : 0.18g (Typ.)

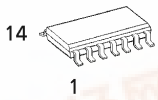

FN (SOL14-P-150-1.27)
Weight : 0.12g (Typ.)

PIN ASSIGNMENT

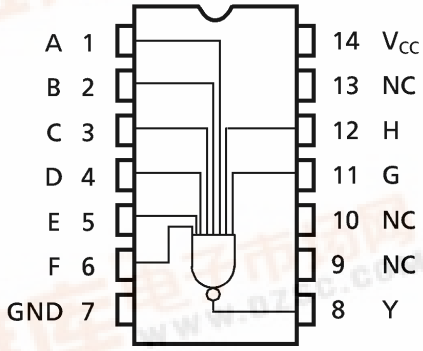

(TOP VIEW)
NC : No Connection

IEC LOGIC SYMBOL

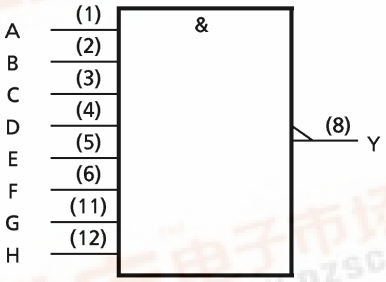

TRUTH TABLE

Inputs	Inputs
All Inputs	L
All Other Combinations	H

980508EBA2

ABSOLUTE MAXIMUM RATINGS

PARAMETER	SYMBOL	VALUE	UNIT
Supply Voltage Range	V_{CC}	−0.5~7	V
DC Input Voltage	V_{IN}	−0.5~V_{CC}+0.5	V
DC Output Voltage	V_{OUT}	−0.5~V_{CC}+0.5	V
Input Diode Current	I_{IK}	±20	mA
Output Diode Current	I_{OK}	±20	mA
DC Output Current	I_{OUT}	±25	mA
DC V_{CC} / Ground Current	I_{CC}	±50	mA
Power Dissipation	P_D	500 (DIP)* / 180 (SOP)	mW
Storage Temperature	T_{stg}	−65~150	°C

*500mW in the range of Ta=−40°C~65°C. From Ta=65°C to 85 °C a derating factor of −10mW/°C shall be applied until 300mW.

RECOMMENDED OPERATING CONDITIONS

PARAMETER	SYMBOL	VALUE	UNIT
Supply Voltage	V_{CC}	2~6	V
Input Voltage	V_{IN}	0~V_{CC}	V
Output Voltage	V_{OUT}	0~V_{CC}	V
Operating Temperature	T_{opr}	−40~85	°C
Input Rise and Fall Time	t_r, t_f	0~1000 (V_{CC}=2.0V) 0~ 500 (V_{CC}=4.5V) 0~ 400 (V_{CC}=6.0V)	ns

DC ELECTRICAL CHARACTERISTICS

PARAMETER	SYMBOL	TEST CONDITION		V_{CC} (V)	Ta=25°C MIN.	Ta=25°C TYP.	Ta=25°C MAX.	Ta=−40~85°C MIN.	Ta=−40~85°C MAX.	UNIT
High - Level Input Voltage	V_{IH}			2.0 4.5 6.0	1.50 3.15 4.20	— — —	— — —	1.50 3.15 4.20	— — —	V
Low - Level Input Voltage	V_{IL}			2.0 4.5 6.0	— — —	— — —	0.50 1.35 1.80	— — —	0.50 1.35 1.80	V
High - Level Output Voltage	V_{OH}	V_{IN}= V_{IH} or V_{IL}	I_{OH}=−20μA	2.0 4.5 6.0	1.9 4.4 5.9	2.0 4.5 6.0	— — —	1.9 4.4 5.9	— — —	V
			I_{OH}=−4 mA I_{OH}=−5.2mA	4.5 6.0	4.18 5.68	4.31 5.80	— —	4.13 5.63	— —	
Low - Level Output Voltage	V_{OL}	V_{IN}=V_{IH}	I_{OL}=20μA	2.0 4.5 6.0	— — —	0.0 0.0 0.0	0.1 0.1 0.1	— — —	0.1 0.1 0.1	V
			I_{OL}=4 mA I_{OL}=5.2mA	4.5 6.0	— —	0.17 0.18	0.26 0.26	— —	0.33 0.33	
Input Leakage Current	I_{IN}	V_{IN}=V_{CC} or GND		6.0	—	—	±0.1	—	±1.0	μA
Quiescent Supply Current	I_{CC}	V_{IN}=V_{CC} or GND		6.0	—	—	1.0	—	10.0	

980508EBA2'

AC ELECTRICAL CHARACTERISTICS (C_L = 15pF, V_{CC} = 5V, Ta = 25°C, Input $t_r = t_f$ = 6ns)

PARAMETER	SYMBOL	TEST CONDITION	MIN.	TYP.	MAX.	UNIT
Output Transition Time	t_{TLH} t_{THL}		—	4	8	ns
Propagation Delay Time	t_{pLH} t_{pHL}		—	12	19	

AC ELECTRICAL CHARACTERISTICS (C_L = 50pF, Input $t_r = t_f$ = 6ns)

PARAMETER	SYMBOL	TEST CONDITION		Ta = 25°C			Ta = −40~85°C		UNIT
			V_{CC} (V)	MIN.	TYP.	MAX.	MIN.	MAX.	
Output Transition Time	t_{TLH} t_{THL}		2.0 4.5 6.0	— — —	30 8 7	75 15 13	— — —	95 19 16	ns
Propagation Delay Time	t_{pLH} t_{pHL}		2.0 4.5 6.0	— — —	45 15 13	115 23 20	— — —	145 29 25	
Input Capacitance	C_{IN}			—	5	10	—	10	pF
Power Dissipation Capacitance	C_{PD} (1)			—	20	—	—	—	

Note (1) C_{PD} is defined as the value of the internal equivalent capacitance which is calculated from the operating current consumption without load.
Average operating current can be obtained by the equation :

$$I_{CC}(opr) = C_{PD} \cdot V_{CC} \cdot f_{IN} + I_{CC}$$

DIP 14PIN OUTLINE DRAWING (DIP14-P-300-2.54) Unit in mm

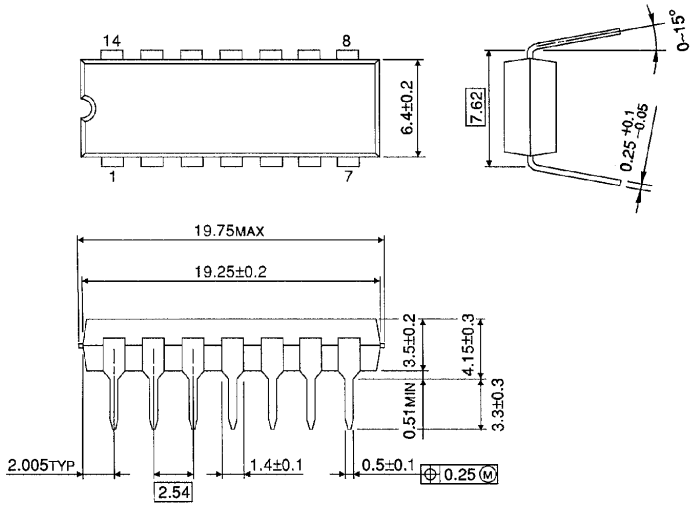

Weight : 0.96g (Typ.)

SOP 14PIN (200mil BODY) OUTLINE DRAWING (SOP14-P-300-1.27) Unit in mm

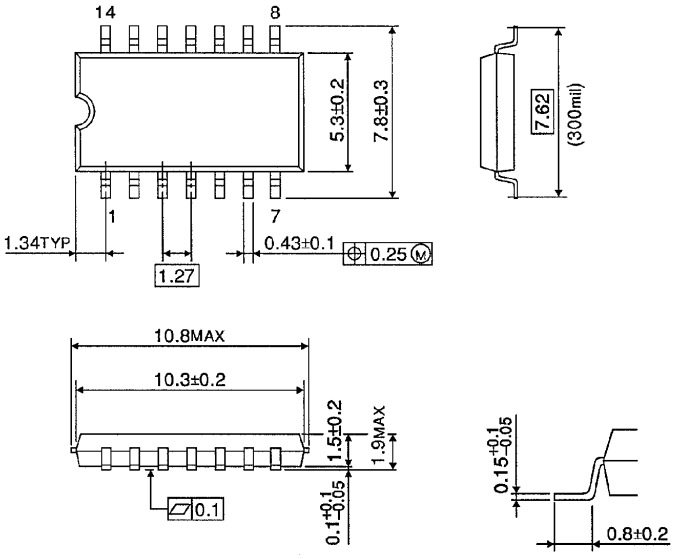

Weight : 0.18g (Typ.)

SOP 14PIN (150mil BODY) OUTLINE DRAWING (SOL14-P-150 -1.27) Unit in mm

(Note) This package is not available in Japan.

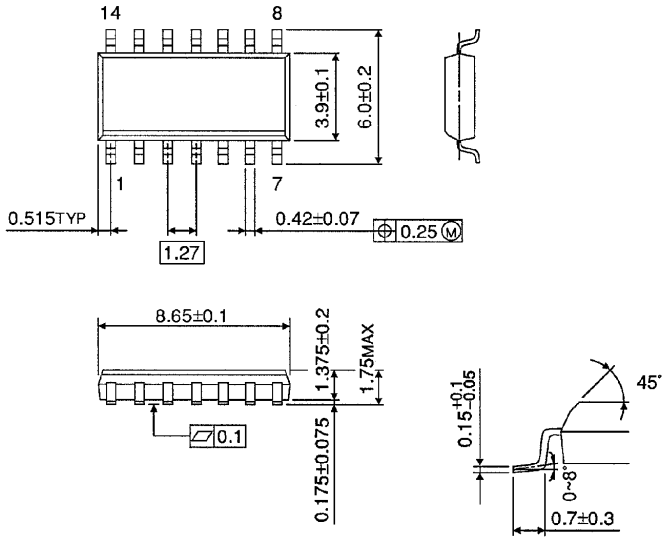

Weight : 0.12g (Typ.)