查询IRFP140N供应商 捷多邦，专业PCB打样工厂，24小时加急出货

Data Sheet March 2000 File Number 4841

33A, 100V, 0.040 Ohm, N-Channel Power MOSFET

Packaging

JEDEC TO-247

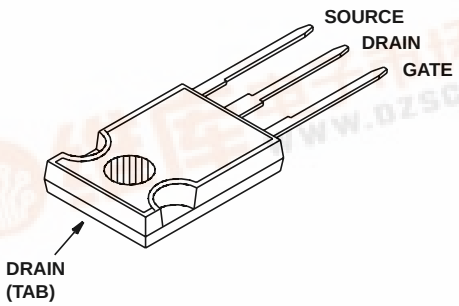

Features

- Ultra Low On-Resistance
  - $r_{DS(ON)}$ = 0.040Ω, V_{GS} = 10V
- Simulation Models
  - Temperature Compensated PSPICE™ and SABER© Electrical Models
  - Spice and SABER© Thermal Impedance Models
  - www.intersil.com
- Peak Current vs Pulse Width Curve
- UIS Rating Curve

Symbol

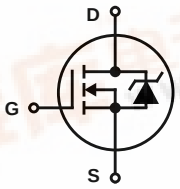

Ordering Information

PART NUMBER	PACKAGE	BRAND
IRFP140N	TO-247	IRFP140N

Absolute Maximum Ratings T_C = 25°C, Unless Otherwise Specified

		IRFP140N	UNITS
Drain to Source Voltage (Note 1)	V_{DSS}	100	V
Drain to Gate Voltage (R_{GS} = 20kΩ) (Note 1)	V_{DGR}	100	V
Gate to Source Voltage	V_{GS}	±20	V
Drain Current			
Continuous (T_C= 25°C, V_{GS} = 10V) (Figure 2)	I_D	33	A
Continuous (T_C= 100°C, V_{GS} = 10V) (Figure 2)	I_D	23	A
Pulsed Drain Current	I_{DM}	Figure 4	
Pulsed Avalanche Rating	UIS	Figures 6, 14, 15	
Power Dissipation	P_D	120	W
Derate Above 25°C		0.80	W/°C
Operating and Storage Temperature	T_J, T_{STG}	-55 to 175	°C
Maximum Temperature for Soldering			
Leads at 0.063in (1.6mm) from Case for 10s	T_L	300	°C
Package Body for 10s, See Techbrief TB334	T_{pkg}	260	°C

NOTES:

1. T_J = 25°C to 150°C.

CAUTION: *Stresses above those listed in "Absolute Maximum Ratings" may cause permanent damage to the device. This is a stress only rating and operation of the device at these or any other conditions above those indicated in the operational sections of this specification is not implied.*

找PDF 维库一下 pdf.dzsc.com

CAUTION: These devices are sensitive to electrostatic discharge. Follow proper ESD Handling Procedures.

Electrical Specifications $T_C = 25^oC$, Unless Otherwise Specified

PARAMETER	SYMBOL	TEST CONDITIONS		MIN	TYP	MAX	UNITS
OFF STATE SPECIFICATIONS							
Drain to Source Breakdown Voltage	BV_{DSS}	I_D = 250μA, V_{GS} = 0V (Figure 11)		100	-	-	V
Zero Gate Voltage Drain Current	I_{DSS}	V_{DS} = 95V, V_{GS} = 0V		-	-	1	μA
		V_{DS} = 90V, V_{GS} = 0V, $T_C = 150^oC$		-	-	250	μA
Gate to Source Leakage Current	I_{GSS}	V_{GS} = ±20V		-	-	±100	nA
ON STATE SPECIFICATIONS							
Gate to Source Threshold Voltage	$V_{GS(TH)}$	V_{GS} = V_{DS}, I_D = 250μA (Figure 10)		2	-	4	V
Drain to Source On Resistance	$r_{DS(ON)}$	I_D = 33A, V_{GS} = 10V (Figure 9)		-	0.033	0.040	Ω
THERMAL SPECIFICATIONS							
Thermal Resistance Junction to Case	$R_{\theta JC}$	TO-247		-	-	1.25	$^oC/W$
Thermal Resistance Junction to Ambient	$R_{\theta JA}$			-	-	30	$^oC/W$
SWITCHING SPECIFICATIONS (V_{GS} = 10V)							
Turn-On Time	t_{ON}	V_{DD} = 50V, I_D = 33A V_{GS} = 10V, R_{GS} = 9.1Ω (Figures 18, 19)		-	-	100	ns
Turn-On Delay Time	$t_{d(ON)}$			-	9.5	-	ns
Rise Time	t_r			-	57	-	ns
Turn-Off Delay Time	$t_{d(OFF)}$			-	40	-	ns
Fall Time	t_f			-	55	-	ns
Turn-Off Time	t_{OFF}			-	-	145	ns
GATE CHARGE SPECIFICATIONS							
Total Gate Charge	$Q_{g(TOT)}$	V_{GS} = 0V to 20V	V_{DD} = 50V, I_D = 33A, $I_{g(REF)}$ = 1.0mA (Figures 13, 16, 17)	-	66	79	nC
Gate Charge at 10V	$Q_{g(10)}$	V_{GS} = 0V to 10V		-	35	42	nC
Threshold Gate Charge	$Q_{g(TH)}$	V_{GS} = 0V to 2V		-	2.4	2.9	nC
Gate to Source Gate Charge	Q_{gs}			-	5.4	-	nC
Gate to Drain "Miller" Charge	Q_{gd}			-	13	-	nC
CAPACITANCE SPECIFICATIONS							
Input Capacitance	C_{ISS}	V_{DS} = 25V, V_{GS} = 0V, f = 1MHz (Figure 12)		-	1220	-	pF
Output Capacitance	C_{OSS}			-	295	-	pF
Reverse Transfer Capacitance	C_{RSS}			-	100	-	pF

Source to Drain Diode Specifications

PARAMETER	SYMBOL	TEST CONDITIONS	MIN	TYP	MAX	UNITS
Source to Drain Diode Voltage	V_{SD}	I_{SD} = 33A	-	-	1.25	V
		I_{SD} = 17A	-	-	1.00	V
Reverse Recovery Time	t_{rr}	I_{SD} = 33A, dI_{SD}/dt = 100A/μs	-	-	112	ns
Reverse Recovered Charge	Q_{RR}	I_{SD} = 33A, dI_{SD}/dt = 100A/μs	-	-	400	nC

Typical Performance Curves

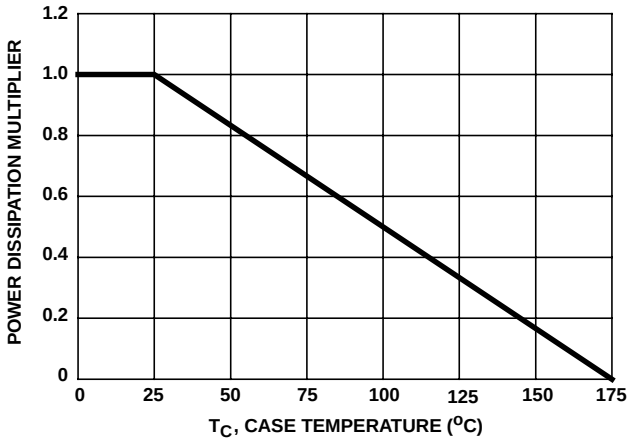

FIGURE 1. NORMALIZED POWER DISSIPATION vs CASE TEMPERATURE

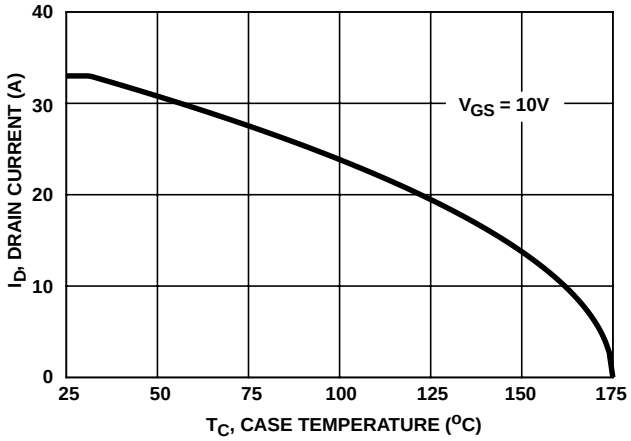

FIGURE 2. MAXIMUM CONTINUOUS DRAIN CURRENT vs CASE TEMPERATURE

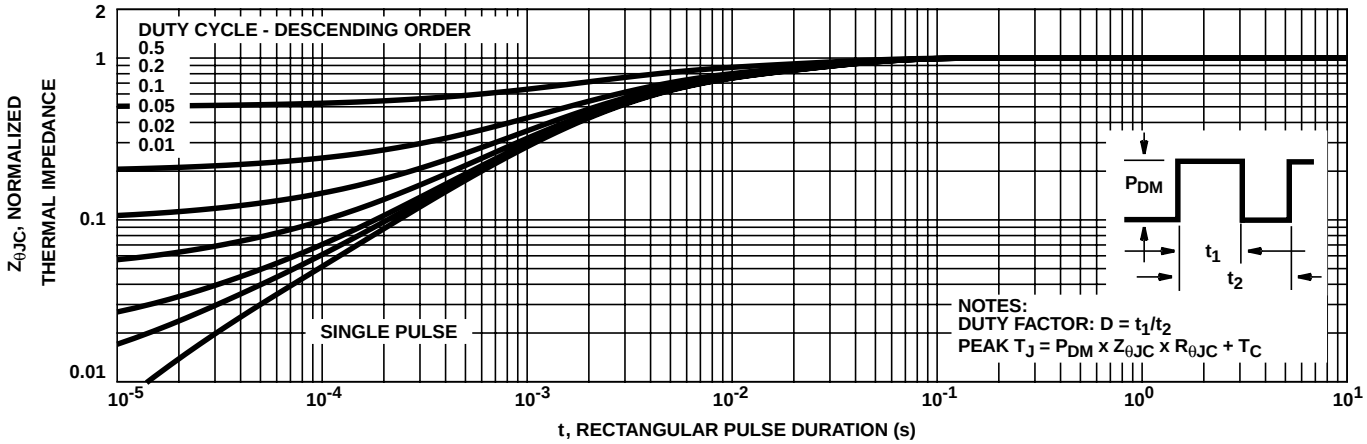

FIGURE 3. NORMALIZED MAXIMUM TRANSIENT THERMAL IMPEDANCE

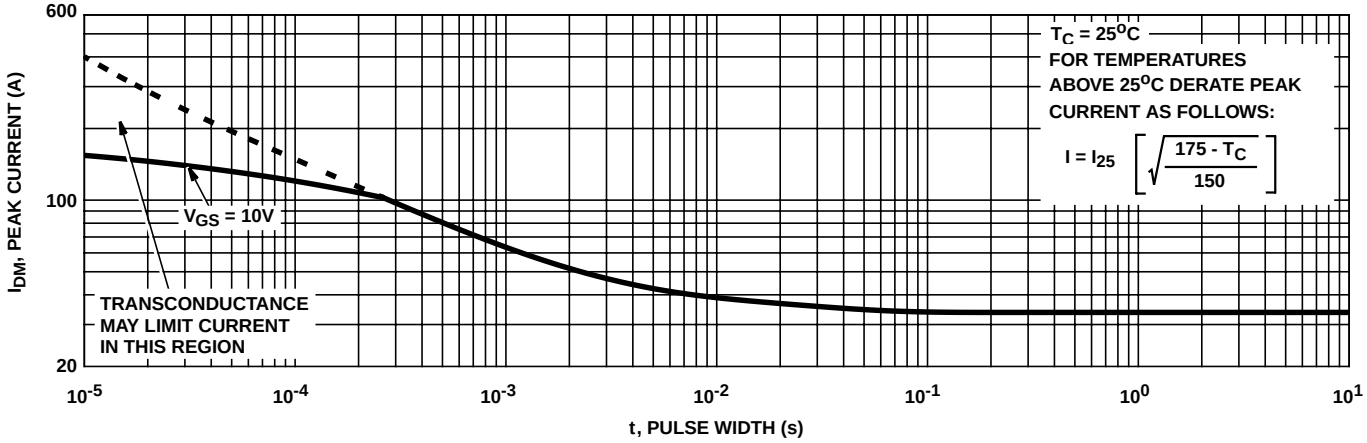

FIGURE 4. PEAK CURRENT CAPABILITY

Typical Performance Curves (Continued)

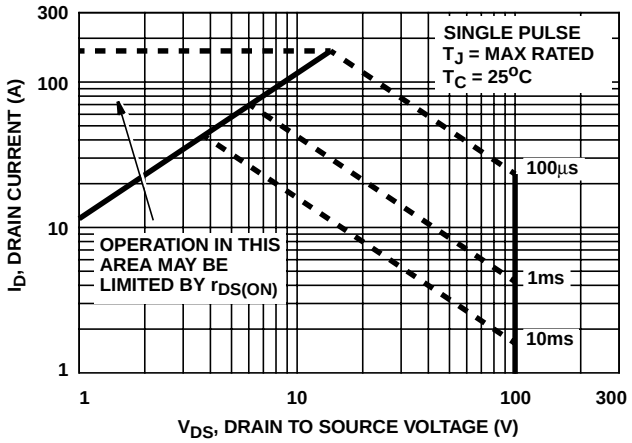

FIGURE 5. FORWARD BIAS SAFE OPERATING AREA

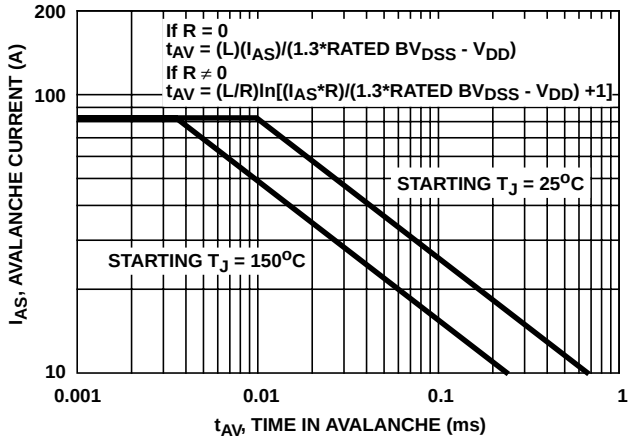

NOTE: Refer to Intersil Application Notes AN9321 and AN9322.

FIGURE 6. UNCLAMPED INDUCTIVE SWITCHING CAPABILITY

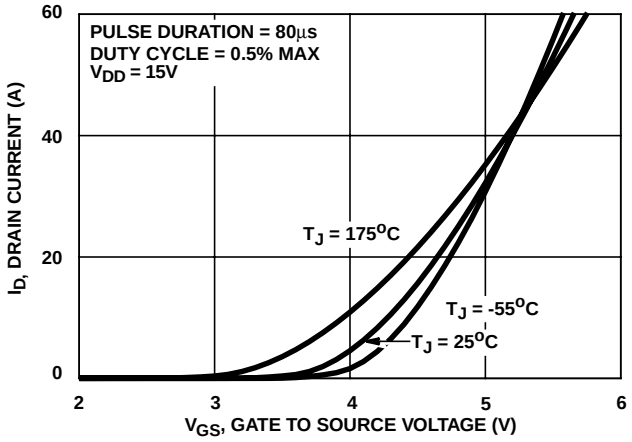

FIGURE 7. TRANSFER CHARACTERISTICS

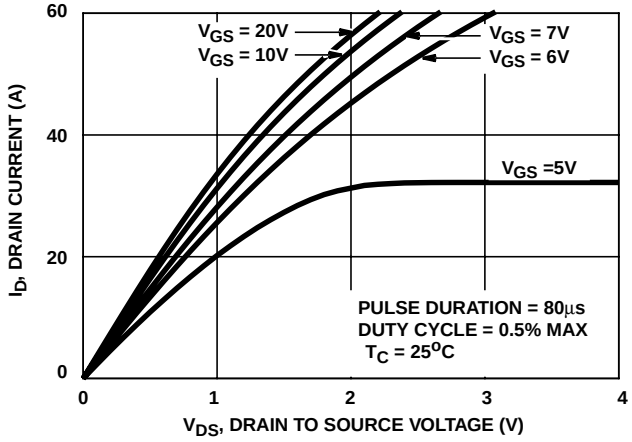

FIGURE 8. SATURATION CHARACTERISTICS

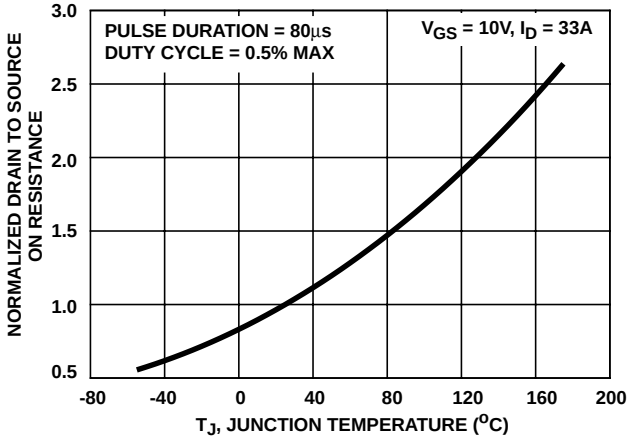

FIGURE 9. NORMALIZED DRAIN TO SOURCE ON RESISTANCE vs JUNCTION TEMPERATURE

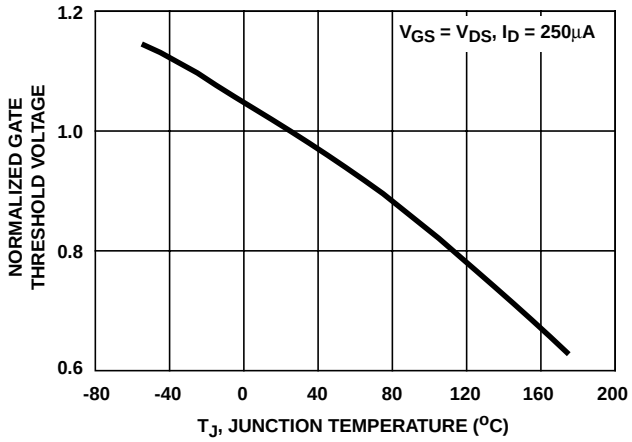

FIGURE 10. NORMALIZED GATE THRESHOLD VOLTAGE vs JUNCTION TEMPERATURE

Typical Performance Curves (Continued)

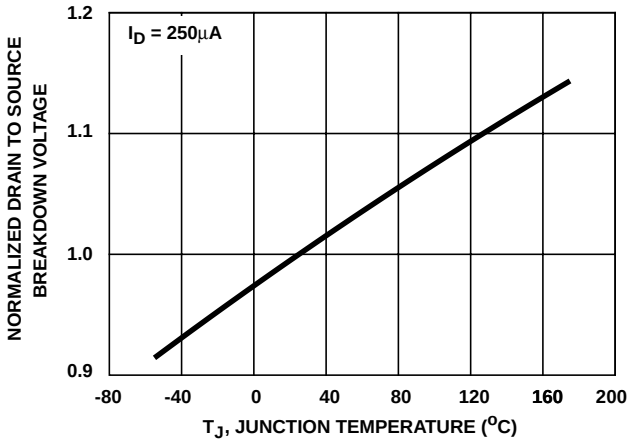

FIGURE 11. NORMALIZED DRAIN TO SOURCE BREAKDOWN VOLTAGE vs JUNCTION TEMPERATURE

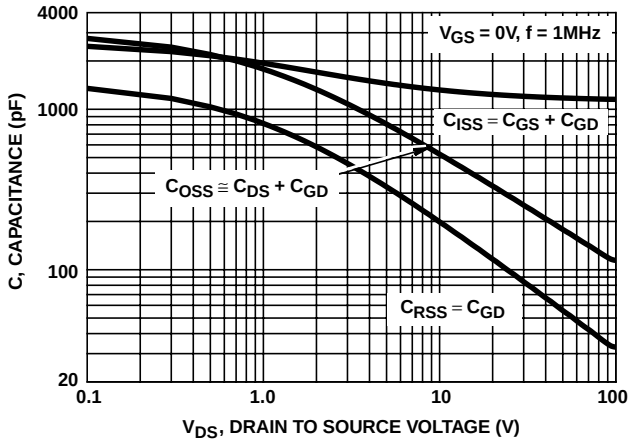

FIGURE 12. CAPACITANCE vs DRAIN TO SOURCE VOLTAGE

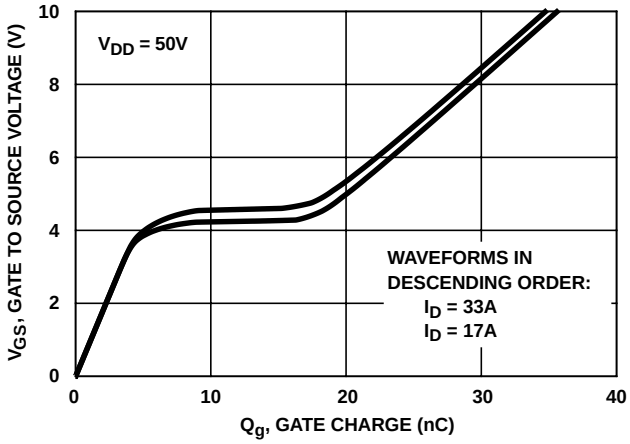

NOTE: Refer to Intersil Application Notes AN7254 and AN7260.

FIGURE 13. GATE CHARGE WAVEFORMS FOR CONSTANT GATE CURRENT

Test Circuits and Waveforms

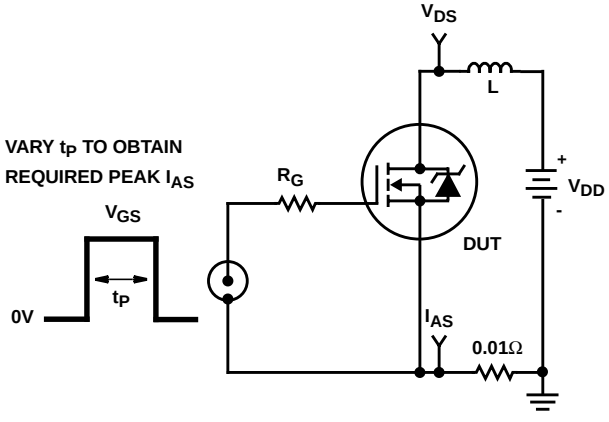

FIGURE 14. UNCLAMPED ENERGY TEST CIRCUIT

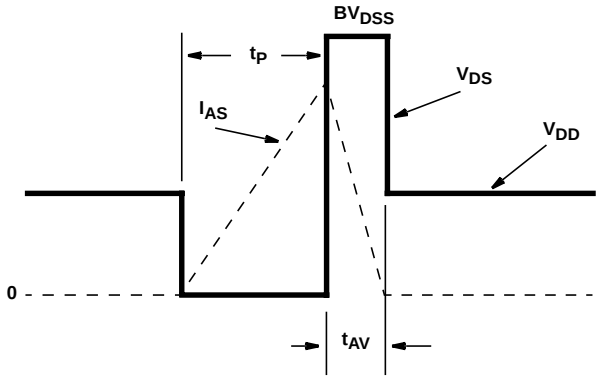

FIGURE 15. UNCLAMPED ENERGY WAVEFORMS

Test Circuits and Waveforms (Continued)

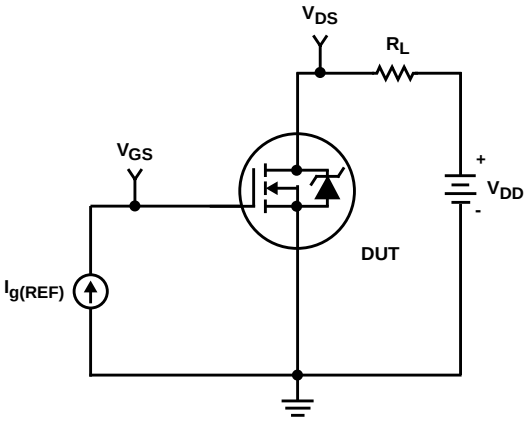

FIGURE 16. GATE CHARGE TEST CIRCUIT

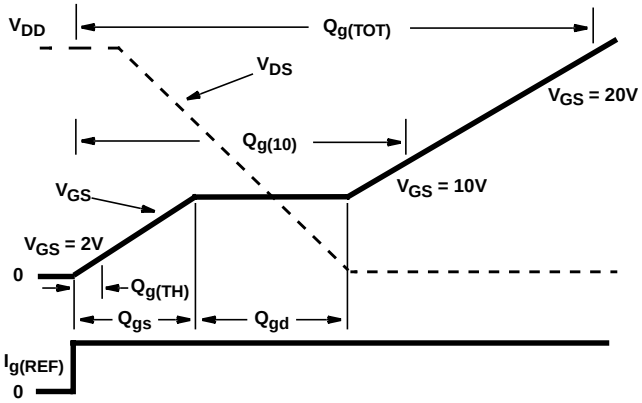

FIGURE 17. GATE CHARGE WAVEFORMS

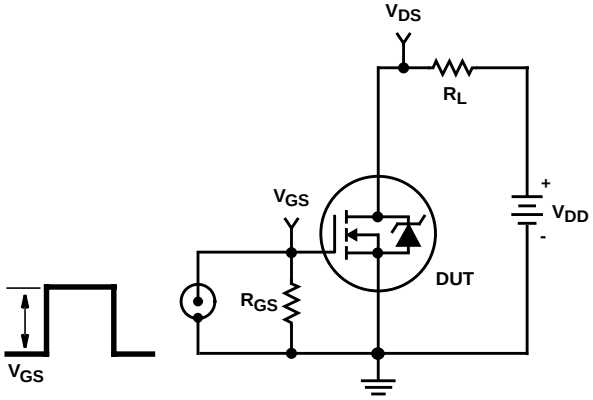

FIGURE 18. SWITCHING TIME TEST CIRCUIT

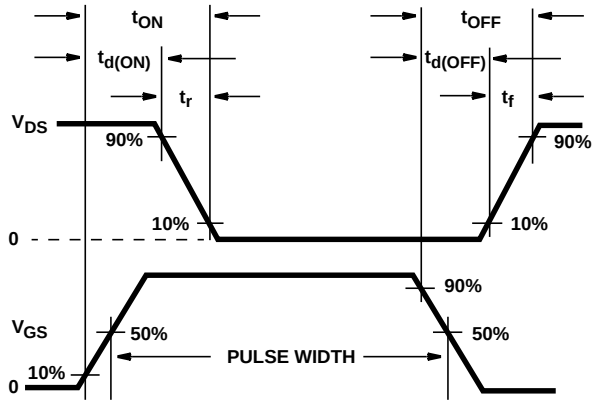

FIGURE 19. SWITCHING TIME WAVEFORM

PSPICE Electrical Model

.SUBCKT IRFP140N 2 1 3 ; rev 15 Jan 2000

CA 12 8 1.95e-9
CB 15 14 1.90e-9
CIN 6 8 1.12e-9

DBODY 7 5 DBODYMOD
DBREAK 5 11 DBREAKMOD
DPLCAP 10 5 DPLCAPMOD

EBREAK 11 7 17 18 112.8
EDS 14 8 5 8 1
EGS 13 8 6 8 1
ESG 6 10 6 8 1
EVTHRES 6 21 19 8 1
EVTEMP 20 6 18 22 1

IT 8 17 1

LDRAIN 2 5 1.0e-9
LGATE 1 9 6.19e-9
LSOURCE 3 7 2.18e-9

MMED 16 6 8 8 MMEDMOD
MSTRO 16 6 8 8 MSTROMOD
MWEAK 16 21 8 8 MWEAKMOD

RBREAK 17 18 RBREAKMOD 1
RDRAIN 50 16 RDRAINMOD 2.00e-2
RGATE 9 20 1.77
RLDRAIN 2 5 10
RLGATE 1 9 26
RLSOURCE 3 7 11
RSLC1 5 51 RSLCMOD 1e-6
RSLC2 5 50 1e3
RSOURCE 8 7 RSOURCEMOD 6.5e-3
RVTHRES 22 8 RVTHRESMOD 1
RVTEMP 18 19 RVTEMPMOD 1

S1A 6 12 13 8 S1AMOD
S1B 13 12 13 8 S1BMOD
S2A 6 15 14 13 S2AMOD
S2B 13 15 14 13 S2BMOD

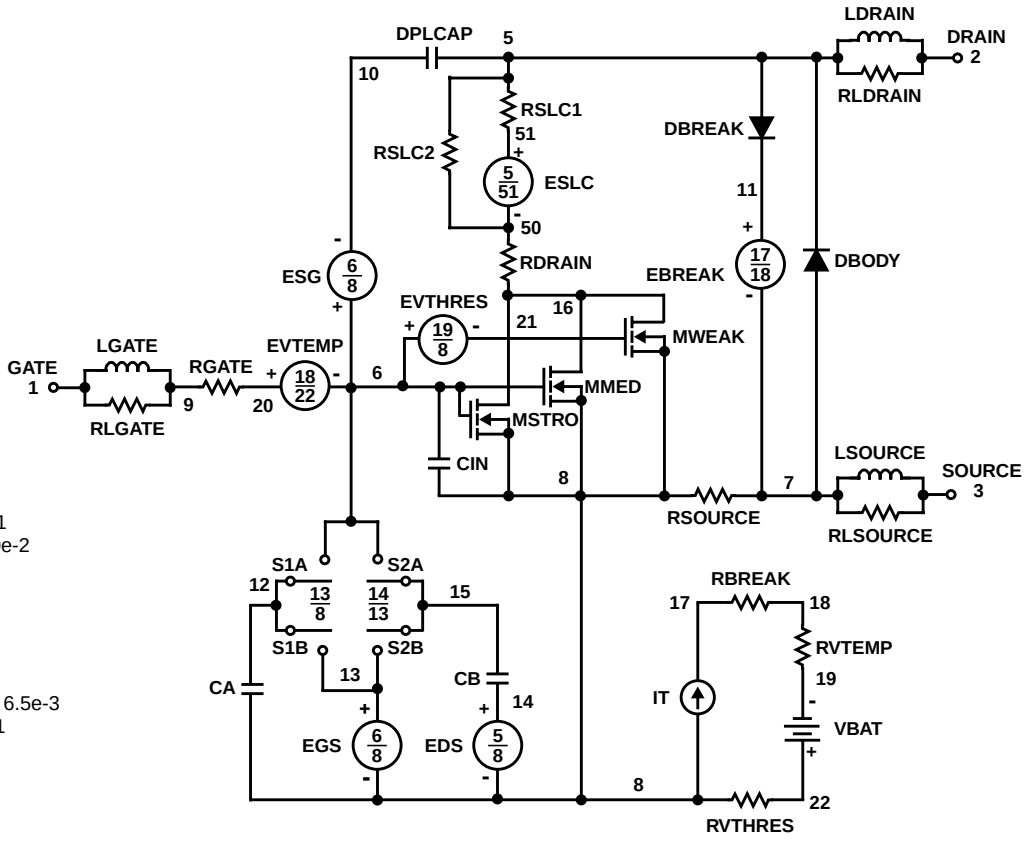

VBAT 22 19 DC 1

ESLC 51 50 VALUE={(V(5,51)/ABS(V(5,51)))*(PWR(V(5,51)/(1e-6*71),3.5))}

.MODEL DBODYMOD D (IS = 1.20e-12 RS = 4.2e-3 XTI = 5 TRS1 = 1.3e-3 TRS2 = 8.0e-6 CJO = 1.50e-9 TT = 7.47e-8 M = 0.63)
.MODEL DBREAKMOD D (RS = 4.2e-1 TRS1 = 8e-4 TRS2 = 3e-6)
.MODEL DPLCAPMOD D (CJO = 1.45e-9 IS = 1e-30 M = 0.82)
.MODEL MMEDMOD NMOS (VTO = 3.11 KP = 5 IS = 1e-30 N = 10 TOX = 1 L = 1u W = 1u RG = 1.77)
.MODEL MSTROMOD NMOS (VTO = 3.57 KP = 33.5 IS = 1e-30 N = 10 TOX = 1 L = 1u W = 1u)
.MODEL MWEAKMOD NMOS (VTO = 2.68 KP = 0.09 IS = 1e-30 N = 10 TOX = 1 L = 1u W = 1u RG = 17.7)
.MODEL RBREAKMOD RES (TC1 =1.05e-3 TC2 = -5e-7)
.MODEL RDRAINMOD RES (TC1 = 9.40e-3 TC2 = 2.93e-5)
.MODEL RSLCMOD RES (TC1 = 3.5e-3 TC2 = 2.0e-6)
.MODEL RSOURCEMOD RES (TC1 = 1e-3 TC2 = 1e-6)
.MODEL RVTHRESMOD RES (TC1 = -1.8e-3 TC2 = -8.6e-6)
.MODEL RVTEMPMOD RES (TC1 = -3.0e-3 TC2 =1.5e-7)

.MODEL S1AMOD VSWITCH (RON = 1e-5 ROFF = 0.1 VON = -6.2 VOFF= -3.1)
.MODEL S1BMOD VSWITCH (RON = 1e-5 ROFF = 0.1 VON = -3.1 VOFF= -6.2)
.MODEL S2AMOD VSWITCH (RON = 1e-5 ROFF = 0.1 VON = -1.0 VOFF= 0.5)
.MODEL S2BMOD VSWITCH (RON = 1e-5 ROFF = 0.1 VON = 0.5 VOFF= -1.0)

.ENDS

NOTE: For further discussion of the PSPICE model, consult **A New PSPICE Sub-Circuit for the Power MOSFET Featuring Global Temperature Options**; IEEE Power Electronics Specialist Conference Records, 1991, written by William J. Hepp and C. Frank Wheatley.

SABER Electrical Model

REV 15 Jan 2000

```
template IRFP140N n2,n1,n3
electrical n2,n1,n3
{
var i iscl
d..model dbodymod =  (is = 1.20e-12, cjo = 1.50e-9, tt = 7.47e-8, xti = 5, m = 0.63)
d..model dbreakmod = ()
d..model dplcapmod =  (cjo = 1.45e-9, is = 1e-30, m = 0.82)
m..model mmedmod = (type=_n, vto = 3.11, kp = 5, is = 1e-30, tox = 1)
m..model mstrongmod = (type=_n, vto = 3.57, kp = 33.5, is = 1e-30, tox = 1)
m..model mweakmod = (type=_n, vto = 2.68, kp = 0.09, is = 1e-30, tox = 1)
sw_vcsp..model s1amod =  (ron = 1e-5, roff = 0.1, von = -6.2, voff = -3.1)
sw_vcsp..model s1bmod =  (ron =1e-5, roff = 0.1, von = -3.1, voff = -6.2)
sw_vcsp..model s2amod =  (ron = 1e-5, roff = 0.1, von = -1.0, voff = 0.5)
sw_vcsp..model s2bmod =  (ron = 1e-5, roff = 0.1, von = 0.5, voff = -1.0)

c.ca n12 n8 = 1.95e-9
c.cb n15 n14 = 1.90e-9
c.cin n6 n8 = 1.12e-9

d.dbody n7 n71 = model=dbodymod
d.dbreak n72 n11 = model=dbreakmod
d.dplcap n10 n5 = model=dplcapmod

i.it n8 n17 = 1

l.ldrain n2 n5 = 1e-9
l.lgate n1 n9 = 6.19e-9
l.lsource n3 n7 = 2.18e-9

m.mmed n16 n6 n8 n8 = model=mmedmod, l=1u, w=1u
m.mstrong n16 n6 n8 n8 = model=mstrongmod, l=1u, w=1u
m.mweak n16 n21 n8 n8 = model=mweakmod, l=1u, w=1u

res.rbreak n17 n18  = 1, tc1 = 1.05e-3, tc2 = -5.0e-7
res.rdbody n71 n5 = 4.2e-3, tc1 = 1.30e-3, tc2 = 8.0e-6
res.rdbreak n72 n5 = 4.2e-1, tc1 = 8.0e-4, tc2 = 3.0e-6
res.rdrain n50 n16  = 2.00e-2, tc1 = 9.40e-3, tc2 = 2.93e-5
res.rgate n9 n20 = 1.77
res.rldrain n2 n5 = 10
res.rlgate n1 n9 = 26
res.rlsource n3 n7 = 11
res.rslc1 n5 n51  = 1e-6, tc1 = 3.5e-3, tc2 = 2.0e-6
res.rslc2 n5 n50 = 1e3
res.rsource n8 n7  = 6.5e-3, tc1 = 1e-3, tc2 = 1e-6
res.rvtemp n18 n19  = 1, tc1 = -3.0e-3, tc2 = 1.5e-7
res.rvthres n22 n8  = 1, tc1 = -1.8e-3, tc2 = -8.6e-6

spe.ebreak n11 n7 n17 n18 = 112.8
spe.eds n14 n8 n5 n8 = 1
spe.egs n13 n8 n6 n8 = 1
spe.esg n6 n10 n6 n8 = 1
spe.evtemp n20 n6 n18 n22 = 1
spe.evthres n6 n21 n19 n8 = 1

sw_vcsp.s1a n6 n12 n13 n8 = model=s1amod
sw_vcsp.s1b n13 n12 n13 n8 = model=s1bmod
sw_vcsp.s2a n6 n15 n14 n13 = model=s2amod
sw_vcsp.s2b n13 n15 n14 n13 = model=s2bmod

v.vbat n22 n19 = dc=1

equations {
i (n51->n50) +=iscl
iscl: v(n51,n50) = ((v(n5,n51)/(1e-9+abs(v(n5,n51))))*((abs(v(n5,n51)*1e6/71))** 3.5))
}
}
```

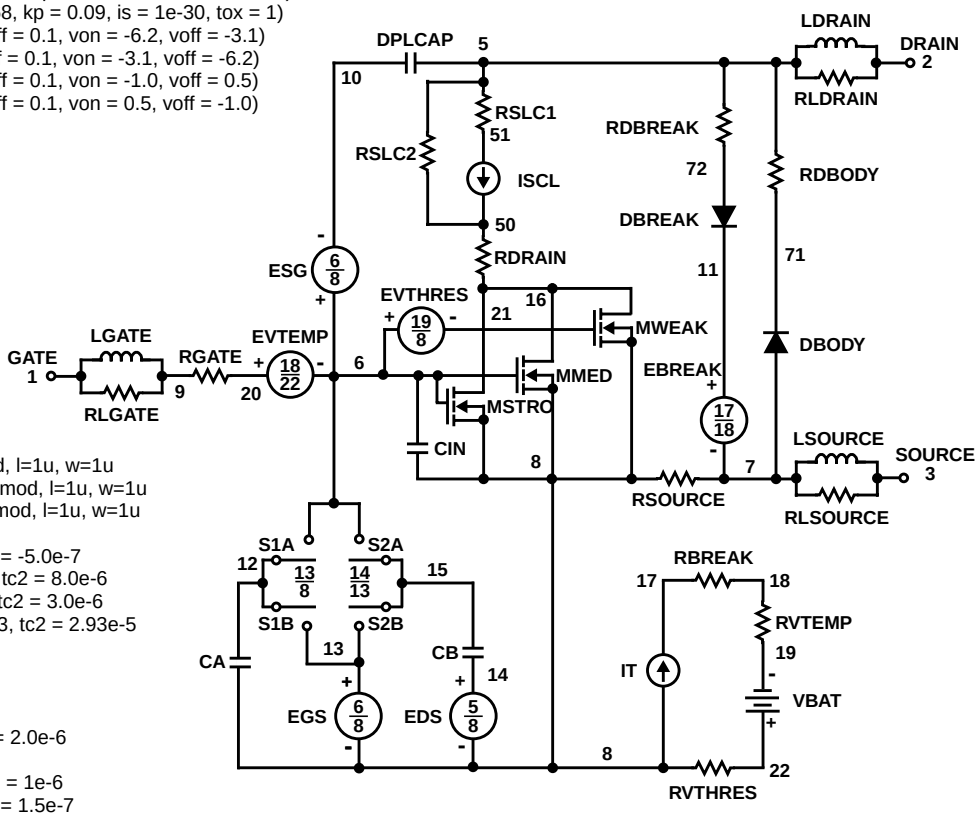

SPICE Thermal Model

REV 15 Jan 2000

IRFP140NT

CTHERM1 th 6 2.60e-3
CTHERM2 6 5 8.85e-3
CTHERM3 5 4 7.60e-3
CTHERM4 4 3 7.65e-3
CTHERM5 3 2 1.22e-2
CTHERM6 2 tl 8.70e-2

RTHERM1 th 6 9.00e-3
RTHERM2 6 5 1.80e-2
RTHERM3 5 4 9.15e-2
RTHERM4 4 3 2.43e-1
RTHERM5 3 2 3.10e-1
RTHERM6 2 tl 3.21e-1

SABER Thermal Model

SABER thermal model IRFP140NT

```
template thermal_model th tl
thermal_c th, tl
{
ctherm.ctherm1 th 6 = 2.60e-3
ctherm.ctherm2 6 5 = 8.85e-3
ctherm.ctherm3 5 4 = 7.60e-3
ctherm.ctherm4 4 3 = 7.65e-3
ctherm.ctherm5 3 2 = 1.22e-2
ctherm.ctherm6 2 tl = 8.70e-2

rtherm.rtherm1 th 6 = 9.00e-3
rtherm.rtherm2 6 5 = 1.80e-2
rtherm.rtherm3 5 4 = 9.15e-2
rtherm.rtherm4 4 3 = 2.43e-1
rtherm.rtherm5 3 2 = 3.10e-1
rtherm.rtherm6 2 tl = 3.21e-1
}
```

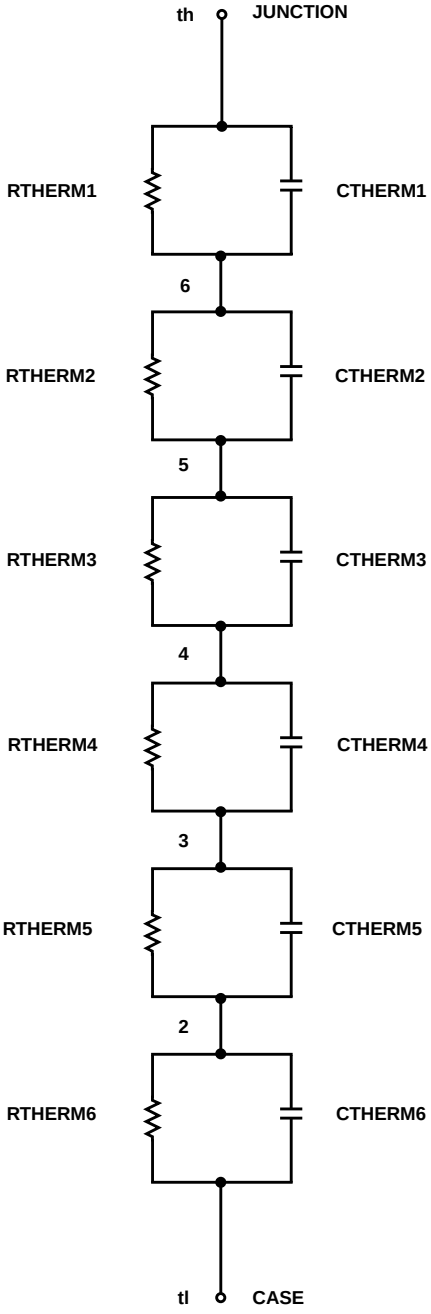

TO-247

3 LEAD JEDEC STYLE TO-247 PLASTIC PACKAGE

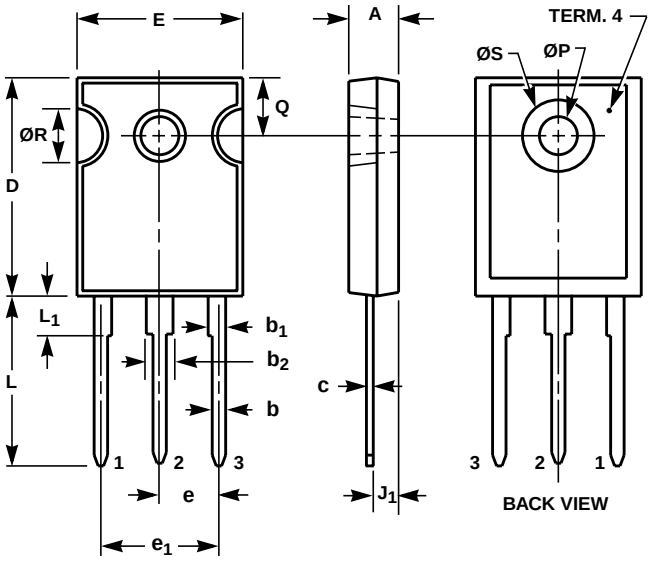

SYMBOL	INCHES		MILLIMETERS		NOTES
	MIN	MAX	MIN	MAX	
A	0.180	0.190	4.58	4.82	-
b	0.046	0.051	1.17	1.29	2, 3
b_1	0.060	0.070	1.53	1.77	1, 2
b_2	0.095	0.105	2.42	2.66	1, 2
c	0.020	0.026	0.51	0.66	1, 2, 3
D	0.800	0.820	20.32	20.82	-
E	0.605	0.625	15.37	15.87	-
e	0.219 TYP		5.56 TYP		4
e_1	0.438 BSC		11.12 BSC		4
J_1	0.090	0.105	2.29	2.66	5
L	0.620	0.640	15.75	16.25	-
L_1	0.145	0.155	3.69	3.93	1
ØP	0.138	0.144	3.51	3.65	-
Q	0.210	0.220	5.34	5.58	-
ØR	0.195	0.205	4.96	5.20	-
ØS	0.260	0.270	6.61	6.85	-

NOTES:

1. Lead dimension and finish uncontrolled in L_1.
2. Lead dimension (without solder).
3. Add typically 0.002 inches (0.05mm) for solder coating.
4. Position of lead to be measured 0.250 inches (6.35mm) from bottom of dimension D.
5. Position of lead to be measured 0.100 inches (2.54mm) from bottom of dimension D.
6. Controlling dimension: Inch.
7. Revision 1 dated 1-93.

All Intersil semiconductor products are manufactured, assembled and tested under **ISO9000** quality systems certification.

Intersil semiconductor products are sold by description only. Intersil Corporation reserves the right to make changes in circuit design and/or specifications at any time without notice. Accordingly, the reader is cautioned to verify that data sheets are current before placing orders. Information furnished by Intersil is believed to be accurate and reliable. However, no responsibility is assumed by Intersil or its subsidiaries for its use; nor for any infringements of patents or other rights of third parties which may result from its use. No license is granted by implication or otherwise under any patent or patent rights of Intersil or its subsidiaries.

For information regarding Intersil Corporation and its products, see web site **www.intersil.com**

Sales Office Headquarters

NORTH AMERICA
Intersil Corporation
P. O. Box 883, Mail Stop 53-204
Melbourne, FL 32902
TEL: (321) 724-7000
FAX: (321) 724-7240

EUROPE
Intersil SA
Mercure Center
100, Rue de la Fusee
1130 Brussels, Belgium
TEL: (32) 2.724.2111
FAX: (32) 2.724.22.05

ASIA
Intersil (Taiwan) Ltd.
7F-6, No. 101 Fu Hsing North Road
Taipei, Taiwan
Republic of China
TEL: (886) 2 2716 9310
FAX: (886) 2 2715 3029