查询MC33198供应商 捷多邦，专业PCB打样工厂，24小时加急出货

MOTOROLA
SEMICONDUCTOR
TECHNICAL DATA

Datasheet

Automotive High Side TMOS Driver

MC33198

HIGH SIDE TMOS DRIVER

SILICON MONOLITHIC INTEGRATED CIRCUIT

The MC33198D is a high side TMOS driver, dedicated for automotive applications. It is used in conjunction with an external power MOSFET for high side drive applications. The device can drive and protect a large variety of MOSFET. The device has CMOS compatible input control, charge pump to drive the MOSFET gate, fault detection circuitry based on programmable Vds monitoring to detect shorted load. It also includes a programmable timer function to eliminate undesired switch off due to in rush currents and a status pin which reports the output status in both on and off MOSFET state. The device uses few external components and offers an economical solution to large current high side switch. It also has PWM capability up to 1kHz.

- Designed for Automotive High Side Driver Application
- Works with a Wide Variety of N-Channel Power MOSFETs
- PWM Capability
- On Board Charge Pump Capable of Charging 25nF in less than 1ms with No External Components Required
- Drive Inductive Load with No External Clamp Circuitry Required
- CMOS Logic Compatible Input Control
- TMOS Over Current and Short Circuit Protection
- Fault Output to Report an Over MOSFET Current Condition
- Output Status Available when MOSFET is On or Off
- Extended Temperature Range from -40°C to 125°C
- Protected Against Automotive Transients with few External Components
- Over Voltage and Under Voltage Shutdown

D SUFFIX
PLASTIC PACKAGE
CASE 751-02
SO-8

PIN ASSIGNMENT

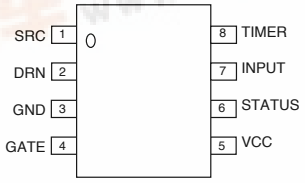

ORDERING INFORMATION		
Device	Temperature Range	Package
MC33198D	- 40°C to+125°C	SO8

Block Diagram and Typical Application

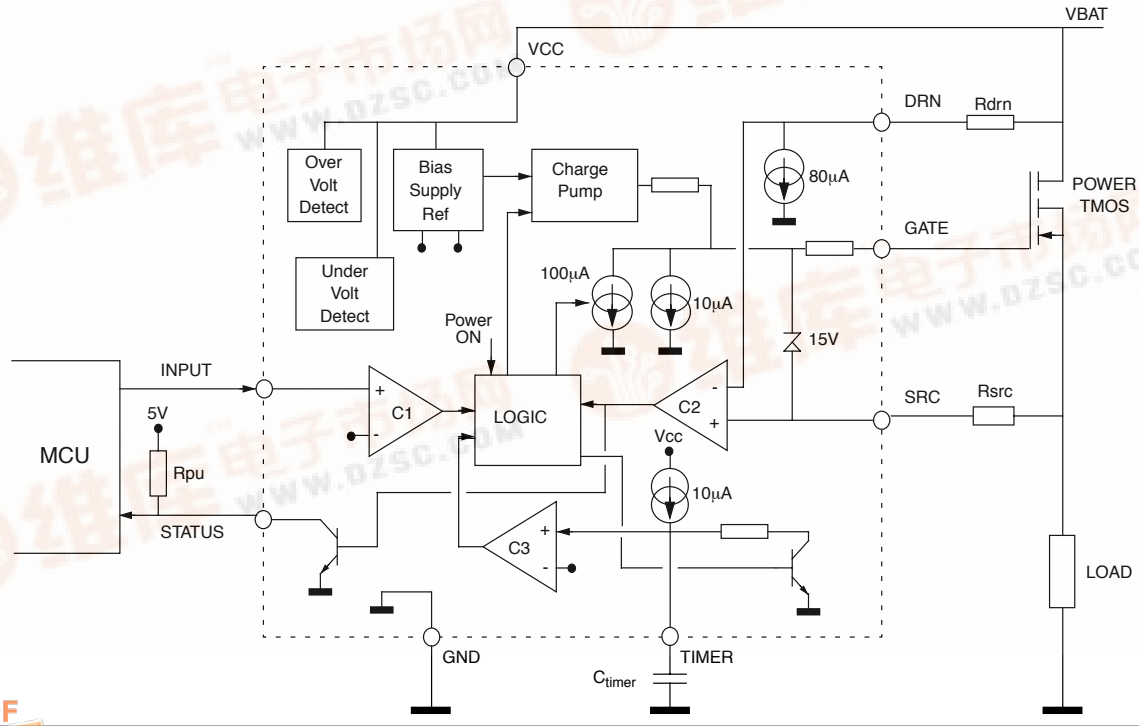

This document contains information on a new product under development. Motorola reserves the right to change or discontinue this product without notice.
© Motorola,Inc

找PDF 维库一下 pdf.dzsc.com

MAXIMUM RATINGS

Ratings	Symbol	Value	Unit
ELECTRICAL RATINGS			
Power Supply Voltage (Pin 5)	Vcc	- 0,6 to 60	V
TMOS Source Voltage (Pin 1)	Vsrc	- 0,6 to 60	V
Comparator Threshold (Pin 2)	Vdrn	- 0,6 to 60	V
Gate Output Voltage (Pin 4)	Vgate	- 0,6 to 25	V
Input Voltage (Pin 7)	Vin	- 0,6 to 25	V
Status (Pin 6)	Vst	- 0,6 to 10	V
ESD Voltage Capability	V(ESD)	+/-2000	V
THERMAL RATINGS			
Storage Temperature	Tstg	-55 to +150	°C
Operating Junction Temperature	Tj	-40 to +150	°C
Thermal Resistance J/A	Rj	145	°C

ELECTRICAL CHARACTERISTICS. Tamb from - 40°C to +125°C, Vcc from 7V to 20V, unless otherwise note. Typical values reflect approximate mean at 25°C, nominal VCC, at time of device characterization.

Parameters	Symbol	Min	Typ	Max	Unit
SRC Pin 1					
Leakage Current	Ilsrc	-10		10	μA
DRN Pin 2					
Threshold Current	Ithr	54	81	102	uA
DRN Leakage, Input Off, Vcc Pin Open	Ileak			10	μA
GATE Pin 4					
Output On Voltage at 1ms (Charge Pump ON)	Von	Vcc + 7		Vcc+15	V
Turn Off Current - with NO Over Vds condition and Vout >0.5V - with Over Vds condition and Vout >0.5V	 Ioutn Ioutw	 70 5	 110 10	 150 15	 μA μA
Output Off Voltage. (Charge Pump OFF and Vcc Pin Open)	Voff	0		0.9	V
Gate Discharge Current. (Vcc Pin Open)	Ioff		5		μA
Turn On Time - Cl = 25nF ; 7V < Vcc < 10V ; Vout > Vcc+7 - Cl = 25nF ; 10V < Vcc < 20V ; Vout > Vcc+10	ton			 1 1	ms
VCC Pin 5					
Supply Voltage Range	Vcc	7		20	V
Quiescent Supply Current ; In = 0V - at Vcc = 7V - at Vcc = 20V	Iccq		 1.8 2.8	 4 6	mA
Supply Current ; In = 5V	Icc	1		35	mA
Over Voltage Threshold	V_{ov}	22	28	34	V
Under Voltage Threshold	V_{ur}		6	7	V

ELECTRICAL CHARACTERISTICS. Tamb from - 40°C to +125°C, Vcc from 7V to 20V, unless otherwise note. Typical values reflect approximate mean at 25°C, nominal VCC, at time of device characterization.

Parameters	Symbol	Min	Typ	Max	Unit
STATUS Pin 6					
Output Voltage @I = 1mA	V_{ol}	0,1	0,4	1.5	V
INPUT Pin 7					
Input Low Voltage	Vil			1.5	V
Input High Voltage	Vih	3.5			V
Input Hysteresis	Vhys	0.8			V
Input Pull Down Resistor. Vin >11V	Rin	20	36	100	kΩ
Open Input Voltage	Viop			1	V
TIMER Pin 8					
Timer Current	Itime	7	10	14	μA
On Threshold	Vhth	5.2	5.5	5.8	V
Discharge Current @V_{pin8} = 5V	Idisch	2	5	10	mA
Saturation Voltage @I_{pin8} = 1mA	Vsat		0,15	0.4	V

DYNAMIC ELECTRICAL CHARACTERISTICS

Parameters	Vcc = 7V	Vcc = 14V	Vcc = 21V	Unit
TYPICAL RISE TIME (t_r) versus Gate External Capacitor Load and Supply Voltage (refer to figure 1)				
C = 1nF	15	7	10	μs
C = 3nF	60	25	40	μs
C = 10nF	140	80	90	μs
C = 30nF	730	270	340	μs
TYPICAL FALL TIME (t_f) versus Gate External Capacitor Load and Supply Voltage (refer to figure 1)				
C = 1nF	150	230	280	μs
C = 3nF	430	800	950	μs
C = 10nF	1200	2300	2750	μs
C = 30nF	4800	8000	9200	μs

Figure 1. Timing Measurement Test Schematic

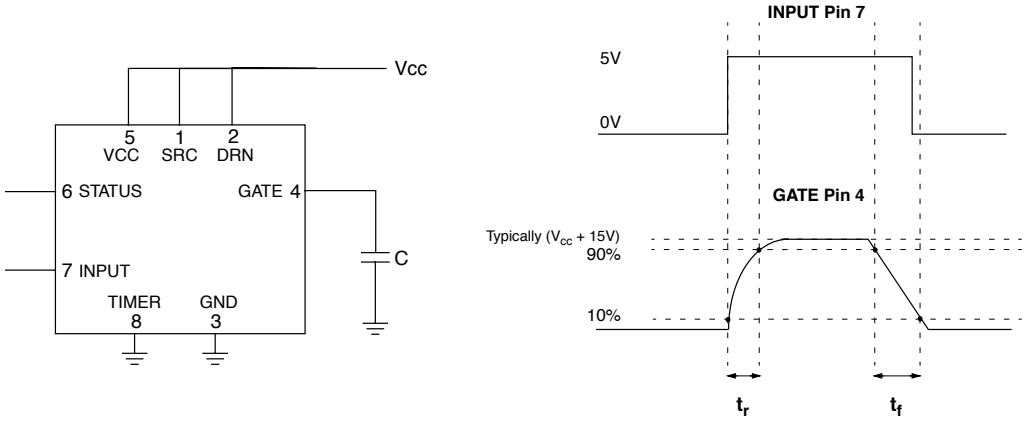

Figure 2. **Supply Current versus Supply Voltage. Pin 7 = 0V**

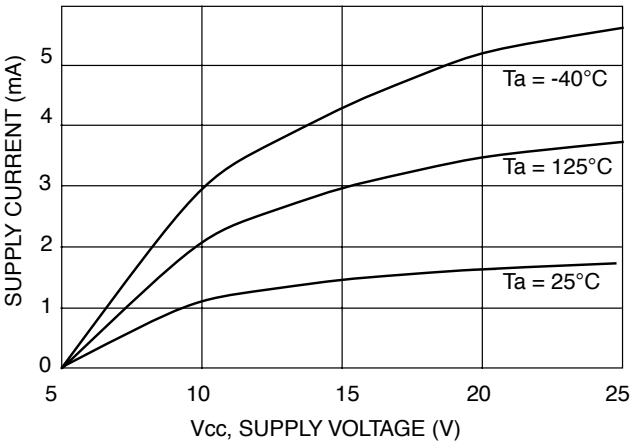

Figure 3. **Supply Current versus Supply Voltage. Pin 7 = 5V**

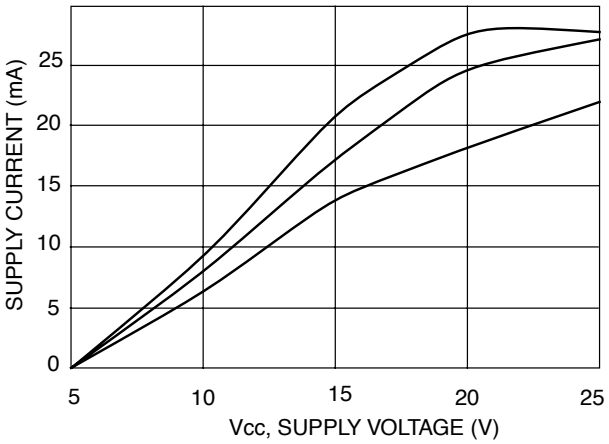

Figure 4. **Time Current versus Supply Voltage**

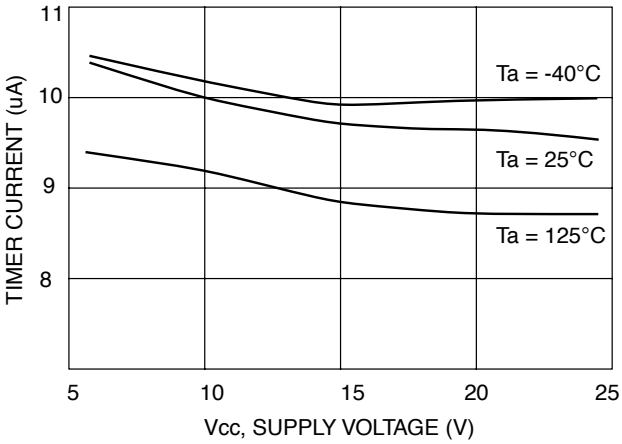

Figure 5. **Drain Current versus Supply Voltage**

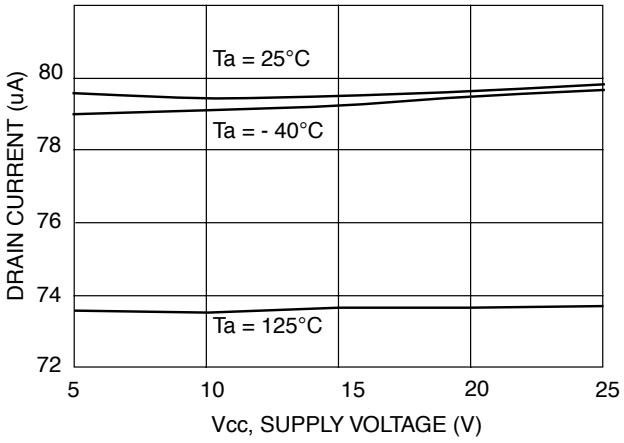

Figure 6. **Fault Output Voltage versus Current**

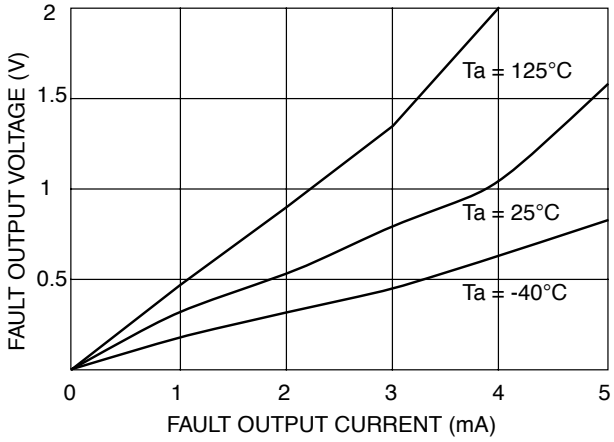

Figure 7. **Gate Voltage versus Voltage**

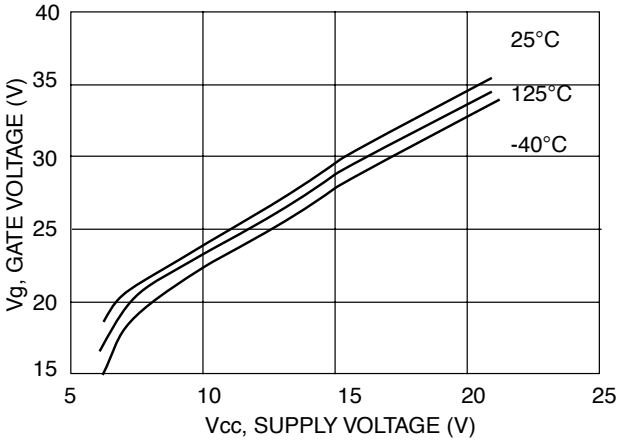

Figure 8. **Gate Voltage versus Gate Output Current. Ta = 25°C.**

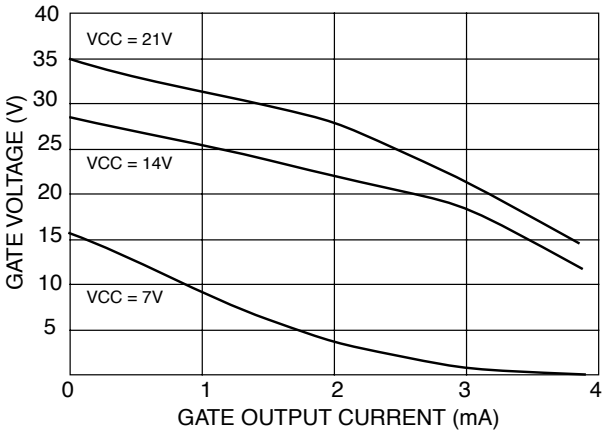

Figure 9. **Gate Voltage versus Gate Output Current. Ta = 125°C**

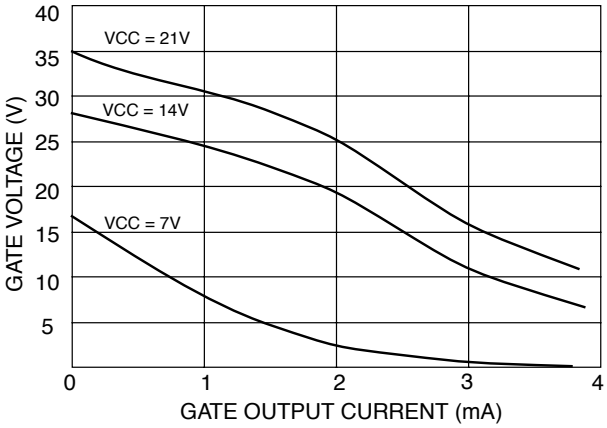

Figure 10. **Gate Voltage versus Gate Output Current. Ta = 40°C**

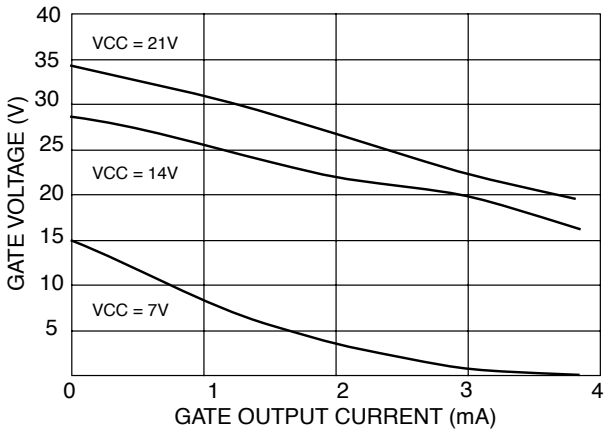

Figure 11. **Gate Voltage versus Vcc and R_g at Ta = 25°C**

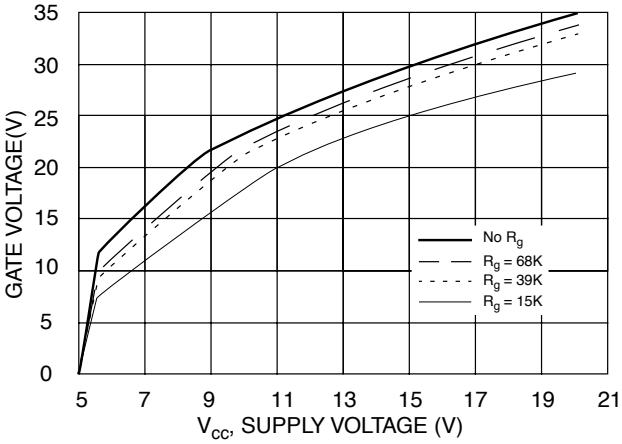

Figure 12. Descriptive Waveform Diagram

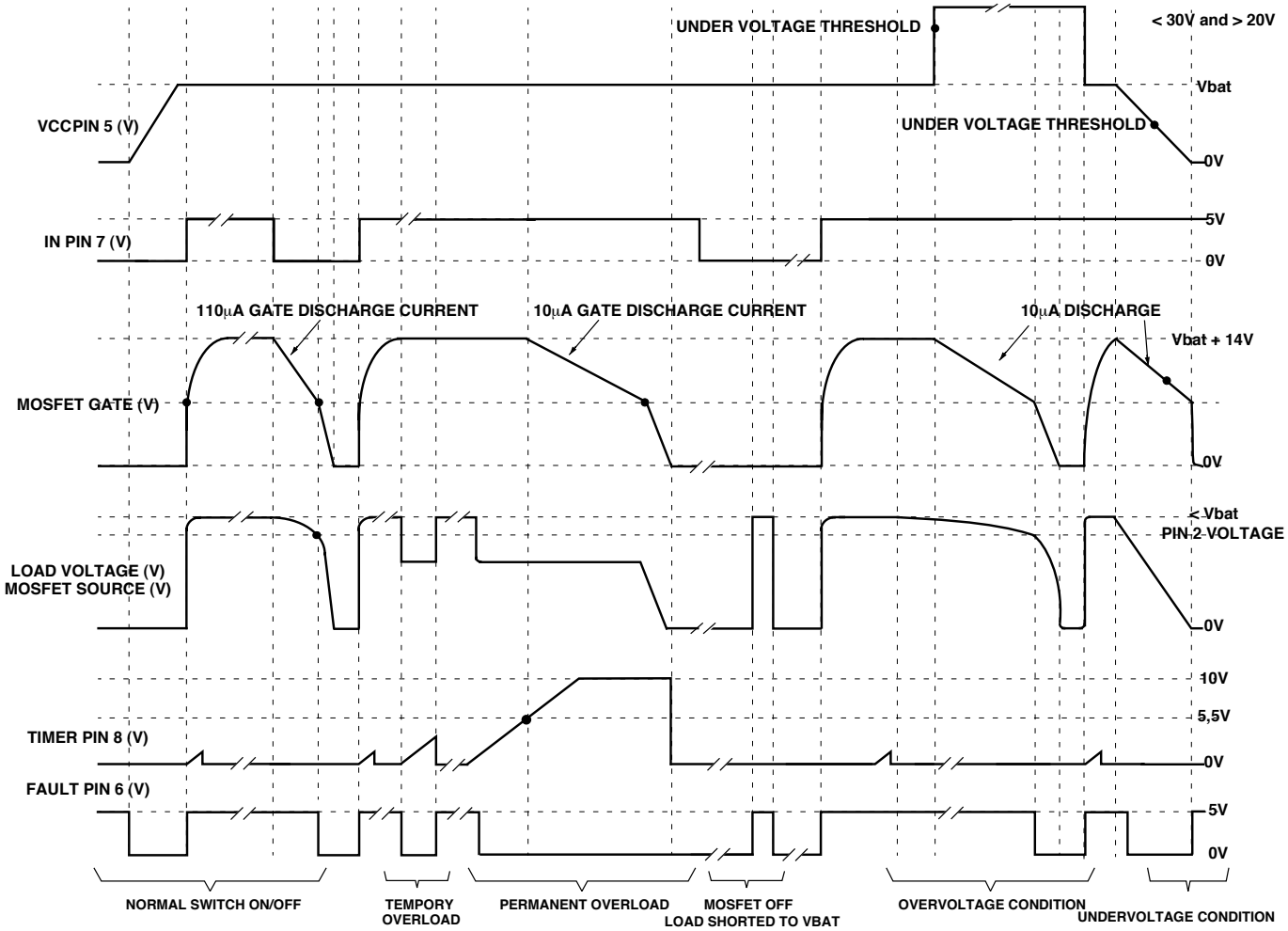

GATE VOLTAGE (V)

DEVICE DESCRIPTION

Introduction

The MC33198D is a high side TMOS driver, dedicated for automotive applications. It is used in conjunction with an external power MOSFET for high side drive applications. The device can drive and protect a large variety of MOSFET. The device has CMOS compatible input control, charge pump to drive the MOSFET gate, fault detection circuitry based on programmable Vds monitoring to detect shorted load. It also includes a programmable timer function to eliminate undesired switch off due to in rush currents and a status pin which reports the output status in both on and off MOSFET state. The device uses few external components and offers an economical solution to large current high side switch. It also has PWM capability up to 1kHz.

Power Supply

The MC33198D can be supplied from the battery line. It is designed in a 60V technology, making it able to sustain up to 60V transient pulses. In off state, with pin 7 low, the supply current is up to 5mA, and in operation, pin 7 high, the current up to 25mA. The device has an undervoltage detection and shutdown near 7V. Below this value the MOSFET is turned off. There is also a 25V overvoltage detection which switches off the output pin 4 to protect both MOSFET and load when V_{cc} is higher than 25V.

Charge Pump

The device incorporates a self running charge pump with internal capacitor and connected at Gate pin 4. To prevent oscillation, a serial resistor can be added. The charge pump is able to charge a 25nF capacitor in less than 1ms. This allows the MC33198D to have a rapid response time and to drive the external TMOS gate very quickly, allowing fast switching on of the load. The device has an internal 14V zener diode between pin 4 and 1 to clamp the Gate-to-Source voltage and protect the MOSFET gate oxyde from destruction. See Dynamic Electrical Characteristics table for details.

Band Gap and Reference Currents

The MC33198D has an internal band gap reference voltage which generates all the internal thresholds. This band gap is also used to generate internal reference currents necessary for proper operation of the device.
These currents are :

Pin 2 : Drain current (typically 80μA).

Pin 4 : High and low gate discharge currents (typically 100μA and 10μA).

Pin 8 : Timer charge current (10μA typical).

All these currents are derivated from the same reference voltage and internal resistor. Their accuracy and variability is approximately +-25% over the full temperature and voltage range. In addition, a passive pull down current of 5μA maintains the gate of the MOSFET below 0.9V when the device has no supply, ensuring that the MOSFETremains off. This passive pulldown current is operating even if device V_{cc} (pin 5) is not powered up.

Input Circuitry

The input of the device is CMOS compatible and can be directly connected to a microcontroller. The input current is determined by an internal pull down resistor of typically 36kΩ. A hysteresis of 0.8 V minimum is present at this input.

Output Status

The device has a status output (pin 6) which has an open collector structure. This pin is used to report the MOSFET over load condition or the LOAD status when MOSFET is off. The device Pin 1 (Source) is compared to a programmable threshold at Pin 2, in both on and off state of the MOSFET. This allows the detection of MOSFET over Vds or over load conditions when MOSFET is on and load short to Vbat monitoring when MOSFET is in off state. This status pin is normally connected to a pull-up resistor and to a micro input and can drive up to 1mA. See below for detailed operation.

Timer

The timer (pin 8) is used in conjunction with an external capacitor to create a delay between the over load detection and the shutdown of the MOSFET. In case of over load, the internal current source pin 8 will charge the capacitor. When the voltage at pin 8 reaches the 5.5V threshold, the internal C3 comparator will be triggered and switch off the output to protect the MOSFET. The fault and the MOSFET turn off condition are latched and are reset by switching the input off and on. The delay between over load detection and actual MOSFET turn off is used to allow temporary over load wich will prevent the system from switching off during possible in-rush current or transients.

MOSFET Protection and Output Voltage Monitoring

The MC33198D has the ability to sense the output MOSFET source voltage and compare it to a predetermined threshold. This threshold is programmable using the internal reference current of 80μA and an external resistor connected at pin 2. The device can monitor the output load voltage, as well as protect the MOSFET in case of over load.

The over load detection threshold must be adapted to the MOSFET itself depending on the load to be driven and the thermal capability of the MOSFET. In practice, the maximum acceptable Vds of the MOSFET should be determined and based upon MOSFET maximum power dissipation.

In addition, the pin 8 capacitor value should be calculated to allow inrush current.

Source (Pin1) and Drain (Pin2) Functionality

These two pins are used to sense the MOSFET and load conditions. Pin 2 is connected to the internal pull down current source of 80μA and to the C2 comparator. An external resistor connected between pin 2 and V_{bat} creates a voltage drop across this resistor. The voltage drop will be the MOSFET maximum acceptable drain to source voltage and the C2 comparator threshold.

Pin 1 is connected to the MOSFET source pin. Two different cases should be considered, MOSFET on or off :

When MOSFET is on and working in normal conditions, the Vds should be less than the voltage developed at pin 2. So, the C2 comparator output is low and the status is high. No current will flow through the pin 8 capacitor.

If the MOSFET encounters an over-load or if the load is shorted to Gnd, the voltage at the source will cross pin 2 voltage and go below this pin 2 voltage, thereby turning on the C2 comparator. The comparator will pull the status pin 6 low and will enable the charge of the pin 8 capacitor. When the voltage at the capacitor reaches 5.5V, the C3 comparator will switch off the MOSFET by disabling the charge pump and the 110μA current source. The MOSFET gate will be discharged only by the 10μA current source. The MOSFET is latched off and can be turned back on again by switching input pin 7 to 0 and back to 1.

When MOSFET is off, we have the same scheme.

In normal condition the load should pull the source voltage to Gnd, thus C2 comparator output is high and status pin pulled low. If the load is shorted to V_{bat} for instance, source pin will be higher that pin 2, C2 output comparator is low and status pin is high. This is summarized in the following table :

Table 1 • Status Functionality

Input	Condition	Source Load Voltage	C1 Output Comp	Fault Pin6	Timer Pin8
Low	Normal	< Vpin2	High	Low	Low
Low	Short circuit to V_{bat}	> Vpin 2	Low	High	Charge by 10μA source
High	Normal	> Vpin 2	Low	High	Low
High	Short to Gnd or Over load	< Vpin2	High	Low	Charge by 10μA source

Operation With Inductive Loads

The device can drive MOSFET in inductive loads switching applications. In this case, a 1kΩ resistor should be connected between source of the MOSFET and device pin 1. The resistor will limit the current flowing into pin 1 and prevent MC33198D from damage during switching off of the inductive load. The gate voltage is internally clamped at - Vbe (0.6V typical), then the Vds is limited to Vbat + Vbe + Vgson to prevent excessive power dissipation in the MOSFET. The load voltage is limited to Vbe + Vgson and allows reasonable discharge current.

Switching On

The switching on of the MOSFET is ensured by the internal charge pump. The charge pump response time versus the MOSFET gate capacitance is shown in table Dynamic Electrical Characteristics table .

Switching Off

Here two cases have to be discussed ; the normal switching off of the MOSFET and the switching off under fault condition. The normal switching off is done by internal pull down current sources. The value is 110μA and is in fact composed of two current sources in parallel ; a 100μA and a 10μA source. The 10μA current is always connected to the gate pin 4 as shown in device block diagram.

The 100μA source can be disabled. This is the case when the MOSFET is switched off under fault conditions. The device will disable the 100μA current source and the MOSFET gate will be discharged only by a 10μA current. The time required to switch off the MOSFET will be much longer in this case and will result in a lower over-voltage at the MOSFET, especially when the device drives high inductive loads.

Off State Operation without V_{cc} Connection

When pin 7 is in low state the MOSFET is off. If V_{bat} is present, the gate voltage is discharged by the 110μA current source. In the case of Vbat disconnection, a self sustaining 5μA pull down current source is incorporated in the device to ensure that the MOSFET gate capacitor is discharged and tied below 0.9V. In case of Vcc disconnection, input pin 7 has no effect on gate voltage which is maintained below 0.9V and in this case, status pin is high. Low leakage current at pin 2 (10μA max) allows operation with MOSFET and MC33198D pin 2 permanently connected to battery. Vcc and other functions can be switched off from the main battery line. See figure 15.

PWM Operation

Since the MC33198D charge pump can deliver a high current, the MOSFET gate can be charged fast enough to allow PWM operations. The maximum PWM frequency is dependent on the MOSFET itself and mainly its gate to source capacitor value. Depending on the PWM frequency, the switching off time can be long, compared to the on-switching time response. This is due to the 110μA gate discharge current. To improve this parameter, a resistor can be added in parallel with the gate of the MOSFET. See figures 13 and 14 below.

Figure 13.

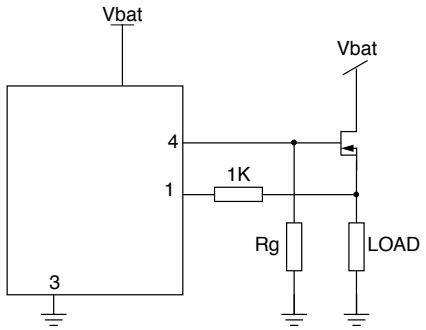

Figure 14.

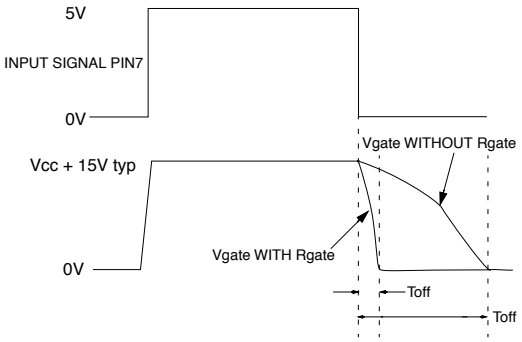

This resistor will reduce in some way the charge pump output voltage available for the MOSFET, but the device will still provide enough Gate-to-Source voltage to maintain the MOSFET on in good conditions. The resistor will mainly act as an additional discharge current, which will reduce the switching off time of the overall application. See the table 2 below and figure 11 which show the pin 4 voltage depending on the additional gate resistor and the off switching time due to this resistor.

If a very low switching time is needed, the resistor has to be extremely low, resulting in low gate voltage not high enough to ensure proper MOSFET operation. In this case, a logic level MOSFET can be used. Logic level will operate with Vgs of 5V with the same performance as a standard MOSFET having a 12V Vgs. Care should be taken regarding maximum gate to source voltage of a logic level MOSFET. An additional zener might be necessary to prevent gate oxyde damages.

Table 2 • Switching Off Characteristics with MOSFET Additional Gate Resistor

Rgate	VCC (V)	Vgate (V)	Toff
No R	7	16	450
	10	23	700
	14	28	750
	20	34	780
68 kΩ	7	14	160
	10	22	230
	14	27	230
	20	33	220
39 kΩ	7	13	100
	10	21	160
	14	26	160
	20	32	150
15 kΩ	7	11	30
	10	17,5	50
	14	24	50
	20	28,5	50

NOTE 1 : Time from negative edge of input signal (Pin 7) to negative edge of gate voltage (Pin 4) measured at 5V threshold.

NOTE 2 : Gate discharge time, not LOAD switching OFF time.

NOTE 3 : TMOS used is Motorola MTP50N06, load 10Ω resistor.

Reverse Battery

The device does not sustain reverse battery operation for Vcc voltage greater than - 0,6V in magnitude. In application, pin 5 should be protected from reverse battery by connecting a diode in series with the V_{bat} line.

Figure 15.

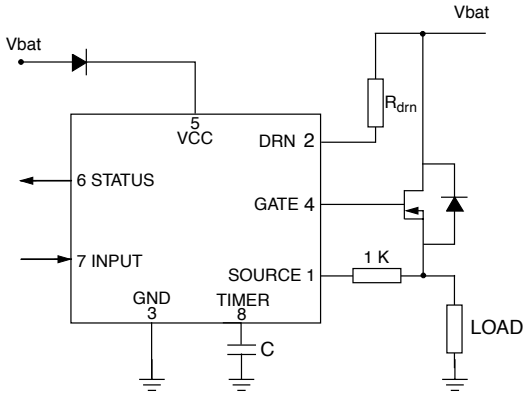

Pin 2 which is normally connected to resistor, can sustain reverse battery operation, providing that the DRN resistor is higher than 3,3K. A 1K resistor at pin 1 is also necessary to limit the reverse current flowing through the MOSFET body diode.

Figure 16. MC33198 Gnd Disconnection Circuitry

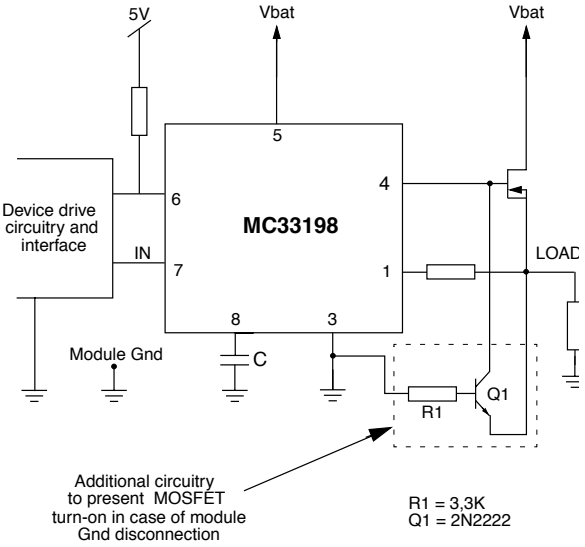

Operation

When module Gnd is disconnected and if VBAT connection is still present, pin 3 of MC33198 goes to about 2/3 of V_{bat} if additional circuitry is not inserted.

With R1/Q1, Gate/Source voltage of MOSFET is shorted as soon as pin 3 voltage rises above Gnd level.

MC33091A AND MC33198 COMPARISON

Introduction

The MC33091A and MC33198D are Motorola integrated circuits designed to control power MOSFET devices in high side switching applications. A brief comparison of both devices is presented to help the user select the right device for the application. For a detailed description of the MC33091A, please refer to the MC33091A data sheet.

General Comparison

Both devices are pin-to-pin compatible. The MC33091A has a stand-by mode activated when ever the Input (pin 7) is in the low state.

In this case, the supply current is less than 300μA over 7.0V ≤VCC≤ 24V and - 40°C ≤ Ambient Temperature≤ 125°C. The MC33198D does not have as low a stand-by supply current feature. It's circuitry is always powered up, causing the device to have a higher stand-by current but capable of faster switching making it more suitable for applications requiring higher Pulse-Width-Modulation frequencies.

In addition, the MC33198D can sense and report the output load voltage status in both Input states. This feature can be used to monitor the load when the MOSFET is off; for example, when checking for a short to Supply.

MOSFET Protection Features

In case of a MOSFET over current condition, the MC33091A detects the fault and rapidly turns-off the MOSFET, thus protecting the external MOSFET and it's load. The MC33091A automatically attempts to re-energize the MOSFET so long as the over current condition exists. The faulted condition duty cycle is determined by the external components of the MC33091A and over current conditions.

The MC33091A monitors the Drain-to-Source voltage developed across the MOSFET ; the developed voltage produces a squared current out of pin 8 proportional to the voltage. The squared current best images the power dissipation of the MOSFET and gives a most accurately tracks the power dissipation. The produced squared current determines the charge present on a parallel resistor capacitor network. The capacitor voltage is monitored and compared to internal thresholds to cause turn-off and allow turn-on of the MOSFET. A shorted load condition will produce a large Drain-to-Source voltage to be developed across the MOSFET, causing a large pin 8 current to be produced causing the resistor capacitor network voltage to rise to the a high value exceeding the threshold level, causing MC33091A to rapidly turn-off the external MOSFET and thus protect the MOSFET from catastrophic failure.

The MC33198D feature differs in that the Drain-to-Source voltage developed across the MOSFET is compared to the voltage present at pin 2. The voltage at pin 2 is created by the internal reference current and the resistor connected to pin 2 in sensing the Drain voltage. If the Drain-to-Source voltage is higher than pin 2 voltage, the device will charge the timing capacitor connected to pin 8 until the capacitor reaches the internal threshold, then latched off the MOSFET. The MC33198D will set the fault and keep the MOSFET latched-off until the input is switched low (off) and turned back on again.

Fault Status

Both devices report the fault status to the microcontroller via pin 6. The MC33091A fault pin is not valid when pin 7 is in low state, while the MC33198D fault status is valid in both low and high states of pin 7.

Power Supply

Both devices are powered from the battery line. Both devices have an overvoltage shutdown greater than 20V.

The MC33198D incorporates an undervoltage shutdown feature which switches off the MOSFET for battery voltages less than 7V.

Motorola reserves the right to make changes without further notice to any products herein. Motorola makes no warranty, representation or guarantee regarding the suitability of its products for any particular purpose, nor does Motorola assume any liability arising out of the application or use of any product or circuit, and specifically disclaims any and all liability, including without limitation consequential or incidental damages. "Typical" parameters which may be provided in Motorola data sheets and/or specifications can and do vary in different applications and actual performance may vary over time. All operating parameters, including "Typicals" must be validated for each customer application by customer's technical experts. Motorola does not convey any license under its patent rights nor the rights of others. Motorola products are not designed, intended, or authorized for use as components in systems intended for surgical implant into the body, or other applications intended to support or sustain life, or for any other application in which the failure of the Motorola product could create a situation where personal injury or death may occur. Should Buyer purchase or use Motorola products for any such unintended or unauthorized application, Buyer shall indemnify and hold Motorola and its officers, employees, subsidiaries, affiliates, and distributors harmless against all claims, costs, damages, and expenses, and reasonable attorney fees arising out of, directly or indirectly, any claim of personal injury or death associated with such unintended or unauthorized use, even if such claim alleges that Motorola was negligent regarding the design or manufacture of the part. Motorola and Ⓜ are registered trademarks of Motorola, Inc. Motorola, Inc. is an Equal Opportunity/Affirmative Action Employer.