查询2SC3101供应商 捷多邦，专业PCB打样工厂，24小时加急出货

MITSUBISHI RF POWER TRANSISTOR

2SC3101

NPN EPITAXIAL PLANAR TYPE

DESCRIPTION

2SC3101 is a silicon NPN epitaxial planar type transistor specifically designed for UHF power amplifiers applications.

FEATURES

- High power gain: $G_{pe} \geqq 5.7$dB @V_{CC} = 12.5V, f = 520MHz, P_{in} = 0.8W
- Emitter ballasted construction
- High ruggedness: Ability to withstand more than 20:1 load VSWR when operated at @V_{CC} = 15.2V, f = 520MHz, P_O = 3W.

APPLICATION

For drive stage and output stage of power amplifiers in UHF band.

OUTLINE DRAWING

Dimensions in mm

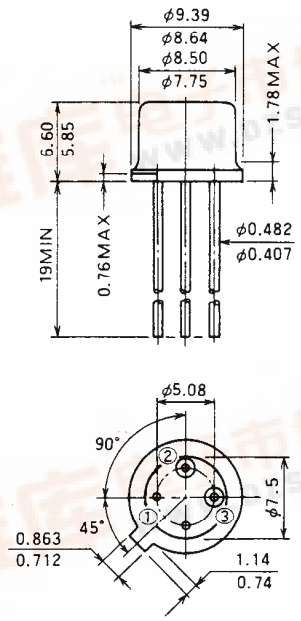

PIN :
① EMITTER (CASE)
② BASE
③ COLLECTOR

T-8E

ABSOLUTE MAXIMUM RATINGS (T_C = 25°C unless otherwise specified)

Symbol	Parameter	Conditions	Ratings	Unit
V_{CEO}	Collector to base voltage		35	V
V_{EBO}	Emitter to base voltage		4	V
V_{CEO}	Collector to emitter voltage	$R_{BE} = \infty$	17	V
I_C	Collector current		1	A
P_C	Collector dissipation	T_C = 25°C	10	W
T_j	Junction temperature		175	°C
T_{stg}	Storage temperature		−55 to 175	°C

Note. Above parameters are guaranteed independently.

ELECTRICAL CHARACTERISTICS (T_C = 25°C unless otherwise specified)

Symbol	Parameter	Test conditions	Limits			Unit
			Min	Typ	Max	
$V_{(BR)EBO}$	Emitter to base breakdown voltage	I_E = 1mA, I_C = 0	4			V
$V_{(BR)CBO}$	Collector to base breakdown voltage	I_C = 10mA, I_E = 0	35			V
$V_{(BR)CEO}$	Collector to emitter breakdown voltage	I_C = 10mA, $R_{BE} = \infty$	17			V
I_{CBO}	Collector cutoff current	V_{CB} = 15V, I_E = 0			300	μA
I_{EBO}	Emitter cutoff current	V_{EB} = 2V, I_C = 0			300	μA
h_{FE}	DC forward current gain *	V_{CB} = 10V, I_C = 0.1A	10	50	180	—
P_O	Output power	V_{CC} = 12.5V, P_{in} = 0.8W, f = 520MHz,	3	3.5		W
η_C	Collector efficiency		50	60		%

Note. *Pulse test, P_W = 150μs, duty = 5%.
Above parameters, ratings, limits and conditions are subject to change.

找PDF 维库一下 pdf.dzsc.com

TEST CIRCUIT

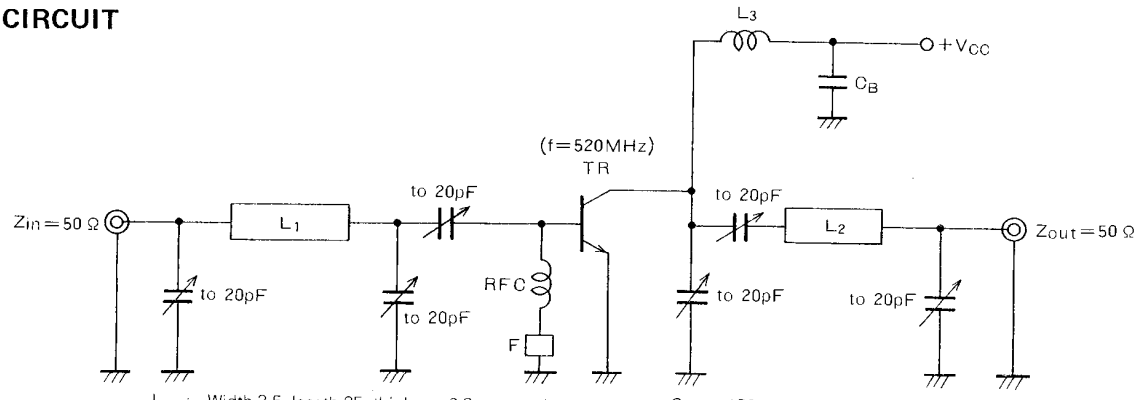

L_1 : Width 3.5, length 25, thinkness 0.3 cupper plate
L_2 : Width 3.5, length 17, thinkness 0.3 cupper plate
L_3 : 50, 2T, 1P, ϕ0.8 enameled wire
RFC : j0, 5D, 6T, 0.5P ϕ0.8 enameled wire

C_8 : 150pF, 1500pF, 3.3μF in parallel
F : Ferrite bead
(Note) D: Inner diameter T: Turn numbers of coil
P : Pitch of coil Dimensions: mm

TYPICAL PERFORMANCE DATA

COLLECTOR DISSIPATION VS. AMBIENT TEMPERATURE CHARACTERISTICS

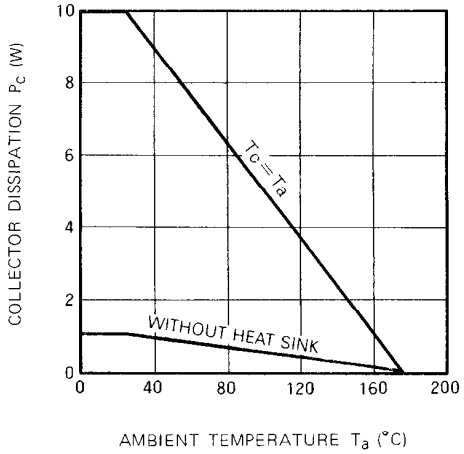

OUTPUT POWER, COLLECTOR EFFICIENCY VS. INPUT POWER CHARACTERISTICS

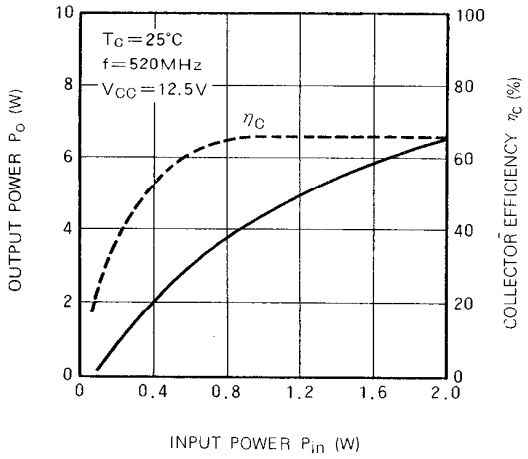

OUTPUT POWER VS. COLLECTOR SUPPLY VOLTAGE CHARACTERISTICS

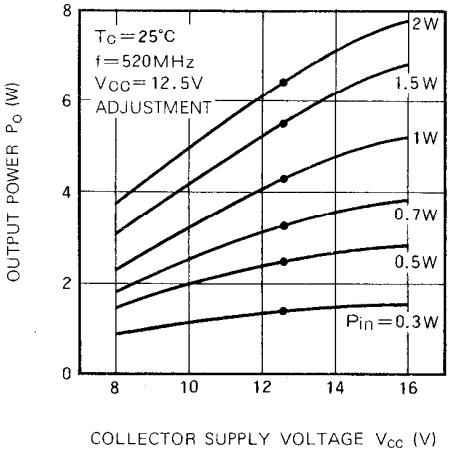
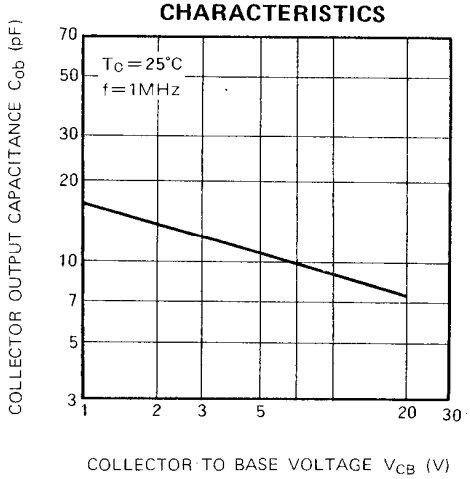
COLLECTOR OUTPUT CAPACITANCE VS. COLLECTOR TO BASE VOLTAGE CHARACTERISTICS