查询2SK2409供应商

NEC

DATA SHEET

MOS FIELD EFFECT TRANSISTOR

2SK2409

SWITCHING
N-CHANNEL POWER MOS FET
INDUSTRIAL USE

DESCRIPTION

The 2SK2409 is N-Channel MOS Field Effect Transistor designed for solenoid, motor, and lamp driver.

FEATURES

- Low On-Resistance
  $R_{DS(on)} \leq 27$ mΩ (V_{GS} = 10 V, I_D = 20 A)
  $R_{DS(on)} \leq 40$ mΩ (V_{GS} = 4 V, I_D = 20 A)
- Low C_{iss} C_{iss} = 2040 pF TYP.
- Built-in Gate Protection Diode

QUALITY GRADE

Standard

Please refer to "Quality grade on NEC Semiconductor Device" (Document number IEI-1209) published by NEC Corporation to know the specification of quality grade on the devices and its recommended applications.

ABSOLUTE MAXIMUM RATINGS (T_a = 25 ˚C)

Drain to Source Voltage	V_{DSS}	60	V
Gate to Source Voltage	V_{GSS}	±20	V
Drain Current (DC)	$I_{D(DC)}$	±40	A
Drain Current (pulse)	$I_{D(pulse)}$*	±160	A
Total Power Dissipation (T_a = 25 ˚C)	P_{T1}	2.0	W
Total Power Dissipation (T_c = 25 ˚C)	P_{T2}	35	W
Channel Temperature	T_{ch}	150	˚C
Storage Temperature	T_{stg}	–55 to +150	˚C
Single Avalanche Current	I_{AS}**	40	A
Single Avalanche Energy	E_{AS}**	160	mJ

* PW ≤ 10 μs, Duty Cycle ≤ 1 %

** Starting T_{ch} = 25 ˚C, R_G = 25 Ω, V_{GS} = 20 V → 0

PACKAGE DIMENSION
(in millimeters)

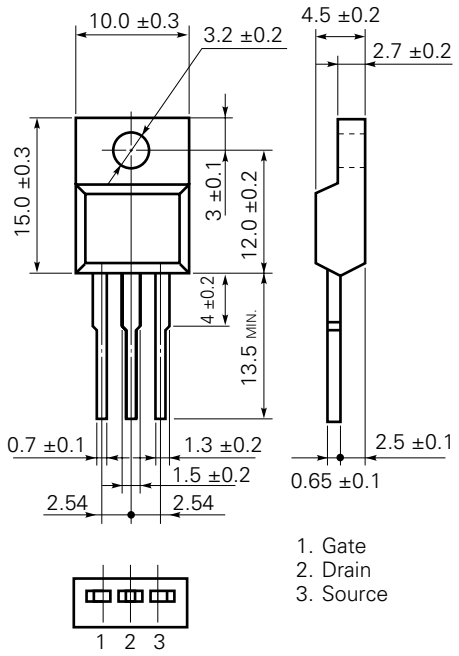

MP-45F (ISOLATED TO-220)

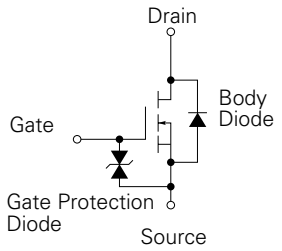

The information in this document is subject to change without notice.

Document No. TC-2489
(O. D. No. TC-8028)
Date Published September 1994 P
Printed in Japan

© NEC Corporation 1994

ELECTRICAL CHARACTERISTICS (T_a = 25 ˚C)

CHARACTERISTIC	SYMBOL	MIN.	TYP.	MAX.	UNIT	TEST CONDITIONS
Drain to Source On-State Resistance	$R_{DS(on)1}$		22	27	mΩ	V_{GS} = 10 V, I_D = 20 A
Drain to Source On-State Resistance	$R_{DS(on)2}$		30	40	mΩ	V_{GS} = 4 V, I_D = 20 A
Gate to Source Cutoff Voltage	$V_{GS(off)}$	1.0	1.5	2.0	V	V_{DS} = 10 V, I_D = 1 mA
Forward Transfer Admittance	$\lvert y_{fs} \rvert$	20	35		S	V_{DS} = 10 V, I_D = 20 A
Drain Cutoff Current	I_{DSS}			10	μA	V_{DS} = 60 V, V_{GS} = 0
Gate to Source Leakage Current	I_{GSS}			±10	μA	V_{GS} = ±20 V, V_{DS} = 0
Input Capacitance	C_{iss}		2040		pF	V_{DS} = 10 V
Output Capacitance	C_{oss}		1080		pF	V_{GS} = 0
Reverse Transfer Capacitance	C_{rss}		300		pF	f = 1 MHz
Turn-On Delay Time	$t_{d(on)}$		30		ns	I_D = 20 A
Rise Time	t_r		350		ns	$V_{GS(on)}$ = 10 V
Turn-Off Delay Time	$t_{d(off)}$		210		ns	V_{DD} = 30 V
Fall Time	t_f		260		ns	R_G = 10 Ω
Total Gate Charge	Q_G		72		nC	I_D = 40 A
Gate to Source Charge	Q_{GS}		6.0		nC	V_{DD} = 48 V
Gate to Drain Charge	Q_{GD}		24		nC	V_{GS} = 10 V
Body Diode Forward Voltage	$V_{F(S-D)}$		1.1		V	I_F = 40 A, V_{GS} = 0
Reverse Recovery Time	t_{rr}		110		ns	I_F = 40 A, V_{GS} = 0
Reverse Recovery Charge	Q_{rr}		360		nC	di/dt = 100 A/μs

Test Circuit 1 Avalanche Capability

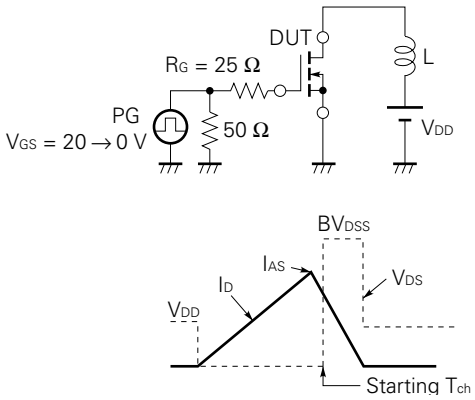

Test Circuit 2 Switching Time

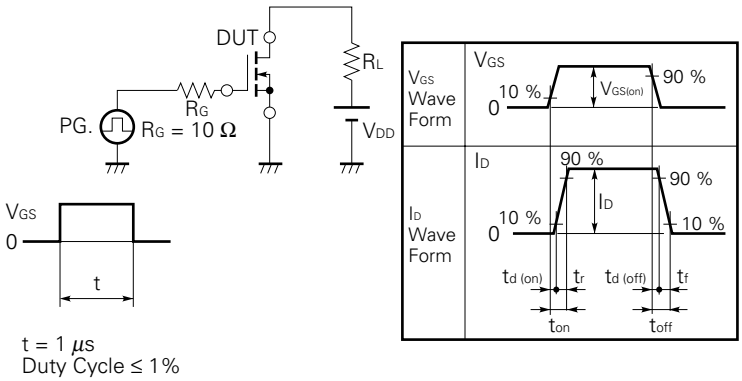

Test Circuit 3 Gate Charge

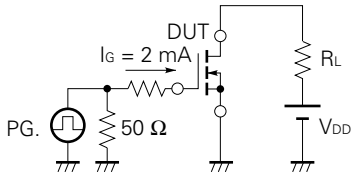

TYPICAL CHARACTERISTICS (T_a = 25 ˚C)

DERATING FACTOR OF FORWARD BIAS SAFE OPERATING AREA

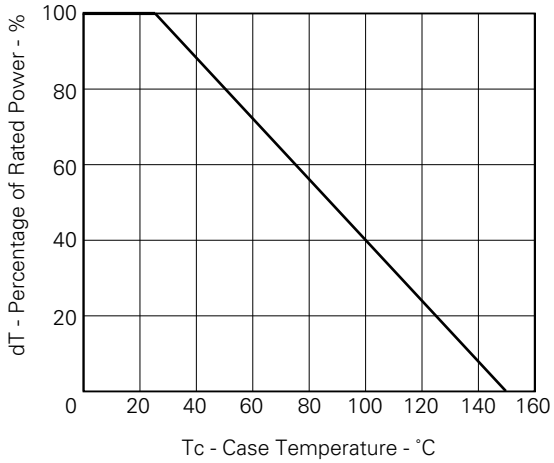

TOTAL POWER DISSIPATION vs. CASE TEMPERATURE

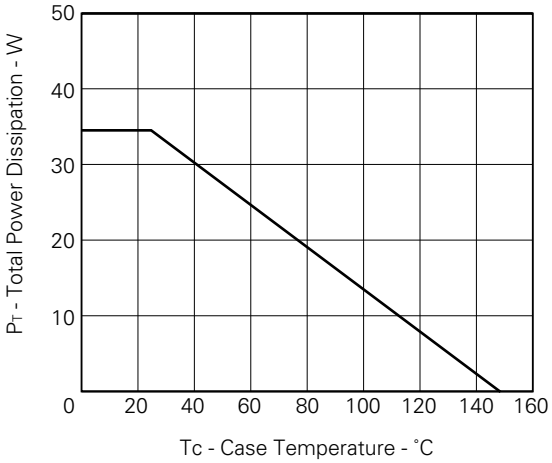

FORWARD BIAS SAFE OPERATING AREA

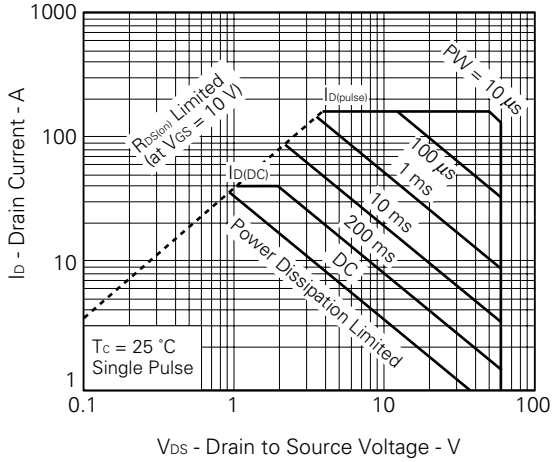

DRAIN CURRENT vs. DRAIN TO SOURCE VOLTAGE

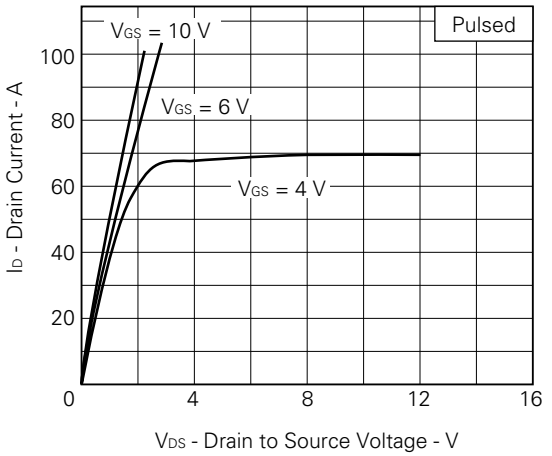

FORWARD TRANSFER CHARACTERISTICS

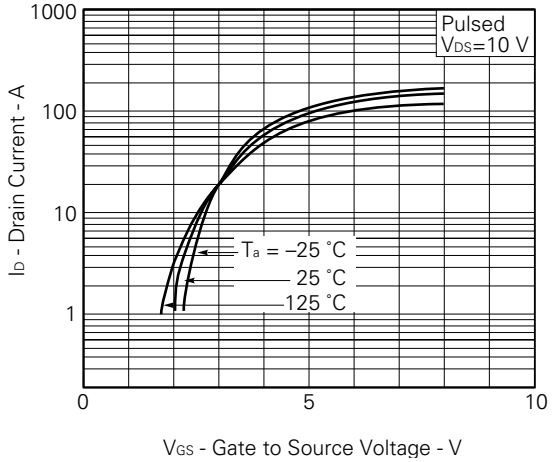

TRANSIENT THERMAL RESISTANCE vs. PULSE WIDTH

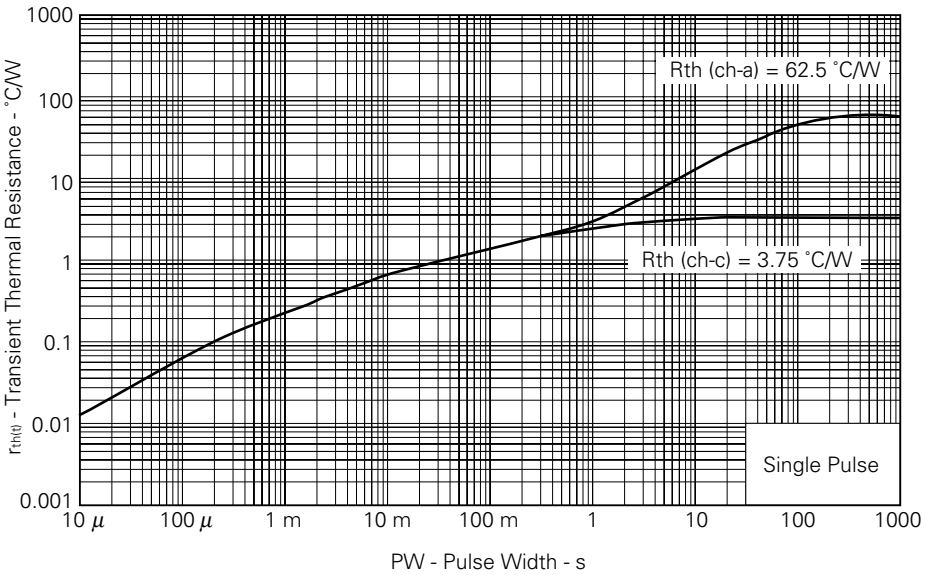

FORWARD TRANSFER ADMITTANCE vs. DRAIN CURRENT

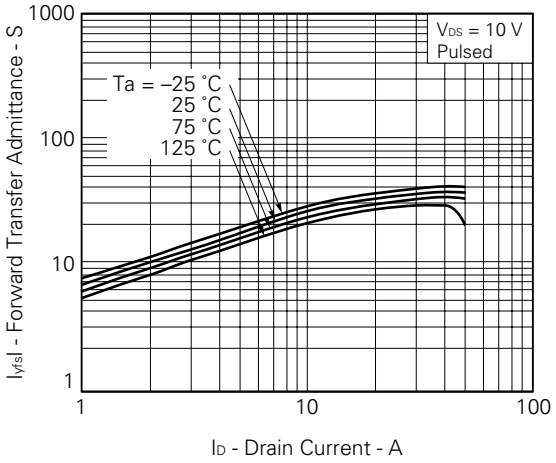

DRAIN TO SOURCE ON-STATE RESISTANCE vs. GATE TO SOURCE VOLTAGE

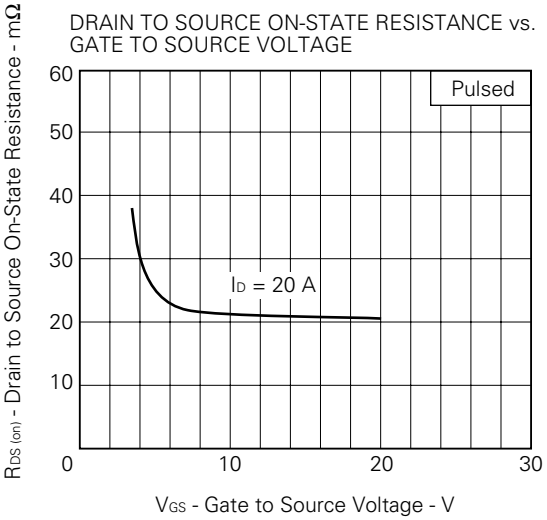

DRAIN TO SOURCE ON-STATE RESISTANCE vs. DRAIN CURRENT

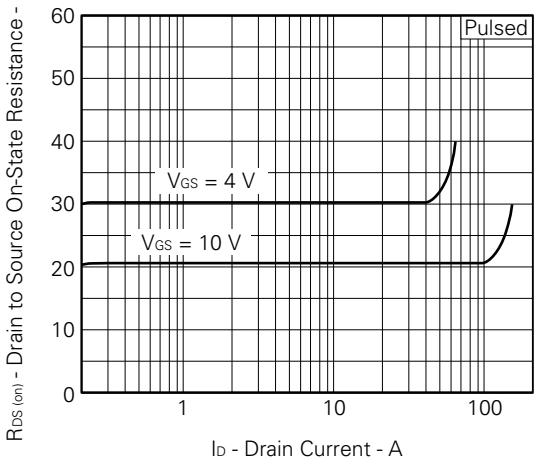

GATE TO SOURCE CUTOFF VOLTAGE vs. CHANNEL TEMPERATURE

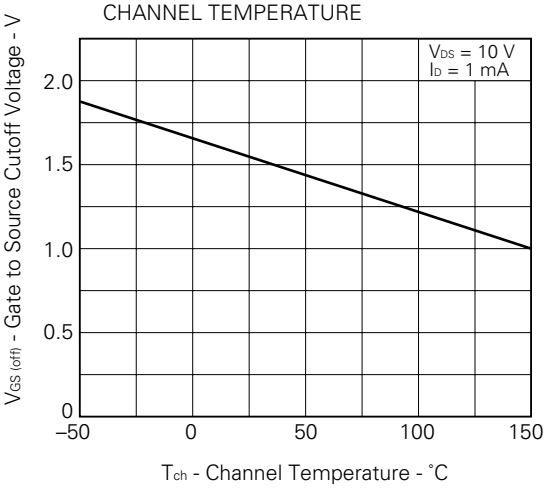

DRAIN TO SOURCE ON-STATE RESISTANCE vs. CHANNEL TEMPERATURE

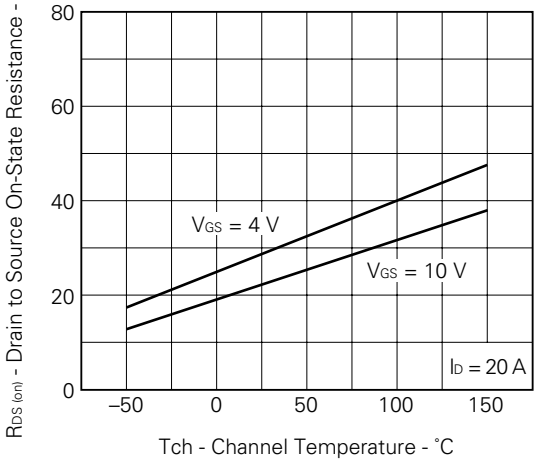

SOURCE TO DRAIN DIODE FORWARD VOLTAGE

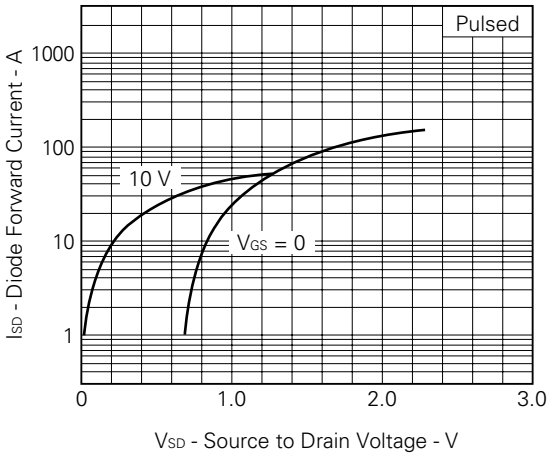

CAPACITANCE vs. DRAIN TO SOURCE VOLTAGE

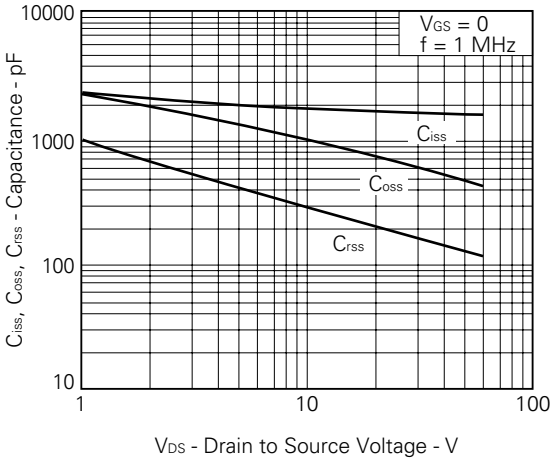

SWITCHING CHARACTERISTICS

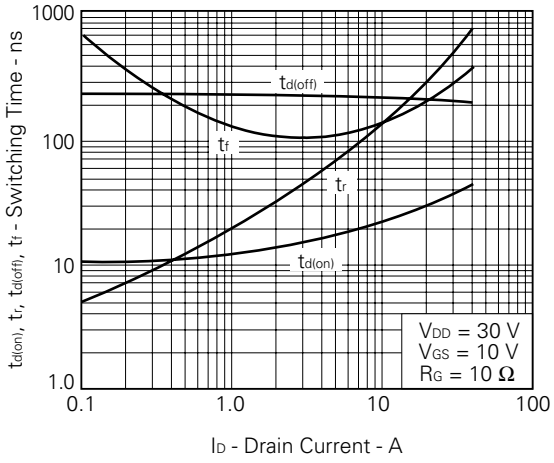

REVERSE RECOVERY TIME vs. DRAIN CURRENT

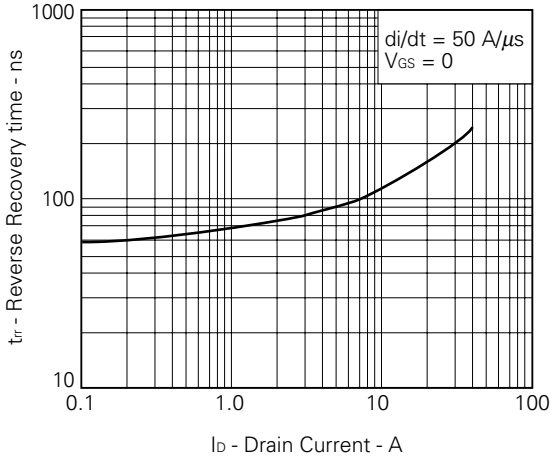

DYNAMIC INPUT/OUTPUT CHARACTERISTICS

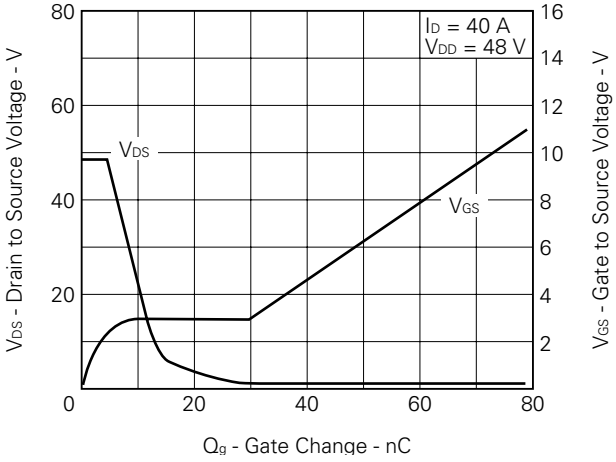

SINGLE AVALANCHE ENERGY vs.
INDUCTIVE LOAD

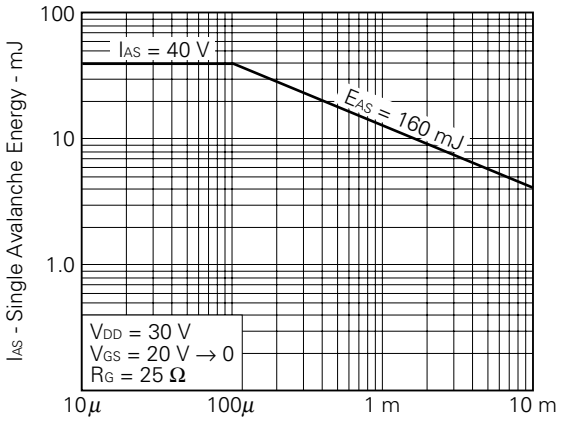

SINGLE AVALANCHE ENERGY
DERATING FACTOR

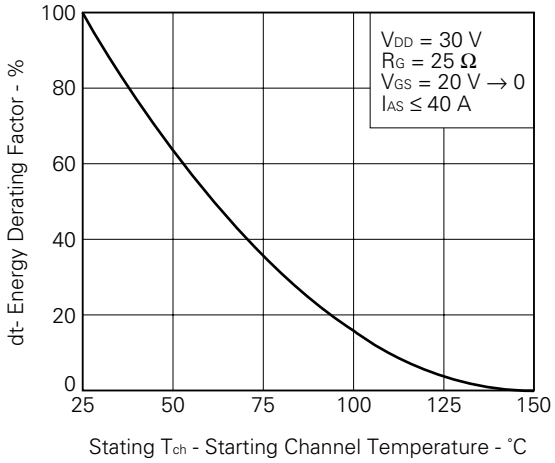

REFERENCE

Document Name	Document No.
NEC semiconductor device reliability/quality control system.	TEI-1202
Quality grade on NEC semiconductor devices.	IEI-1209
Semiconductor device mounting technology manual.	IEI-1207
Semiconductor device package manual.	IEI-1213
Guide to quality assurance for semiconductor devices.	MEI-1202
Semiconductor selection guide.	MF-1134
Power MOS FET features and application switching power supply.	TEA-1034
Application circuits using Power MOS FET.	TEA-1035
Safe operating area of Power MOS FET.	TEA-1037

[MEMO]

No part of this document may be copied or reproduced in any form or by any means without the prior written consent of NEC Corporation. NEC Corporation assumes no responsibility for any errors which may appear in this document.
NEC Corporation does not assume any liability for infringement of patents, copyrights or other intellectual property rights of third parties by or arising from use of a device described herein or any other liability arising from use of such device. No license, either express, implied or otherwise, is granted under any patents, copyrights or other intellectual property rights of NEC Corporation or others.
The devices listed in this document are not suitable for use in aerospace equipment, submarine cables, nuclear reactor control systems and life support systems. If customers intend to use NEC devices for above applications or they intend to use "Standard" quality grade NEC devices for applications not intended by NEC, please contact our sales people in advance.
Application examples recommended by NEC Corporation
Standard: Computer, Office equipment, Communication equipment, Test and Measurement equipment, Machine tools, Industrial robots, Audio and Visual equipment, Other consumer products, etc.
Special: Automotive and Transportation equipment, Traffic control systems, Antidisaster systems, Anticrime systems, etc.

M4 92.6