查询TUA4310X供应商 捷多邦，专业PCB打样工厂，24小时加急出货

SIEMENS

FM-Tuner

TUA 4310X
TUA 4310XS

Preliminary Data **Bipolar IC**

Features

- Double-balanced mixer
- High RF-input impedance
- Sym. and unsym. operation
- AGC-generation for PIN-Diodes and MOSFET's
- Strictly symmetrical RF-parts
- Decoupled counter output
- High supply voltage ripple rejection
- 2-pin oscillator
- First IF-amplifier adjustable gain
- Second IF-amplifier adjustable temperature coefficient

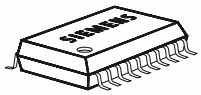

P-DSO-20-1

P-SSOP-20-1

Type	Ordering Code	Package
TUA 4310X	Q67006-A5054	P-DSO-20-1 Tape and Reel
TUA 4310XS	Q67006-A5203	P-SSOP-20-1 Tape and Reel

Circuit Description

The TUA 4310X has been designed as integrated tuner with strictly symmetrical RF-parts for use in car radios. In addition the IC provides a prestage control and an IF post amplification.

The IC is especially suitable for use in car radios with prestage control and distributed IF-selection.

The integrated circuit includes an 2-pin oscillator with symmetrical input, buffered output and a double balanced mixer for frequency conversion. The RF-input stage allows symmetrical and unsymmetrical operation. The resulting IF is amplified in a first linear IF-driver with adjustable gain and in a second IF-driver with an adjustable temperature coefficient. Between these drivers an additional IF-selection is recommended. The AGC-stage integrated for prestage control can drive PIN-Diodes as well as MOSFET's. The IC also includes a reference voltage source with high supply voltage ripple rejection.

找PDF 上pdf.dzsc.com

Pin Function

Pin No.	Function
1	RF-input for mixer
2	RF-input for mixer
3	AGC-threshold
4	Ground
5	Reference voltage
6	Oscillator
7	Oscillator
8	Decoupled oscillator output (counter)
9	IF-driver temperature coefficient adjust
10	IF-driver 2 output
11	IF-driver 2 input
12	IF-driver 1 gain adjust
13	IF-driver 1 output
14	IF-driver 1 decouple
15	IF-driver 1 input
16	Supply voltage
17	AGC-time constant
18	AGC-output for the prestage control
19	Mixer output
20	Mixer output

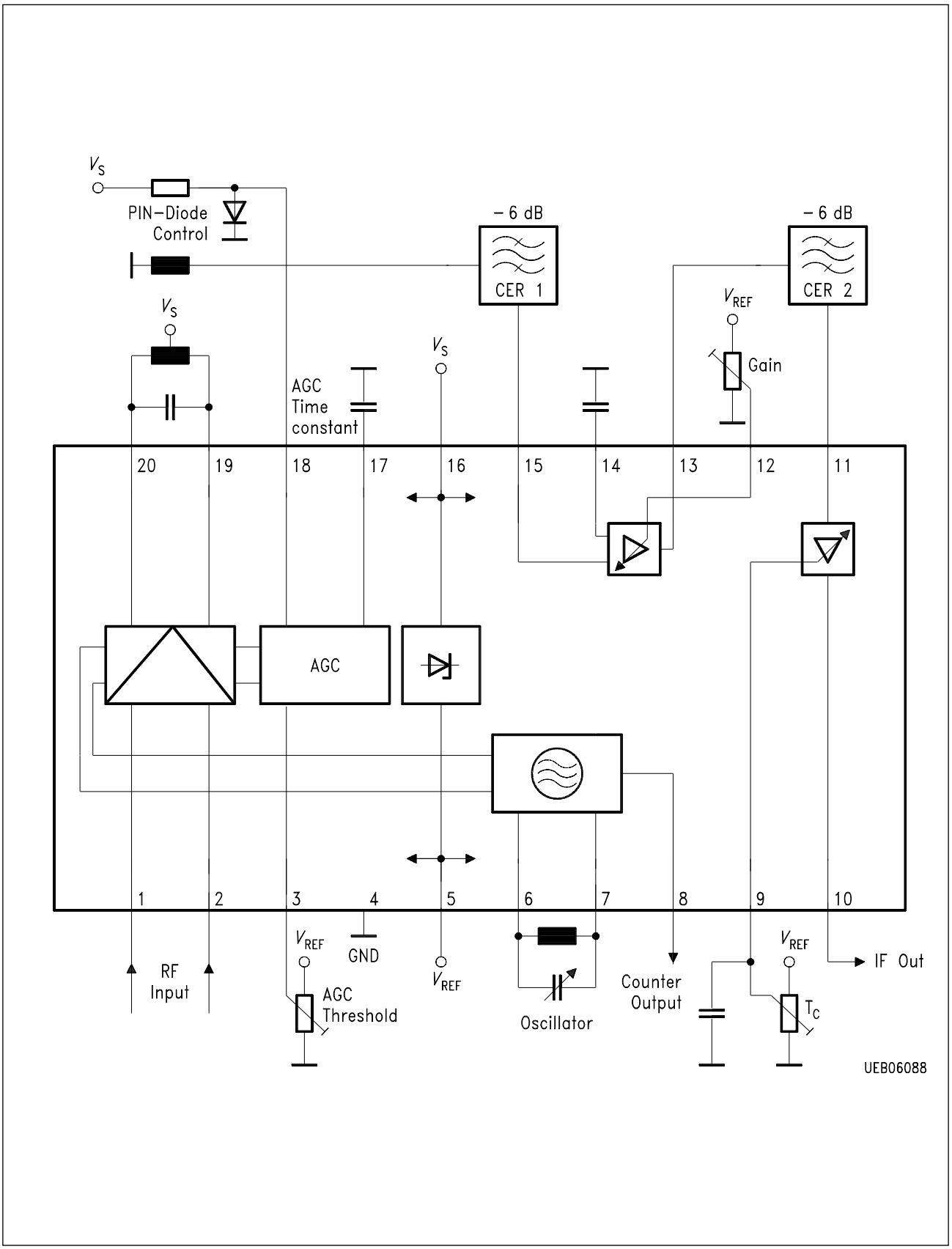

Block Diagram

Absolute Maximum Ratings
T_A = – 40 to 85 °C

Parameter	Symbol	Limit Values		Unit	Remarks
		min.	max.		
Supply voltage	V_{16}	0	13.2	V	
Mixer	V_{19}, V_{20}	0	13.2	V	
Currents: All pins are short-circuit protected against ground.					
ESD-Protection	V_{ESD}	– 4	4	kV	HBM (1.5 kΩ, 100 pF)
IF2-DC	I_9		5	mA	
Thermal resistance system-air	$R_{th\ SA}$		105	K/W	
Operating Range					
Supply voltage	V_{16}	7.5	13.2	V	
Ambient temperature	T_A	– 40	85	°C	

Absolute Maximum Ratings
T_A = – 40 to 85 °C

Parameter	Symbol	Limit Values		Unit	Test Condition
		min.	max.		
Supply voltage	V_{16}	0	42	mA	$I_{16} + I_{19} + I_{20}$; V_{12} = 1.2 V; a = 0; V_3 = 4 V
Reference voltage	V_5	4.5	5.1	V	
Total gain	G_0	21	37	dB	G_0 = 20 lg ($V_{10}/V_{1,2}$); a = 0; G_{IF1} = 15 dB; G_{IF2} = 15 dB (incl. – 12 dB CER1 + CER2)[1)]

Notes see page 5.

Absolute Maximum Ratings (cont'd)
T_A = – 40 to 85 °C

Parameter	Symbol	Limit Values		Unit	Test Condition
		min.	max.		
Mixer					
Interceptpoint third order	I_{P3}	110		dB/µV	$V_{1,2} \geq$ 100 mVrms
Noise figure	NF		10	dB	
Mixer gain	G			dB	G_{mix} = 20 lg ($V_{15}/V_{1,2}$) (incl. – 6 dB CER1)[1)]
Input impedance[2)] Input impedance[3)] Input impedance[4)] Input impedance[5)] Input impedance[6)]	R R_{sym} C_{sym} R_{asym} C_{asym}			kΩ kΩ pF kΩ pF	
Optimum generator for noise matching[7)]	X_N			Ω	
Oscillator					
Interference modulation	Δf		5	Hz	
Output signal	V_8	115		mVrms	R_L = 300 Ω
Output impedance (resistive)	R_8	270	390	Ω	
Operating frequency	f_{OSC}		160	MHz	

1) CER-filters SFE 10.7 + additional correction to – 6 dB.
2) Internal resistance between input pin and internal V_{REF}.
3) Real part of sym. input impedance.
4) Imaginary part of sym. input impedance.
5) Real part of asym. input impedance.
6) Imaginary part of asym. input impedance.
7) Optimum generator impedance for noise minimum.

AC/DC Characteristics

T_A = 25 °C; V_{16} = 10 V; f_{IF} = 10.7 MHz, f_{HF} = 100 MHz; Q_{IF} = 10 (C_{LC} = 100 pF)

Parameter	Symbol	Limit Values			Unit	Test Condition
		min.	typ.	max.		
Control Voltage Generation (see diagram 4)						
Control voltage for prestage	V_{17}	5.3	5.9	6.5	V	V_3 = 2.5 V; $V_{1,2}$ = 0 mVrms
	V_{17}	0		0.1	V	V_3 = 2.5 V; $V_{1,2}$ = 30 mVrms
Output current	I_{18}	7	10	14	mA	V_3 = 2.5 V; $V_{1,2}$ = 0 mVrms
	I_{18}	0		0.1	mA	V_3 = 2.5 V; $V_{1,2}$ = 50 mVrms
Saturation voltage	V_{18}			0.250	V	V_{17} = 6 V; $R_{16,18}$ = 1 kΩ
IF-Amplifier 1 (see diagram 2 and 5)						
Input resistance	R_{15}	270	330	390	Ω	
Input capacitance	C_{15}		5		pF	
Output resistance	R_{13}	270	330	390	Ω	
Output capacitance	C_{13}		3		pF	
Voltage gain	$G_{IF1\ min}$	2	5	8	dB	$G_u = 20 \lg \frac{\lvert V_{13}\rvert}{\lvert V_{15}\rvert}$ R_L = 330 Ω, V_{12} = 4 V
Voltage gain	$G_{IF1\ max}$	21	25	29	dB	$G_u = 20 \lg \frac{\lvert V_{13}\rvert}{\lvert V_{15}\rvert}$ R_L = 330 Ω, V_{12} = 1.2 V
Noise figure	NF_{IF1}			10	dB	R_6 = 330 Ω, V_{12} = 1.2 V

AC/DC Characteristics (cont'd)
T_A = 25 °C; V_{16} = 10 V; f_{IF} = 10.7 MHz, f_{HF} = 100 MHz; Q_{IF} = 10 (C_{LC} = 100 pF)

Parameter	Symbol	Limit Values			Unit	Test Condition
		min.	typ.	max.		
IF-Amplifier 2 (see diagram 1 and 3)						
Input resistance	R_{11}		330		Ω	
Input capacitance	C_{11}		6		pF	
Output resistance	R_{10}	270	330	390	Ω	
Output capacitance	C_{10}		3		pF	
Voltage gain	G_{IF2}	13	15	17	dB	$G_u = 20 \lg \frac{\lvert V_{10} \rvert}{\lvert V_{11} \rvert}$ $R_L = 330\ \Omega, a = 0\ T_A = 300$ K
Noise figure	NF_{IF2}		6	8	dB	$R_G = 330\ \Omega, R_L = 330\ \Omega$
Temp. coefficient range	a	0		3		$V/V_Q = (T/T_A)\ a$
Gain versus range temp. Gain versus range temp.	G/G_0 G/G_0		0.09 0		dB/K dB/K	$a = 3$ $a = 0$

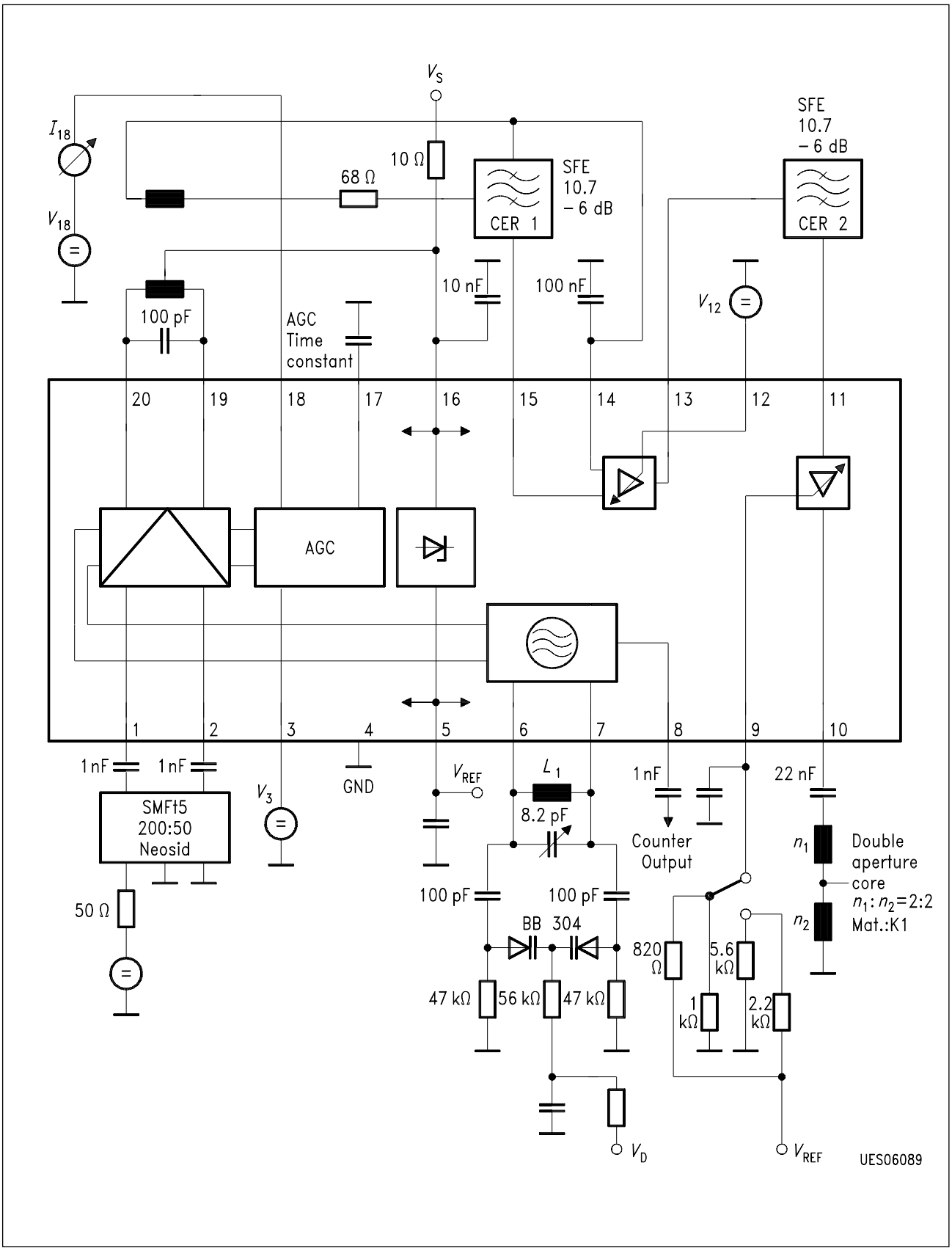

Test Circuit

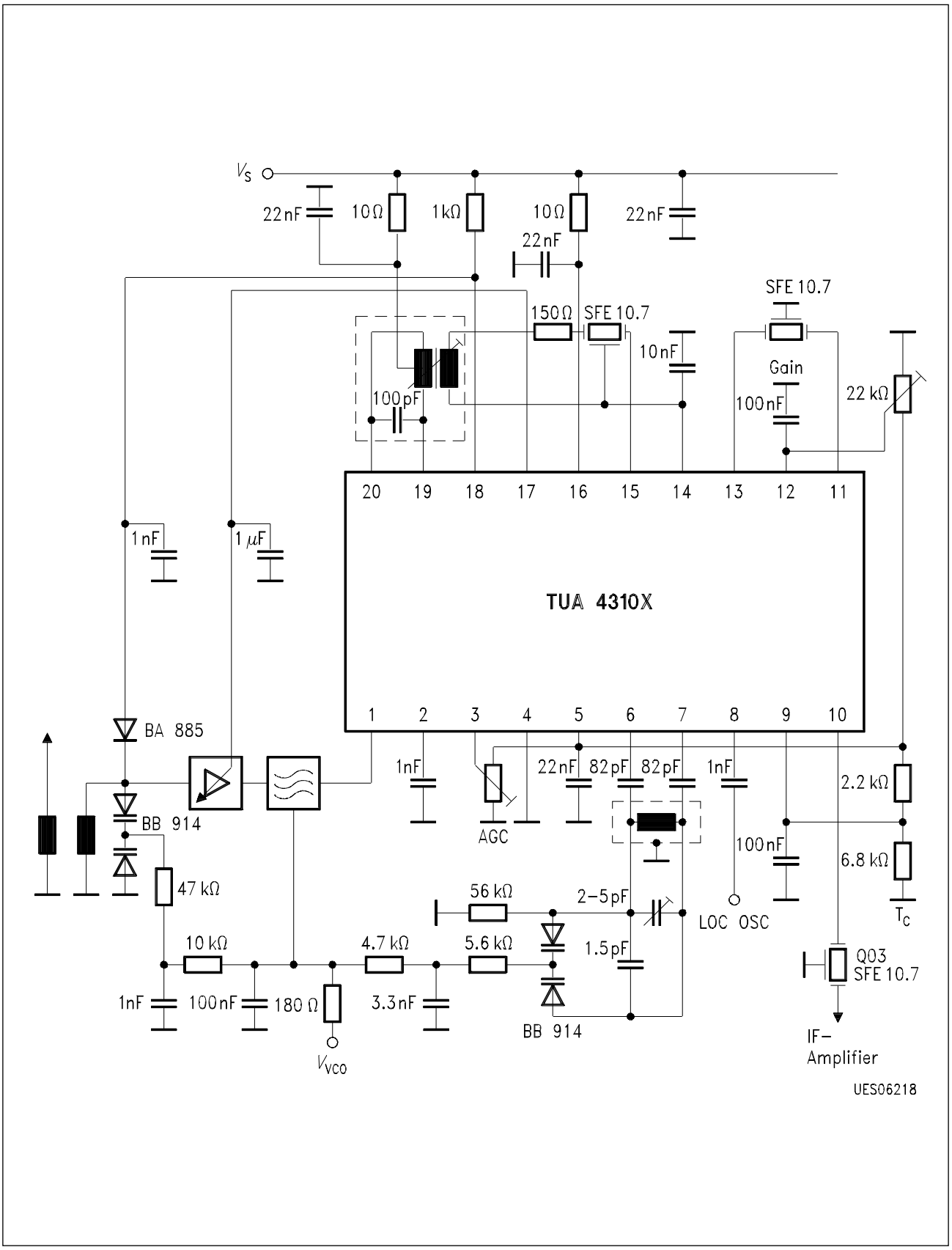

Application Circuit

Diagram 1
Computing the T_C Compensator
IF-Amplifier

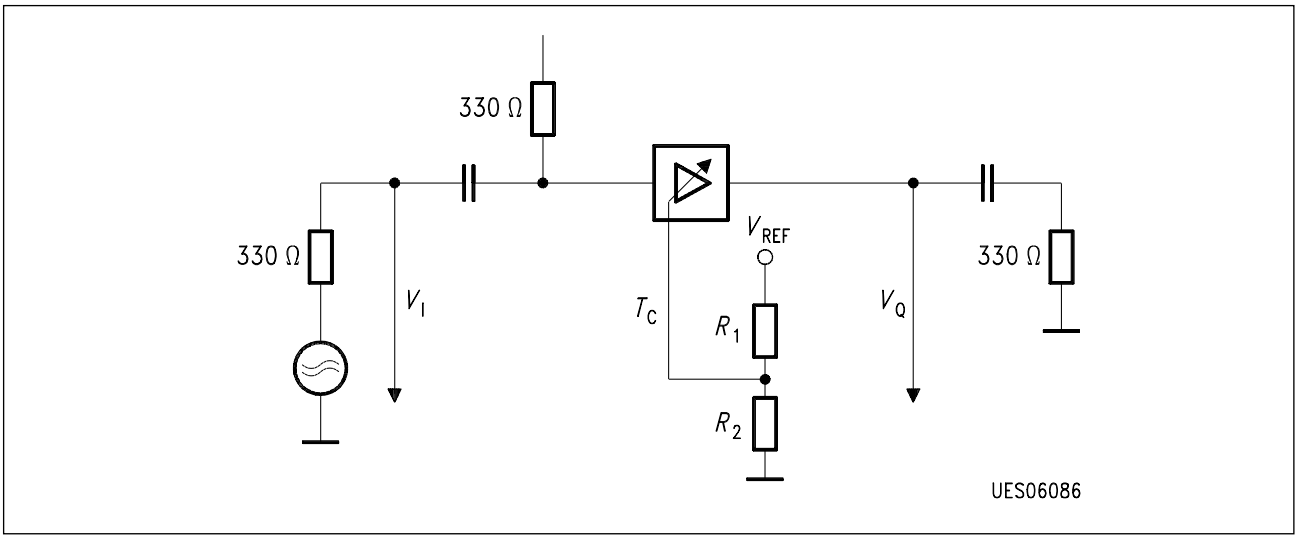

G_0: Gain (15 dB = 5.62) T_A = 300 K
α: T_C gradient (α = 0 … 3)

$$R_1 = \frac{15231}{G_0\,(1.2 + 0.8\,\alpha)} = \begin{array}{l}[2558\ \Omega \text{ for } \alpha = 0]\\ [753\ \Omega \text{ for } \alpha = 3]\end{array}$$

$$R_2 = \frac{2R_1\,(1.5 + \alpha)}{1 + 2\alpha} = \begin{array}{l}[6775\ \Omega \text{ for } \alpha = 0]\\ [968\ \Omega \text{ for } \alpha = 3]\end{array}$$

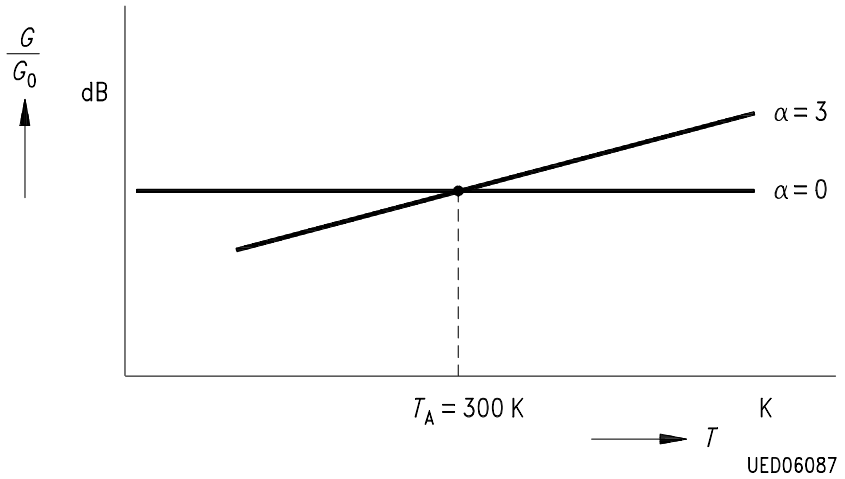

a = 0 ≙ 0 dB
a = 1.38 ≙ 0.04 dB/K
a = 2.77 ≙ 0.08 dB/K

$$\frac{G}{G_0}\,(\text{dB}) = \alpha \times 8.685 \times \frac{\Delta T}{T_A}$$

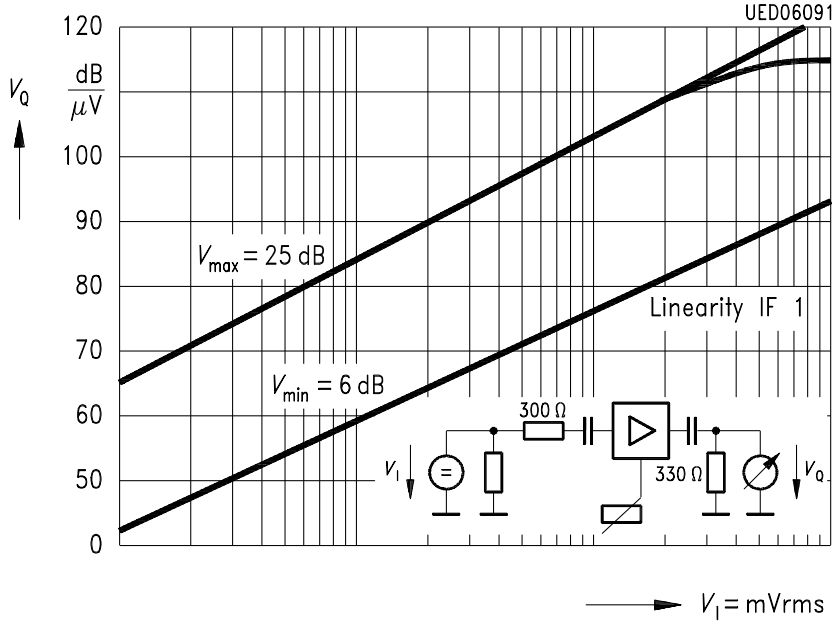

Diagram 2

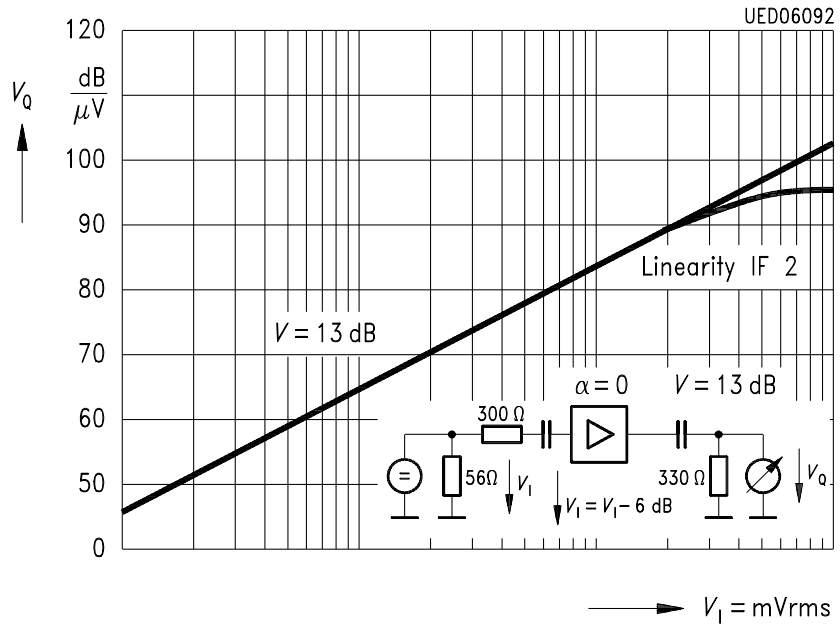

Diagram 3

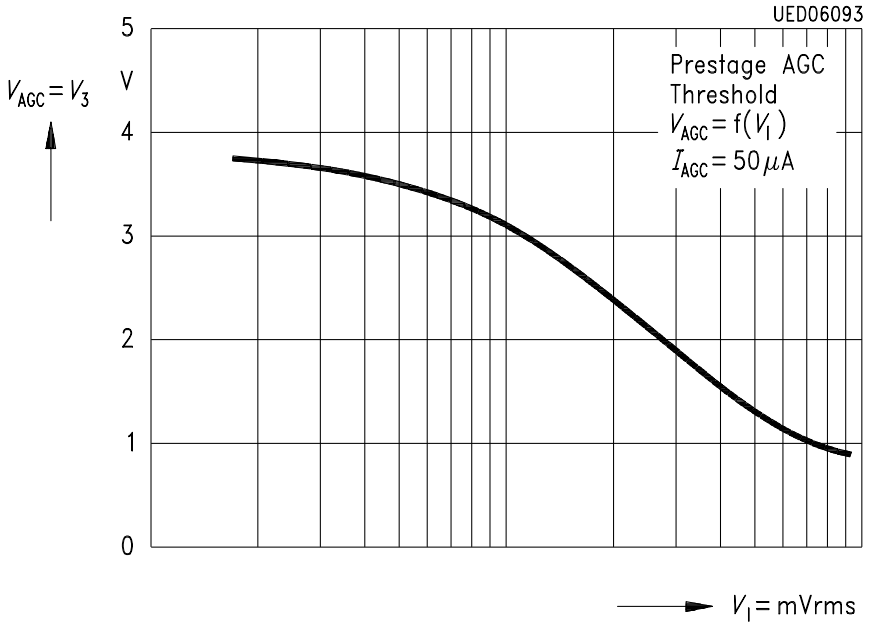

Diagram 4

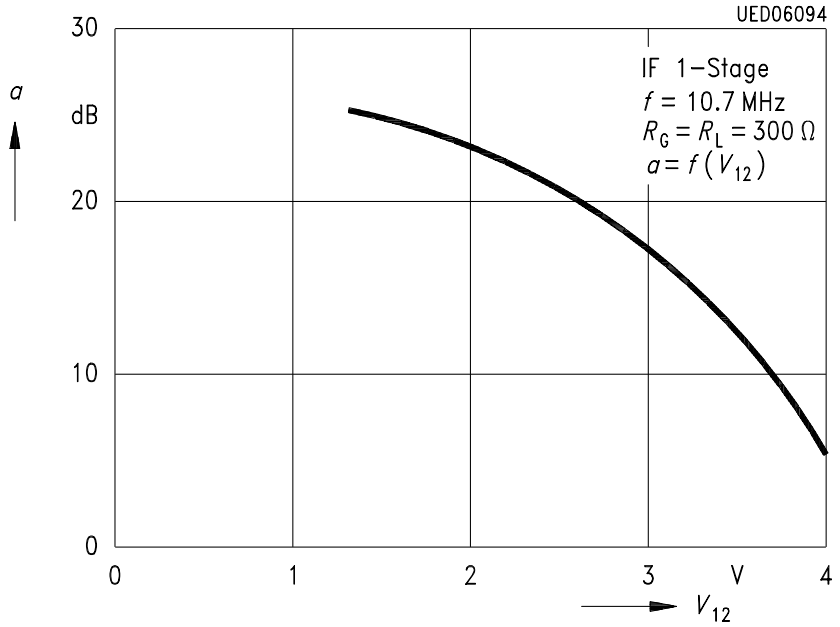

Diagram 5

Package Outlines

Plastic-Package, P-DSO-20-1 (SMD)
(Plastic Dual Small Outline Package)

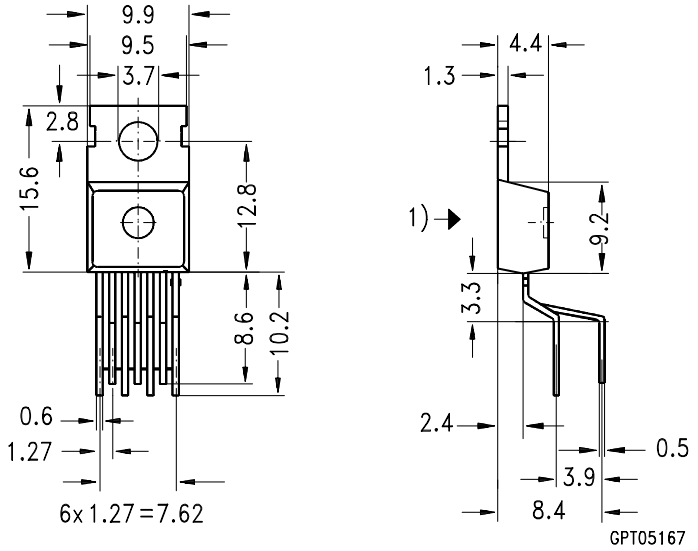

1) shear and punch direction no burrs this surface

GPT05167

Plastic-Package, P-SSOP-20-1
(Plastic Shrink Small Outline Package)

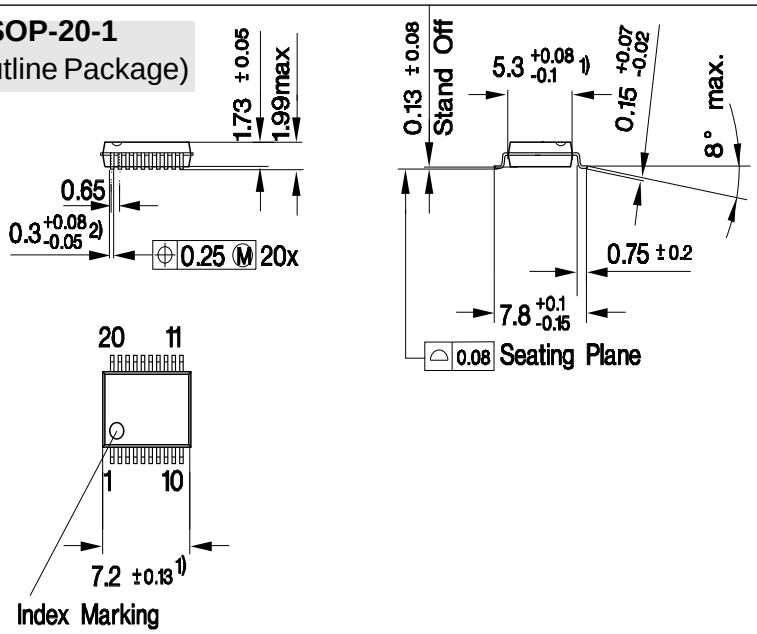

1) Does not include plastic or metal protrusion of 0.15 max. per side
2) Does not include dambar protrusion of 0.08 max. per side

GPS05387

Sorts of Packing
Package outlines for tubes, trays etc. are contained in our Data Book “Package Information”
SMD = Surface Mounted Device

Dimensions in mm