查询LM1812N 供应商 捷多邦，专业PCB打样工厂，24小时加急出货

National Semiconductor

LM1812 Ultrasonic Transceiver

General Description

The LM1812 is a general purpose ultrasonic transceiver designed for use in a variety of ranging, sensing, and communications applications. The chip contains a pulse-modulated class C transmitter, a high gain receiver, a pulse modulation detector, and noise rejection circuitry.

A single LC network defines the operating frequency for both the transmitter and receiver. The class C transmitter output drives up to 1A (12W) peak at frequencies up to 325 kHz. The externally programmed receiver gain provides a detection sensitivity of 200 μVp-p. Detection circuitry included on-chip is capable of rejecting impulse noise with external programming. The detector output sinks up to 1A.

Applications include sonar systems, non-contact ranging, and acoustical data links, in both liquid and gas ambients.

Features

- One or two-transducer operation
- Transducers interchangeable without realignment
- No external transistors
- Impulse noise rejection
- No heat sinking
- Protection circuitry included
- Detector output drives 1A peak load
- Ranges in excess of 100 feet in water, 20 feet in air
- 12W peak transmit power

Applications

- Liquid level measurement
- Sonar
- Surface profiling
- Data links
- Hydroacoustic communications
- Non-contact sensing
- Industrial process control

Typical Application

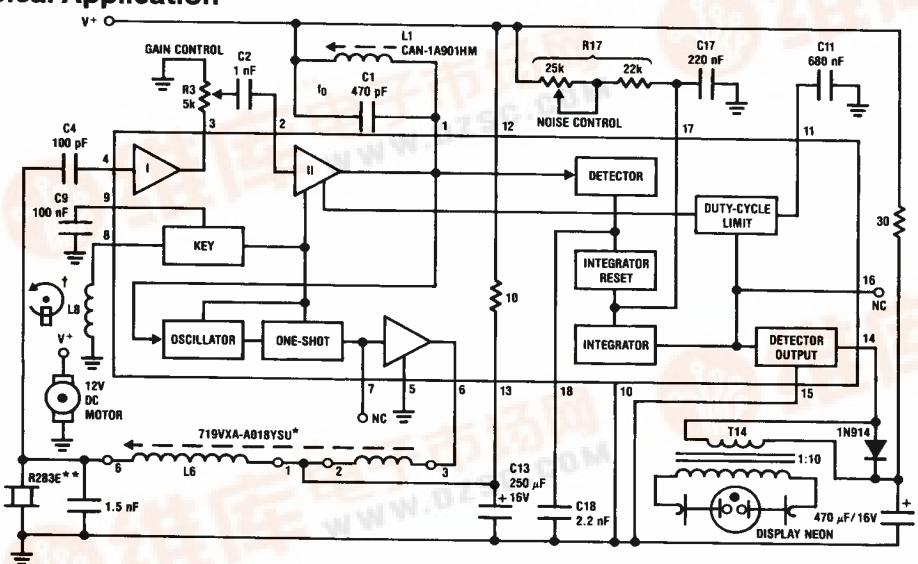

TL/H/7892-1

Order Number LM1812N
See NS Package Number N18A

†Note: Echo returns are displayed by a neon lamp on a motor driven disc. Connections to the neon are made through brushes and slip rings. Rotating with and counterbalancing the neon lamp is a permanent magnet whose field induces a pulse in a stationary coil (L8) as it passes by. This pulse keys the LM1812's transmitter.

*Available from Toko America, 1250 Feehanville Drive, Mount Prospect, Illinois 60056 Tel. (312) 297-0070

**Available from Massa Products Corporation, 280 Lincoln Street, Hingham, Massachusetts 02043 Tel. (617) 749-4800

FIGURE 1. 200 kHz Depth Sounder, 5 Feet to 100 Feet

找PDF 维库一下 pdf.dzsc.com

Absolute Maximum Ratings

If Military/Aerospace specified devices are required, please contact the National Semiconductor Sales Office/Distributors for availability and specifications.

Supply Voltage, V+ (Pin 12)	18V
Power Dissipation (Note 1)	1700 mW
Peak Current (Pins 6, 14)	1A
Input Current (Pins 4, 8)	50 mA
Operating Temperature	0°C to +70°C
Storage Temperature Range	−65°C to +150°C
Lead Temperature (Soldering, 10 sec.)	260°C

Electrical Characteristics $V^+ = 12V$, $T_A = 25°C$, unless otherwise noted

Parameter	Conditions	Min	Typ	Max	Units
Input Sensitivity (Note 2)	*Figure 2*		200	600	μVp-p
Input Noise			10		μVp-p
Transmitter Output, V_{SAT}	$I_6 = 1A$		1.3	3	V
Transmitter Output Leakage	V6 = 36V V8 = 0V		0.01	1	mA
Detector Output, V_{SAT}	$I_{14} = 1A$		1.5	3	V
Detector Output Leakage	V14 = 36V		0.01	1	mA
Transmitter Key Threshold	$I_8 = 1$ mA	0.55	0.7	0.9	V
Supply Current	$I_1 + I_{12}$ Receive Mode	5	8.5	20	mA
V8 for Receive Mode				0.3	V
Maximum Operating Frequency	Transmit Mode	200	325		kHz

Note 1: For operating at high temperatures, the LM1812 must be derated based upon a 125°C maximum junction temperature and a thermal resistance of 58°C C/W which applies for the device soldered in a printed circuit board and operating in a still air ambient. Due to the low duty cycle operation, only a small average power is dissipated in the package.

Note 2: A 47k resistor is added in parallel with the receiver tank at pin 1 to swamp variations in the coil's unloaded Q. The resistor reduces sensitivity (see equation 4) and is unnecessary in an actual applications circuit.

Test Circuit

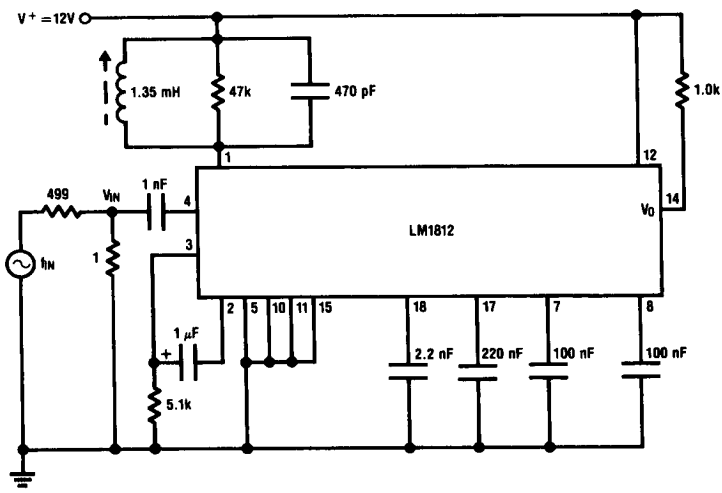

f_{IN} = 200 kHz

Input sensitivity = minimum V_{IN} for V_O to go low

FIGURE 2. Sensitivity Test Circuit

Application Hints

External Component Descriptions

Pin	Component	Typical Values	Pin Description	Component Function
1	L1, C1	500 μH–50 mH 250 pF–2.2 nF	Second gain stage output/ transmitter oscillator	Set the operating frequency (f_O) for the transmit oscillator and receiver
2	C2	500 pF–10 nF	Second gain stage input	Couples first and second gain stage
3	R3	5.1 kΩ	First gain stage output	Terminates emitter-follower output
4	C4	100 pF–10 nF	First gain stage input	Input coupling for the first gain stage
6	L6	50 μH–10 mH	Transmitter output	Matches LM1812 to the transducer
7	—	—	Transmitter driver	—
8	R8	1 kΩ–10 kΩ	Transmitter key	Current limiter for keying pulses up to 12V
9	C9	100 nF–10 μF	Receiver second stage delay	Sets the receiver turn-on delay after transmit (*Figure 10*)
11	C11	220 nF–2.2 μF	Detector output duty cycle limit	Limits the duty cycle of the detector output (short to ground to defeat)
13	C13	100 μF–1000 μF	Transmitter supply decoupling	Decouples the transmitter power supply
14	T14	$L_P \geq 50$ mH $N_S/N_P \cong 10$	Detector output	Drives neon display lamp
16	—	—	Output driver	—
17	R17, C17	22k–Open 10 nF–10 μF	Pulse integrator	Controls integration time constant (*Figure 13*)
18	C18	1 nF–100 μF	Pulse integrator reset	Controls integrator reset time constant (*Figure 14*)

TRANSDUCERS

The most common transducer used with the LM1812 is the piezo-ceramic type which is electrically similar to a quartz crystal. Piezo-ceramic transducers are resistive at only two frequencies, termed the resonant and antiresonant (f_r, f_a) frequencies. Elsewhere these transducers exhibit some reactance as shown in *Figure 3.*

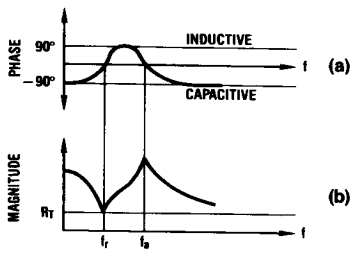

TL/H/7892–3

FIGURE 3. Phase and Magnitude of Transducer Impedance

For transmitting (to maximize electrical to mechanical efficiency), the transducer should be operated at its resonant frequency. For receiving (to maximize mechanical to electrical efficiency), optimum operation is at antiresonance. In two-transducer systems the resonant frequency of the transmit transducer is matched to the antiresonant frequency of the receiver.

The LM1812 is primarily used with a single transducer performing both transmit and receive functions. In this mode, maximum echo sensitivity will occur at a frequency close to resonance.

Transducer ringing is a troublesome phenomenon of single transducer systems. After a transducer has been electrically driven in the transmit mode, some time is required for the mechanical vibrations to stop. Depending on the amount of damping, this ringing may last from 10 to 1000 cycles. This mechanical ring produces an electrical signal strong enough (>200 μVp-p) to hold the detector ON, thus masking any echo signals occurring during this time.

A solution to this ring problem is to vary the receiver gain from a minimum, just after transmit, to a maximum, when the ring signal has dropped below the full-gain detection threshold. Since near-range echo signals are much stronger than ring signals, close echos will still be detected in spite of the reduced gain.

The gain is varied by attenuating the signal between pins 2 and 3 of the LM1812. *Figure 4* shows such an arrangement.

An externally generated 12V pulse (*Figure 17*) keys the transmitter and activates the attenuator. This pulse charges C to a voltage set by P8, turning the FET OFF. C slowly discharges through R, decreasing the gate voltage, which in turn decreases the attenuation of the signal passing from pin 3 to pin 2. R and C are selected so that the FET is not

Application Hints (Continued)

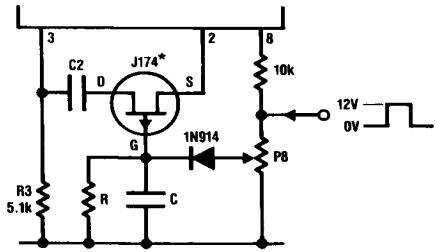

TL/H/7892–4

*Available from National Semiconductor Corporation

FIGURE 4. Time Variable FET Attenuator

completely turned ON until all detectable ringing has stopped. The duration of the ring is rarely specified by the transducer manufacturer and must be experimentally determined.

When designing an ultrasonic ranging system, three *transducer* parameters are very important:

1) resonant impedance (R_T in *Figure 3b*)

2) maximum peak-to-peak voltage

3) resonant frequency, f_r

This data, used in conjunction with the curves given in *Figure 6*, results in a functional output stage design.

TRANSMITTER

The transmitter (*Figure 5*) consists of an oscillator, a 1 μs one-shot, and a power amplifier.

When the transmitter is keyed ON at pin 8 the L1-C1 tank is switched to the oscillator mode. An on-chip 1 μs one-shot is triggered with each cycle of the oscillator and, in turn, drives a power amplifier. This one-shot has a reset time of 2 μs, limiting the maximum operating frequency to about 325 kHz. A transformer couples the transducer to the output stage.

The oscillator frequency is set by L1-C1 and can be calculated from

$$f_O = \frac{1}{2\pi\sqrt{L1C1}} \quad (1)$$

The L1-C1 tank must have a minimum R_p of 10 kΩ where

$$R_P = 2\pi f_O Q L1 \quad (2)$$

and Q = unloaded Q of L1-C1 tank.

The output transformer (L6) is designed with the aid of *Figure 6*. Curves are shown for two common frequencies: 40 kHz and 200 kHz. For a given load impedance (R_T, *Figure 3b*), a turns ratio for L6 is determined. In order not to exceed the transducer's specifications, the peak-to-peak output voltage may need to be adjusted using the equation:

$$V_{p\text{-}p} = 2V^{+}\left(\frac{N_S}{N_P}\right) \quad (3)$$

To ensure that the output stage is not overloaded, a current measurement must be made at pin 6. While the first few pulses of each transmit period may reach 2A or 3A, the steady-state current spikes must not exceed 1A. Current spikes are reduced by decreasing the turns ratio of L6.

The secondary of L6 tunes with C6 at the operating frequency, f_O.

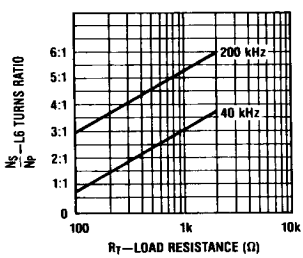

TL/H/7892–5

FIGURE 6. L6 Turns Ratio vs Load Resistance

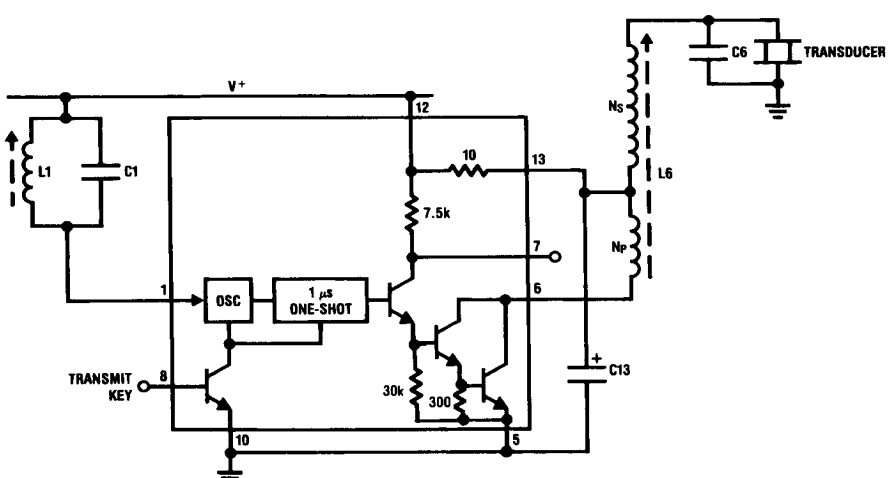

TL/H/7892–6

FIGURE 5. Transmitter

Application Hints (Continued)

Where additional power is desired, a pulse amplifier or a pulse stretcher can be used as shown in *Figure 7*. The pulse amplifier (*Figure 7a*) increases output current up to 5A. The pulse stretcher (*Figure 7b*) increases output current *and* pulse width. The wider pulse of *Figure 7b* is especially useful at lower frequencies where the relatively narrow 1 μs pulse creates a large peak current demand for a given power level. Pulse width as a function of R is plotted in *Figure 8*.

Pin 8 performs the function of switching the LM1812 into either the transmit or receive mode. When pin 8 is held high, the chip is in the transmit mode. When held low, it is in the receive mode. The input current at pin 8 should be designed to operate within a 1 mA–10 mA range.

RECEIVER

The receiver section (*Figure 9*) contains two separate gain stages.

In some applications large voltages are applied across the transducer during transmit. Since the receiver input is coupled to the transducer, some protection is necessary to limit the input current spikes to less than 50 mA. Where the voltage across the transducer is less than 200 Vp-p, a C4 reactance of 5 kΩ at the operating frequency is adequate protection. Above 200 Vp-p, a 5 kΩ resistor should be inserted in series with C4.

Since the L1-C1 tank circuit is shared with the oscillator, both the transmitter and receiver are always tuned to the same frequency. The second stage voltage gain is given by:

$$A_V = \frac{Q}{70}\sqrt{\frac{L1}{C1}} \qquad (4)$$

where Q = unloaded Q of L1-C1 tank.

When the LM1812 is in the transmit mode, the second gain stage is turned OFF. When switching back to the receive mode, the gain stage does not turn ON immediately, but instead turns ON after a slight delay as programmed by C9. This delay blanks the receiver (and therefore the detector) momentarily, giving the transducer time to stop ringing.

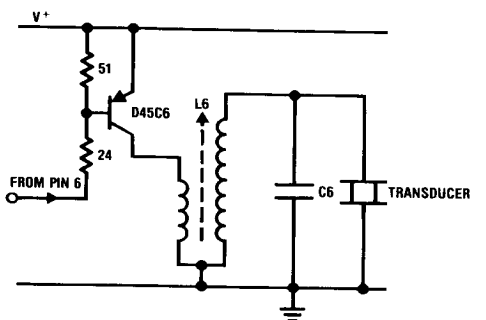

TL/H/7892–7

FIGURE 7a. Pulse Amplifier

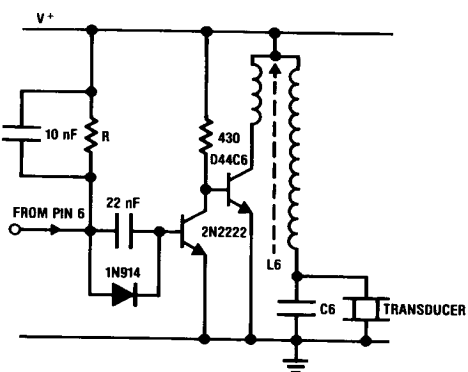

TL/H/7892–8

FIGURE 7b. Pulse Stretcher

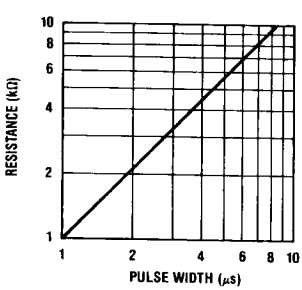

TL/H/7892–9

FIGURE 8. Pulse Stretcher Resistance vs Pulse Width

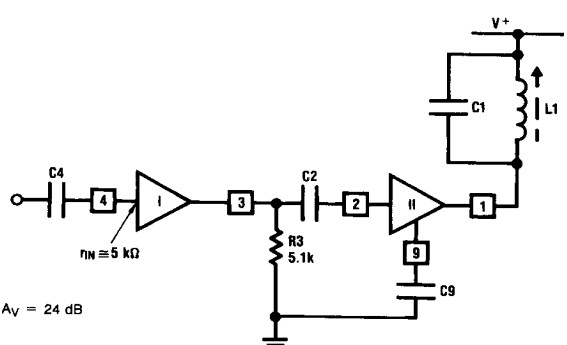

A_V = 24 dB

TL/H/7892–10

FIGURE 9. Receiver Section

Application Hints (Continued)

Delay as a function of C9 is plotted in *Figure 10*. The second gain stage may be shut OFF independently of pin 8 by pulling pin 9 low.

Due to the high gain of the receiver, care must be taken to avoid oscillations. Oscillation problems are reduced by keeping the components associated with pins 1 and 4 well separated (*Figure 11*). The transducer must be connected to the circuit with shielded cable. This not only helps avoid oscillation, but also reduces electrical noise pick-up. As a last resort, receiver gain can be reduced with R3 as in *Figure 1*.

PULSE DETECTOR

The pulse detector circuitry (*Figure 12*) consists of five distinct stages: 1) threshold detector, 2) pulse integrator reset, 3) pulse integrator, 4) output driver, 5) power output stage.

The detector (Q1, Q2) switches on all pin 1 signals that exceed 1.4 Vp-p. Since noise pulses are also detected, filtering is done by an integrator stage, C17 and R17, whose time constant is typically 10% to 50% of the transmit time. Integration starts when Q3 turns OFF, which occurs at the same moment Q1 and Q2 detect a signal. Pins 16 and 14 go low after the integration delay.

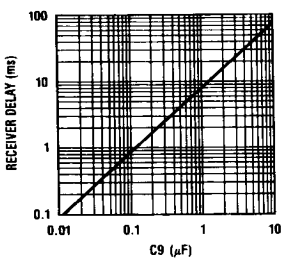

TL/H/7892–11

FIGURE 10. Receiver Delay vs C9

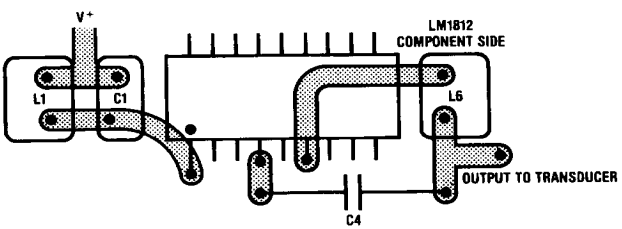

TL/H/7892–12

FIGURE 11. Component Side of Layout Showing Isolation of Receiver Input and Output

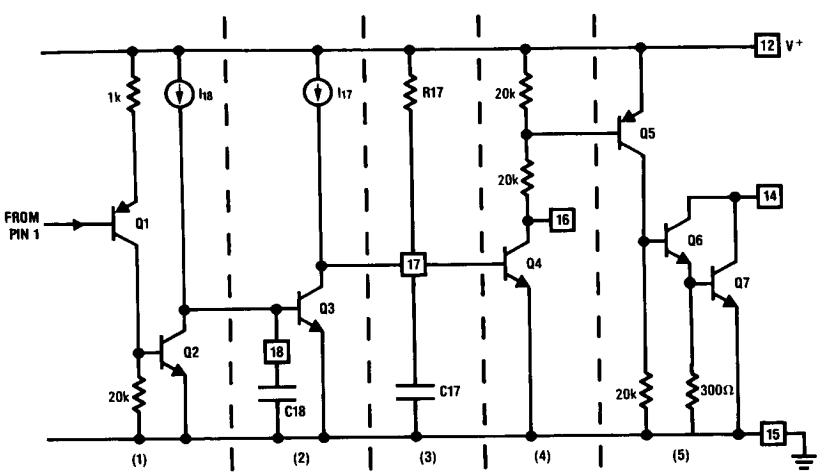

TL/H/7892–13

FIGURE 12. Simplified Circuit Diagram of Detector

Application Hints (Continued)

When the voltage at pin 1 becomes too small to activate the detector (< 1.4 Vp-p), the integrator is reset by Q3 after a delay introduced by C18. A delay of 1 to 10 cycles of the transmitted frequency is typical. These integration and reset delays, as a function of the external component values, are shown in *Figures 13* and *14*.

Pin 16 provides a CMOS compatible logic output. For driving high-intensity displays, pin 14 will sink up to 1A. When driving a transformer such as T14 in *Figure 1*, it is possible for the primary current to integrate up to destructive levels under conditions of multiple echo reception. Pin 11 is employed to protect the power output (pin 14). C11 integrates an internal current source while pin 14 is low. When V11 reaches a 0.7V threshold, the second gain stage is turned OFF. With the receiver OFF, no signal will be applied to the detector, and pin 14 will turn OFF. After another delay C11 is discharged and the receiver is then again activated. With C11 = 680 nF and a continuous echo return, the receiver will cycle ON and OFF every 6 ms. This function can be defeated by grounding pin 11.

TYPICAL OPERATION

Figure 15 shows typical waveforms at pins 1 and 16 for 200 kHz operation, with pin 9 left open. The pin 1 oscillator signal (5 Vp-p) lasts for 200 μs. The next 900 μs show a ring signal so strong that it is clipped by the receiver. The exponential nature of the decaying ring is seen for the next 500 μs. An echo return appears at 3.9 ms. Note that the detector is held low during the transmit period and for the duration of the ring.

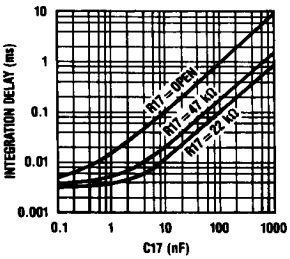

TL/H/7892-14

FIGURE 13. Integration Delay vs C17

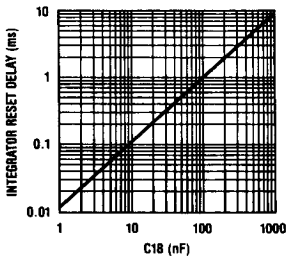

TL/H/7892-15

FIGURE 14. Integrator Reset Delay vs C18

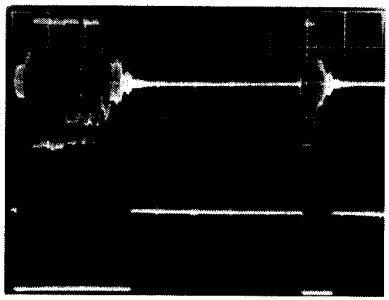

TL/H/7892-16

FIGURE 15. Typical Transmit/Receive Waveforms

Application Hints (Continued)

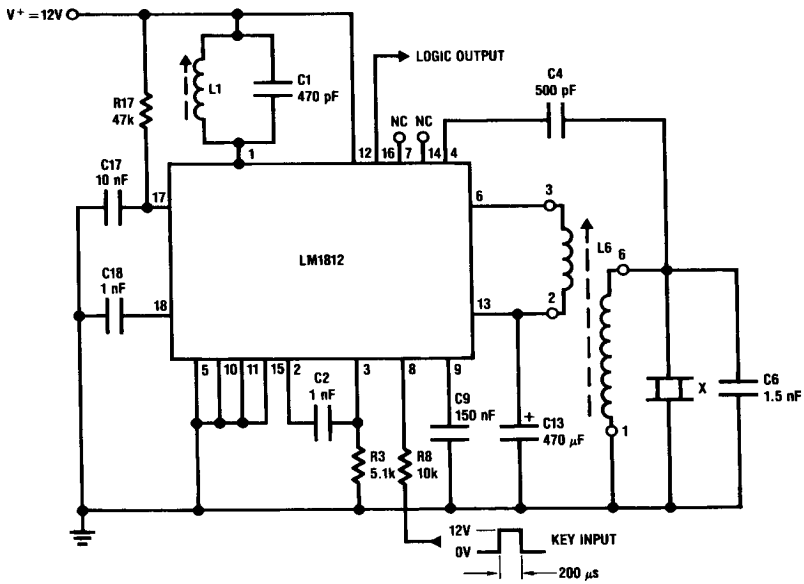

TL/H/7892–17

L1 = CAN-1A901HM (Toko)
L6 = 719VXA-A018YSU (Toko)
X = R283E (Massa Products)

FIGURE 16. 200 kHz Ultrasonic Ranging System for 4 Inches to 6 Feet in Air

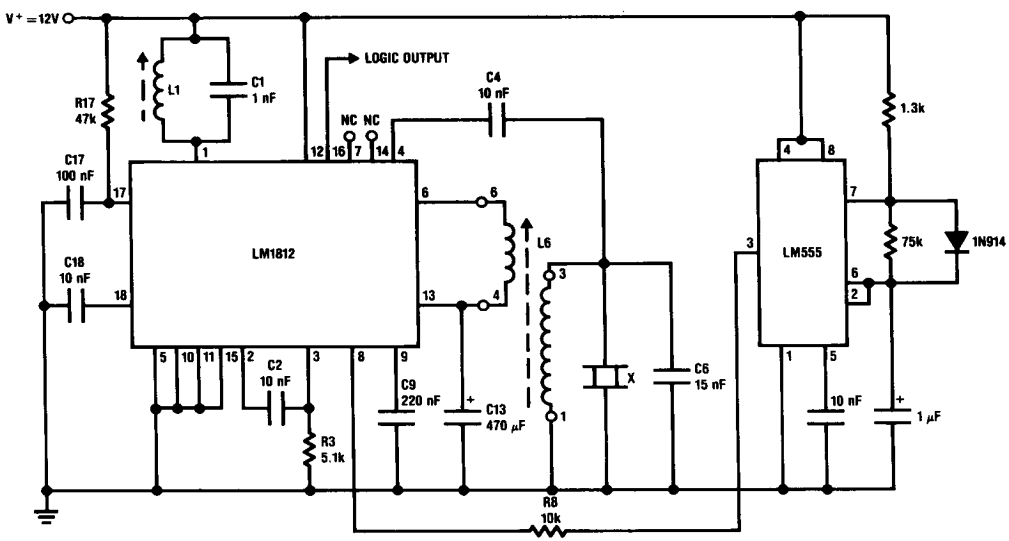

TL/H/7892–18

L1 = CLN-2A900HM (Toko)
L6 = 719VXA-A017AO (Toko)
X = EFR-OTB40K2 (Available from Panasonic Company, 1 Panasonic Way, Secaucus, NJ 07094, Tel. (201) 392-4651)

FIGURE 17. 40 kHz Ultrasonic Ranging System Covering a Range of 3 Feet to 20 Feet