查询TDA1072ATD-T供应商 捷多邦，专业PCB打样工厂，24小时加急出货

AM RECEIVER CIRCUIT

GENERAL DESCRIPTION

The TDA1072A integrated AM receiver circuit performs the active and part of the filtering functions of an AM radio receiver. It is intended for use in mains-fed home receivers and car radios. The circuit can be used for oscillator frequencies up to 50 MHz and can handle r.f. signals up to 500 mV. R.F. radiation and sensitivity to interference are minimized by an almost symmetrical design. The voltage-controlled oscillator provides signals with extremely low distortion and high spectral purity over the whole frequency range even when tuning with variable capacitance diodes. If required, band switching diodes can easily be applied. Selectivity is obtained using a block filter before the i.f. amplifier.

Features

- Inputs protected against damage by static discharge
- Gain-controlled r.f. stage
- Double balanced mixer
- Separately buffered, voltage-controlled and temperature-compensated oscillator, designed for simple coils
- Gain-controlled i.f. stage with wide a.g.c. range
- Full-wave, balanced envelope detector
- Internal generation of a.g.c. voltage with possibility of second-order filtering
- Buffered field strength indicator driver with short-circuit protection
- A.F. preamplifier with possibilities for simple a.f. filtering
- Electronic standby switch

QUICK REFERENCE DATA

Supply voltage range	V_P		7,5 to 18	V
Supply current range	I_P		15 to 30	mA
R.F. input voltage for S + N/N = 6 dB at m = 30%	V_i	typ.	1,5	μV
R.F. input voltage for 3% total harmonic distortion (THD) at m = 80%	V_i	typ.	500	mV
A.F. output voltage with V_i = 2 mV; f_i = 1 MHz; m = 30% and f_m = 400 Hz	$V_{o(af)}$	typ.	310	mV
A.G.C. range: change of V_i for 1 dB change of $V_{o(af)}$		typ.	86	dB
Field strength indicator voltage at V_i = 500 mV; $R_{L(9)}$ = 2,7 kΩ	V_{IND}	typ.	2,8	V

PACKAGE OUTLINE

16-lead DIL; plastic (SOT38).

找PDF pdf.dzsc.com

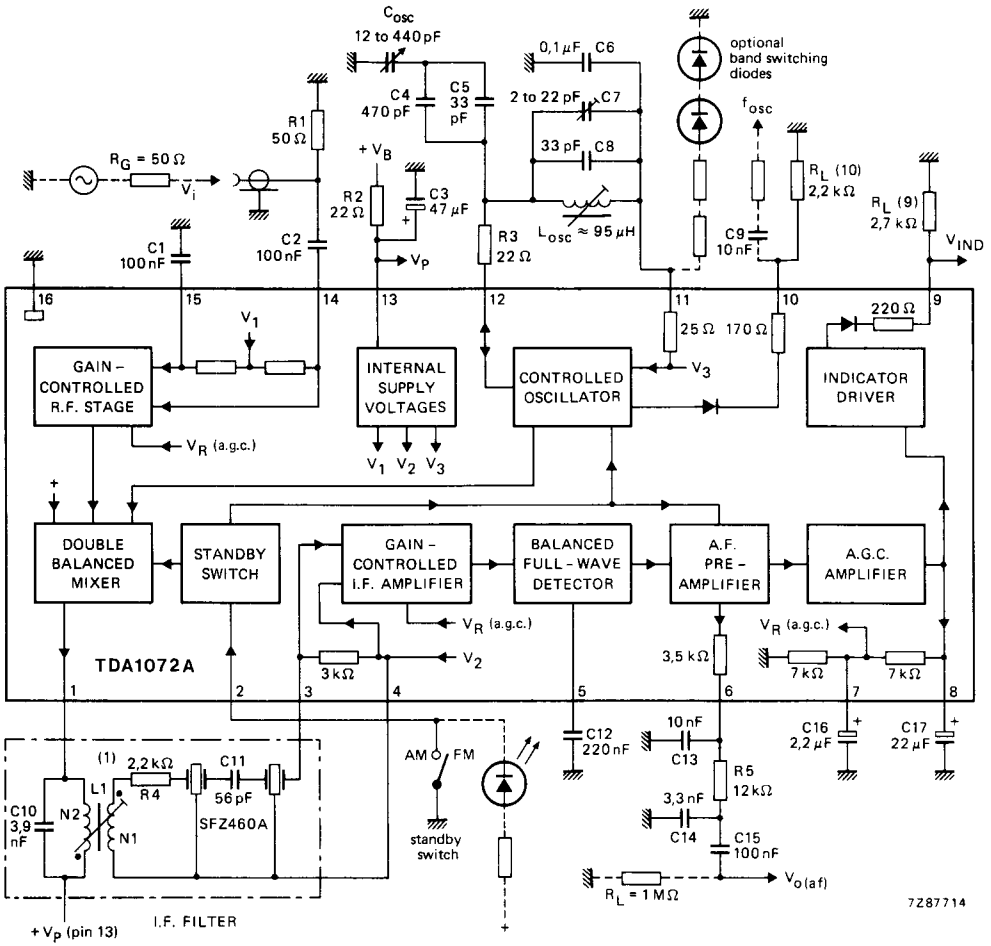

(1) Coil data: TOKO sample no. 7XNS-A7523DY; L1 : N1/N2 = 12/32; Q_o = 65; Q_B = 57.
Filter data: Z_F = 700 Ω at R_{3-4} = 3 kΩ; Z_I = 4,8 kΩ.

Fig. 1 Block diagram and test circuit (connections shown in broken lines are not part of the test circuit).

FUNCTIONAL DESCRIPTION

Gain-controlled r.f. stage and mixer

The differential amplifier in the r.f. stage employs an a.g.c. negative feedback network to provide a wide dynamic range. Very good cross-modulation behaviour is achieved by a.g.c. delays at the various signal stages. Large signals are handled with low distortion and the S/N ratio of small signals is improved. Low noise working is achieved in the differential amplifier by using transistors with low base resistance.

A double balanced mixer provides the i.f. output signal to pin 1.

Oscillator

The differential amplifier oscillator is temperature compensated and is suitable for simple coil connection. The oscillator is voltage-controlled and has little distortion or spurious radiation. It is specially suitable for electronic tuning using variable capacitance diodes. Band switching diodes can easily be applied using the stabilized voltage $V_{11\text{-}16}$. An extra buffered oscillator output (pin 10) is available for driving a synthesizer. If this is not needed, resistor $R_{L(10)}$ can be omitted.

Gain-controlled i.f. amplifier

This amplifier comprises two cascaded, variable-gain differential amplifier stages coupled by a band-pass filter. Both stages are gain-controlled by the a.g.c. negative feedback network.

Detector

The full-wave, balanced envelope detector has very low distortion over a wide dynamic range. Residual i.f. carrier is blocked from the signal path by an internal low-pass filter.

A.F. preamplifier

This stage preamplifies the audio frequency output signal. The amplifier output has an emitter follower with a series resistor which, together with an external capacitor, yields the required low-pass for a.f. filtering.

A.G.C. amplifier

The a.g.c. amplifier provides a control voltage which is proportional to the carrier amplitude. Second-order filtering of the a.g.c. voltage achieves signals with very little distortion, even at low audio frequencies. This method of filtering also gives fast a.g.c. settling time which is advantageous for electronic search tuning. The a.g.c. settling time can be further reduced by using capacitors of smaller value in the external filter (C16 and C17). The a.g.c. voltage is fed to the r.f. and i.f. stages via suitable a.g.c. delays. The capacitor at pin 7 can be omitted for low-cost applications.

Field strength indicator output

A buffered voltage source provides a high-level field strength output signal which has good linearity for logarithmic input signals over the whole dynamic range. If the field strength information is not needed, $R_{L(9)}$ can be omitted.

Standby switch

This switch is primarily intended for AM/FM band switching. During standby mode the oscillator, mixer and a.f. preamplifier are switched off.

Short-circuit protection

All pins have short-circuit protection to ground.

RATINGS

Limiting values in accordance with the Absolute Maximum Rating System (IEC 134)

Supply voltage	$V_P = V_{13\text{-}16}$	max.	20	V
Total power dissipation	P_{tot}	max.	875	mW
Input voltage	$\lvert V_{14\text{-}15} \rvert$	max.	12	V
	$-V_{14\text{-}16}$, $-V_{15\text{-}16}$	max.	0,6	V
	$V_{14\text{-}16}$, $V_{15\text{-}16}$	max.	V_P	V
Input current	$\lvert I_{14} \rvert$, $\lvert I_{15} \rvert$	max.	200	mA
Operating ambient temperature range	T_{amb}	−40 to	+80	°C
Storage temperature range	T_{stg}	−55 to	+150	°C
Junction temperature	T_j	max.	+125	°C

THERMAL RESISTANCE

From junction to ambient	$R_{th\ j\text{-}a}$	=	80	K/W

DEVICE CHARACTERISTICS

$V_P = V_{13\text{-}16} = 8{,}5$ V; $T_{amb} = 25$ °C; $f_i = 1$ MHz; $f_m = 400$ Hz; m = 30%; $f_{if} = 460$ kHz; measured in test circuit of Fig. 1; unless otherwise specified

parameter	symbol	min.	typ.	max.	unit
Supplies					
Supply voltage	$V_P = V_{13\text{-}16}$	7,5	8,5	18	V
Supply current	$I_P = I_{13}$	15	23	30	mA
R.F. stage and mixer					
Input voltage (d.c. value)	$V_{14\text{-}16}$, $V_{15\text{-}16}$	–	$V_P/2$	–	V
R.F. input impedance at $V_i < 300\ \mu V$	$R_{14\text{-}16}$, $R_{15\text{-}16}$	–	5,5	–	kΩ
	$C_{14\text{-}16}$, $C_{15\text{-}16}$	–	25	–	pF
R.F. input impedance at $V_i > 10$ mV	$R_{14\text{-}16}$, $R_{15\text{-}16}$	–	8	–	kΩ
	$C_{14\text{-}16}$, $C_{15\text{-}16}$	–	22	–	pF
I.F. output impedance	$R_{1\text{-}16}$	500	–	–	kΩ
	$C_{1\text{-}16}$	–	6	–	pF
Conversion transconductance before start of a.g.c.	I_1/V_i	–	6,5	–	mA/V
Maximum i.f. output voltage, inductive coupling to pin 1	$V_{1\text{-}13(p\text{-}p)}$	–	5	–	V
D.C. value of output current (pin 1) at $V_i = 0$ V	I_1	–	1,2	–	mA
A.G.C. range of input stage		–	30	–	dB
R.F. signal handling capability: input voltage for THD = 3% at m = 80%	$V_{i(rms)}$	–	500	–	mV

parameter	symbol	min.	typ.	max.	unit
Oscillator					
Frequency range	f_{osc}	0,6	–	60	MHz
Oscillator amplitude (pins 11 to 12)	$V_{11\text{-}12}$	–	130	150	mV
External load impedance	$R_{12\text{-}11(ext)}$	0,5	–	200	kΩ
External load impedance for no oscillation	$R_{12\text{-}11(ext)}$	–	–	60	Ω
Ripple rejection at $V_{P(rms)}$ = 100 mV; f_P = 100 Hz ($RR = 20 \log [V_{13\text{-}16}/V_{11\text{-}16}]$)	RR	–	55	–	dB
Source voltage for switching diodes (6 x V_{BE})	$V_{11\text{-}16}$	–	4,2	–	V
D.C. output current (for switching diodes)	$-I_{11}$	0	–	20	mA
Change of output voltage at ΔI_{11} = 20 mA (switch to maximum load)	$\Delta V_{11\text{-}16}$	–	0,5	–	V
Buffered oscillator output					
D.C. output voltage	$V_{10\text{-}16}$	–	0,7	–	V
Output signal amplitude	$V_{10\text{-}16(p\text{-}p)}$	–	320	–	mV
Output impedance	R_{10}	–	170	–	Ω
Output current	$-I_{10(peak)}$	–	–	3	mA
I.F., a.g.c. and a.f. stages					
D.C. input voltage	$V_{3\text{-}16}$, $V_{4\text{-}16}$	–	2,0	–	V
I.F. input impedance	$R_{3\text{-}4}$	2,4	3	3,9	kΩ
	$C_{3\text{-}4}$	–	7	–	pF
I.F. input voltage for THD = 3% at m = 80%	$V_{3\text{-}4}$	–	90	–	mV
Voltage gain before start of a.g.c.	$V_{3\text{-}4}/V_{6\text{-}16}$	–	68	–	dB
A.G.C. range of i.f. stages: change of $V_{3\text{-}4}$ for 1 dB change of $V_{o(af)}$; $V_{3\text{-}4(ref)}$ = 75 mV	$\Delta V_{3\text{-}4}$	–	55	–	dB
A.F. output voltage at $V_{3\text{-}4(if)}$ = 50 μV	$V_{o(af)}$	–	130	–	mV
A.F. output voltage at $V_{3\text{-}4(if)}$ = 1 mV	$V_{o(af)}$	–	310	–	mV
A.F. output impedance (pin 6)	$\lvert Z_o \rvert$	–	3,5	–	kΩ
Indicator driver					
Output voltage at V_i = 0 mV; $R_{L(9)}$ = 2,7 kΩ	$V_{9\text{-}16}$	–	20	150	mV
Output voltage at V_i = 500 mV; $R_{L(9)}$ = 2,7 kΩ	$V_{9\text{-}16}$	2,5	2,8	3,1	V
Load resistance	$R_{L(9)}$	1,5	–	–	kΩ

DEVICE CHARACTERISTICS (continued)

parameter	symbol	min.	typ.	max.	unit
Standby switch					
Switching threshold at V_P = 7,5 to 18 V; T_{amb} = −40 to + 80 °C					
on-voltage	$V_{2\text{-}16}$	0	–	2,0	V
off-voltage	$V_{2\text{-}16}$	3,5	–	20	V
on-current at $V_{2\text{-}16}$ = 0 V	$-I_2$	–	–	200	μA
off-current at $V_{2\text{-}16}$ = 20 V	$\|I_2\|$	–	–	10	μA

OPERATING CHARACTERISTICS

V_P = 8,5 V; f_i = 1 MHz; m = 30%; f_m = 400 Hz; T_{amb} = 25 °C; measured in Fig. 1; unless otherwise specified

parameter	symbol	min.	typ.	max.	unit
R.F. sensitivity					
R.F. input required for S + N/N = 6 dB	V_i	–	1,5	–	μV
R.F. input required for S + N/N = 26 dB	V_i	–	15	–	μV
R.F. input required for S + N/N = 46 dB	V_i	–	150	–	μV
R.F. input at start of a.g.c.	V_i	–	30	–	μV
R.F. large signal handling					
R.F. input at THD = 3%; m = 80%	V_i	–	500	–	mV
R.F. input at THD = 3%; m = 30%	V_i	–	700	–	mV
R.F. input at THD = 10%; m = 30%	V_i	–	900	–	mV
A.G.C. range					
Change of V_i for 1 dB change of $V_{o(af)}$; $V_{i(ref)}$ = 500 mV	ΔV_i	–	86	–	dB
Change of V_i for 6 dB change of $V_{o(af)}$; $V_{i(ref)}$ = 500 mV	ΔV_i	–	91	–	dB
Output signal					
A.F. output voltage at V_i = 4 μV; m = 80%	$V_{o(af)}$	–	130	–	mV
A.F. output voltage at V_i = 1 mV	$V_{o(af)}$	240	310	390	mV
THD at V_i = 1 mV; m = 80%	d_{tot}	–	0,5	–	%
THD at V_i = 500 mV; m = 30%	d_{tot}	–	1	–	%
Signal-to-noise ratio at V_i = 100 mV	(S + N)/N	–	58	–	dB
Ripple rejection at V_i = 2 mV; $V_{P(rms)}$ = 100 mV; f_P = 100 Hz ($RR = 20 \log [V_P/V_{o(af)}]$)	RR	–	38	–	dB

parameter	symbol	min.	typ.	max.	unit
Unwanted signals					
Suppression of i.f. whistles at V_i = 15 μV; m = 0% related to a.f. signal of m = 30%					
at $f_i \approx 2 \times f_{if}$	α_{2if}	–	37	–	dB
at $f_i \approx 3 \times f_{if}$	α_{3if}	–	44	–	dB
I.F. suppression at r.f. input					
for symmetrical input	α_{if}	–	40	–	dB
for asymmetrical input	α_{if}	–	40	–	dB
Residual oscillator signal at mixer output					
at f_{osc}	$I_{1(osc)}$	–	1	–	μA
at 2 x f_{osc}	$I_{1(2osc)}$	–	1,1	–	μA

APPLICATION INFORMATION

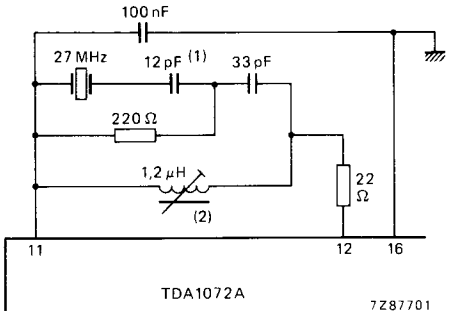

(1) Capacitor values depend on crystal type.
(2) Coil data: 9 windings of 0,1 mm dia laminated Cu wire on TOKO coil set 7K 199CN; Q_o = 80.

Fig. 2 Oscillator circuit using quartz crystal; centre frequency = 27 MHz.

APPLICATION INFORMATION (continued)

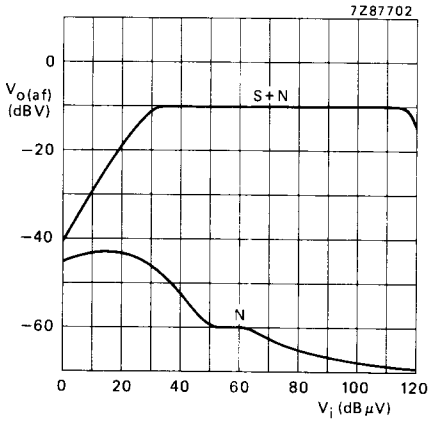

Fig. 3 A.F. output as a function of r.f. input in the circuit of Fig. 1; f_i = 1 MHz; f_m = 400 Hz; m = 30%.

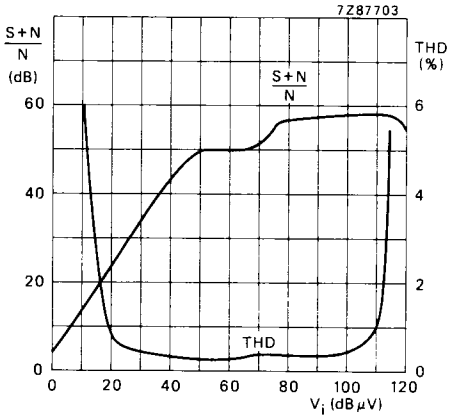

Fig. 4 Total harmonic distortion and (S + N)/N as functions of r.f. input in the circuit of Fig. 1; m = 30% for (S + N)/N curve and m = 80% for THD curve.

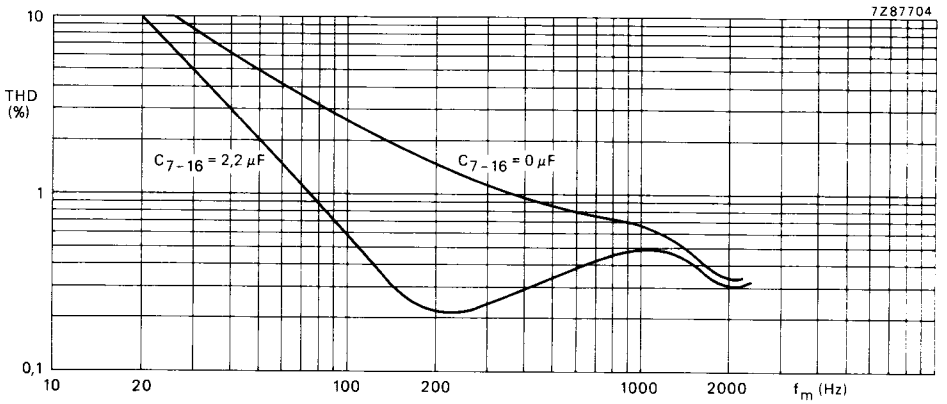

Fig. 5 Total harmonic distortion as a function of modulation frequency at V_i = 5 mV; m = 80%; measured in the circuit of Fig. 1 with $C_{7\text{-}16(ext)}$ = 0 μF and 2,2 μF.

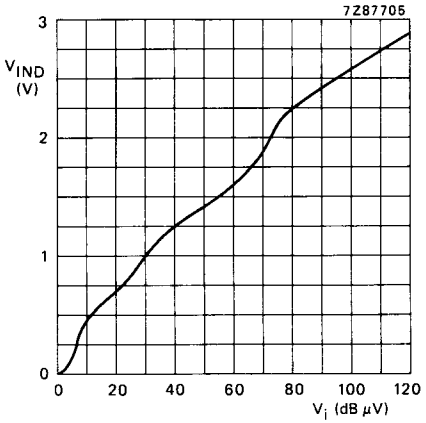

Fig. 6 Indicator driver voltage as a function of r.f. input in the circuit of Fig. 1.

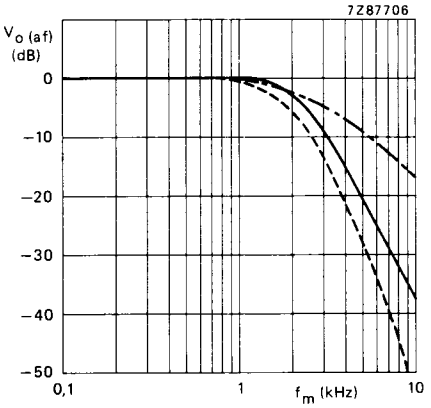

Fig. 7 Typical frequency response curves from Fig. 1 showing the effect of filtering as follows:
——————— with i.f. filter;
—·—·—·—·— with a.f. filter;
— — — — — — with i.f. and a.f. filters.

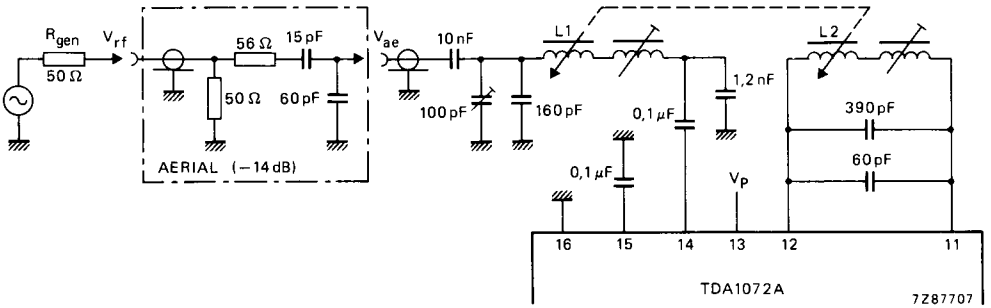

Fig. 8 Car radio application with inductive tuning.

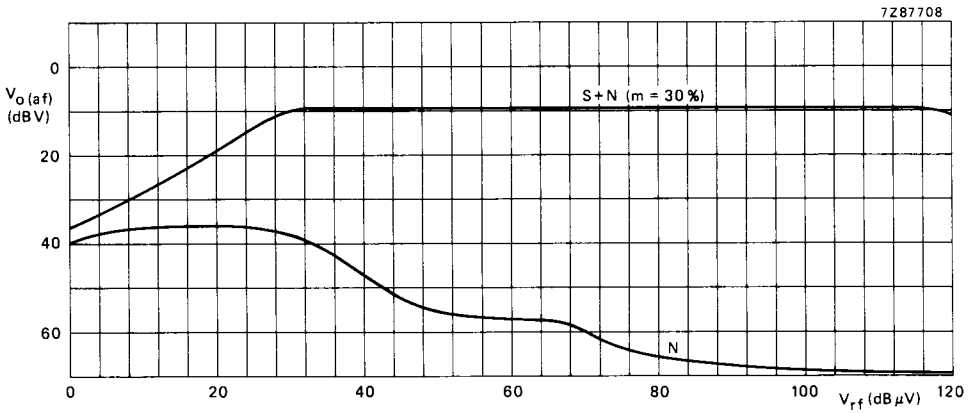

Fig. 9 A.F. output as a function of r.f. input using the circuit of Fig. 8 with that of Fig. 1.

APPLICATION INFORMATION (continued)

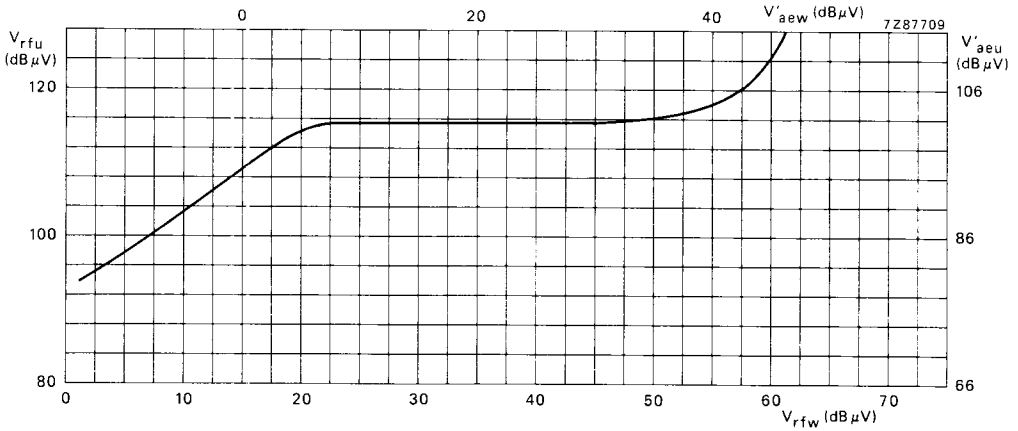

Fig. 10 Suppression of cross-modulation as a function of input signal, measured in the circuit of Fig. 8 with the input circuit as shown in Fig. 11. Curve is for Wanted $V_{o(af)}$/Unwanted $V_{o(af)}$ = 20 dB; V_{rfw}, V_{rfu} are signals at the aerial input, V'_{aew}, V'_{aeu} are signals at the unloaded output of the aerial.

Wanted signal (V'_{aew}, V_{rfw}): f_i = 1 MHz; f_m = 400 Hz; m = 30%.

Unwanted signal (V'_{aeu}, V_{rfu}): f_i = 900 kHz; f_m = 400 Hz; m = 30%.

Effective selectivity of input tuned circuit = 21 dB.

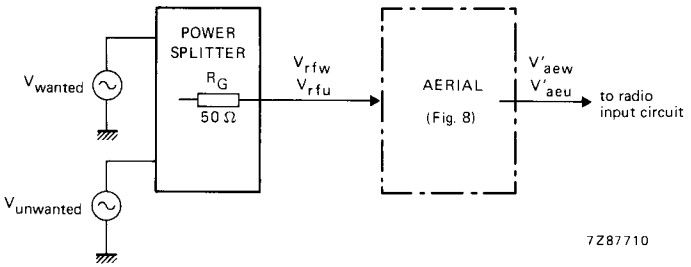

Fig. 11 Input circuit to show cross-modulation suppression (see Fig. 10).

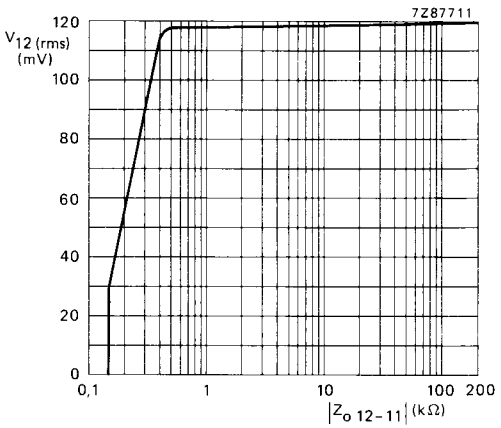

Fig. 12 Oscillator amplitude as a function of pin 11, 12 impedance in the circuit of Fig. 8.

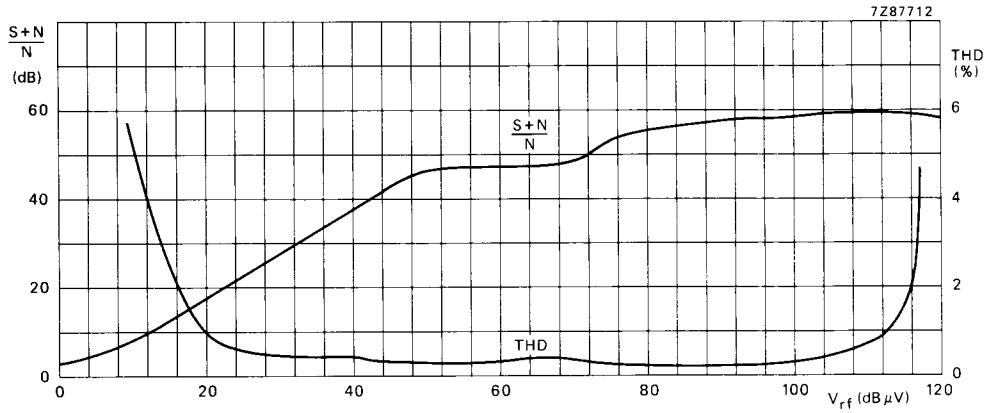

Fig. 13 Total harmonic distortion and (S + N)/N as functions of r.f. input using the circuit of Fig. 8 with that of Fig. 1.

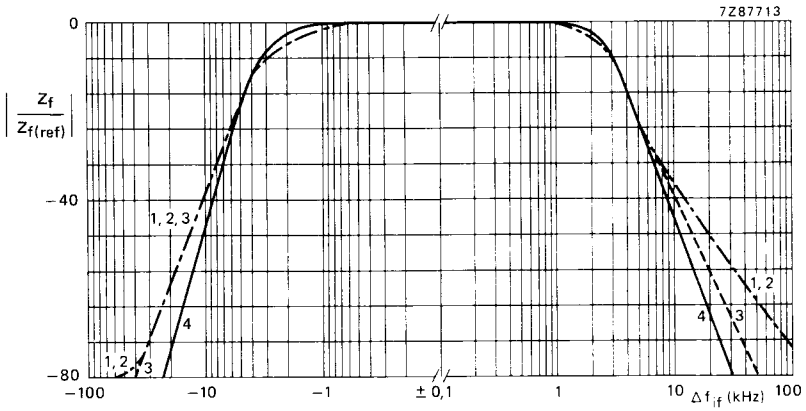

Fig. 14 Forward transfer impedance as a function of intermediate frequency for filters 1 to 4 shown in Fig. 15; centre frequency = 455 kHz.

APPLICATION INFORMATION (continued)

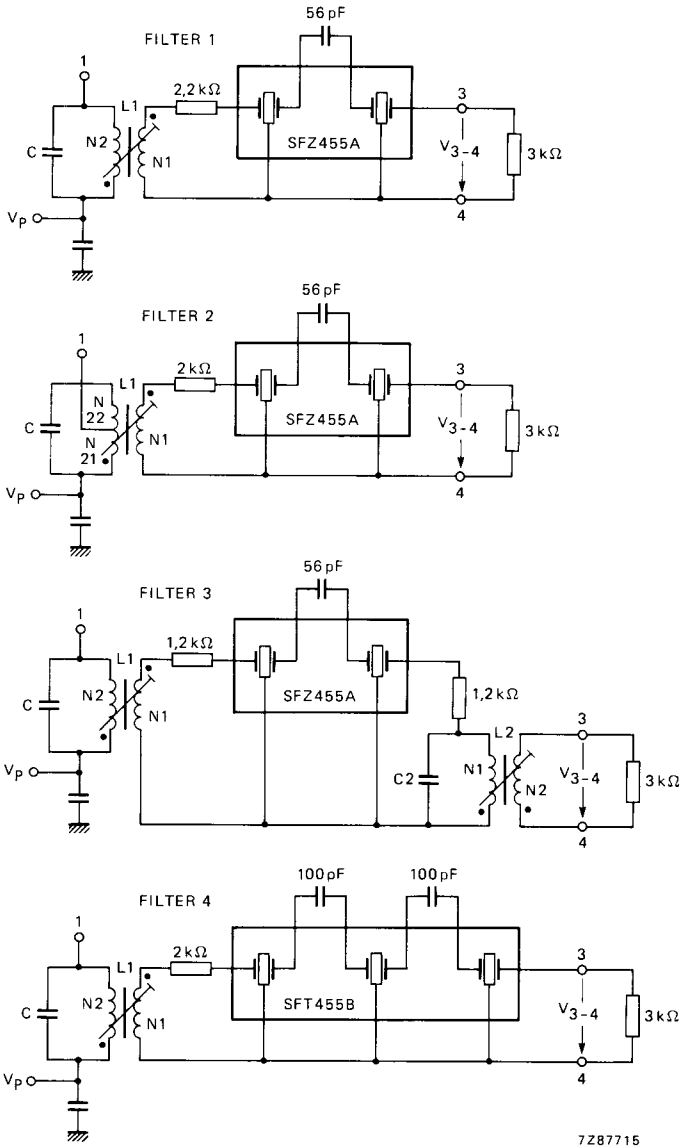

Fig. 15 I.F. filter variants applied to the circuit of Fig. 1. For filter data, refer to Table 1.

Table 1 Data for I.F. filters shown in Fig. 15. Criterium for adjustment is Z_F = maximum (optimum selectivity curve at centre frequency f_0 = 455 kHz). See also Fig. 14.

filter no.	1	2	3		4	unit
Coil data	L1	L1	L1	L2	L1	
Value of C	3900	430	3900	4700	3900	pF
N1 : N2	12 : 32	13 : (33 + 66)	15 : 31	29 : 29	13 : 31	
Diameter of Cu laminated wire	0,09	0,08	0,09	0,08	0,09	mm
Q_0	65 (typ.)	50	75	60	75	
Schematic* of windings	12 32	13 66 33	15 31	29 29 (N1) (N2)	13 31	
Toko order no.	7XNS-A7523DY	L7PES-A0060BTG	7XNS-A7518DY	7XNS-A7521AIH	7XNS-A7519DY	
Resonators						
Murata type	SFZ455A	SFZ455A	SFZ455A		SFT455B	
D (typical value)	4	4	4		6	dB
R_G, R_L	3	3	3		3	kΩ
Bandwidth (−3 dB)	4,2	4,2	4,2		4,5	kHz
S_{9kHz}	24	24	24		38	dB
Filter data						
Z_I	4,8	3,8	4,2		4,8	kΩ
Q_B	57	40	52 (L1)	18 (L2)	55	
Z_F	0,70	0,67	0,68		0,68	kΩ
Bandwidth (−3 dB)	3,6	3,8	3,6		4,0	kHz
S_{9kHz}	35	31	36		42	dB
S_{18kHz}	52	49	54		64	dB
S_{27kHz}	63	58	66		74	dB

* The beginning of an arrow indicates the beginning of a winding; N1 is always the inner winding, N2 the outer winding.

APPLICATION INFORMATION (continued)

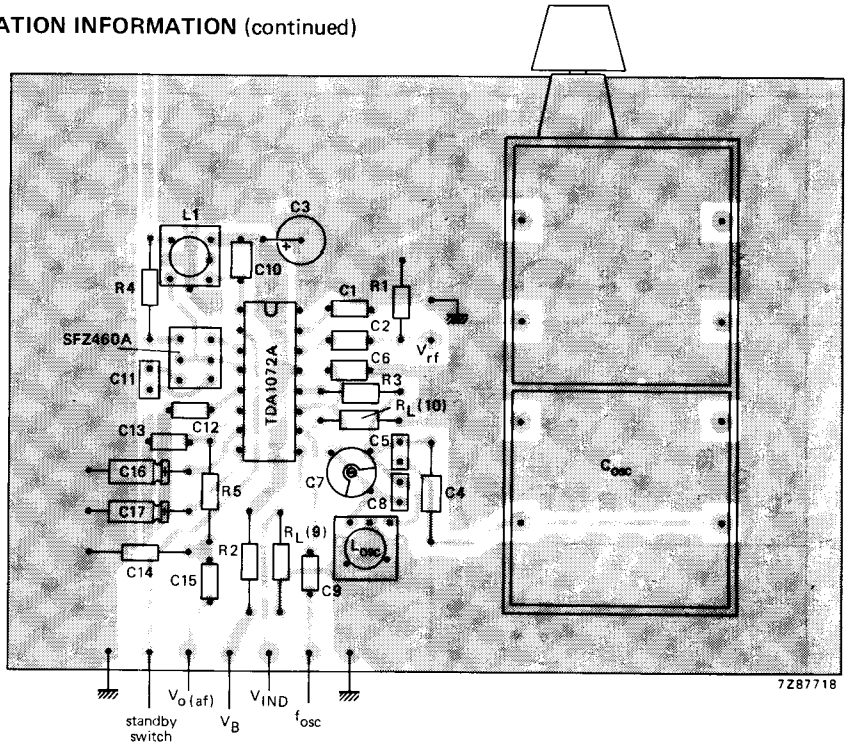

Fig. 16 Printed-circuit board component side, showing component layout. For circuit diagram see Fig. 1.

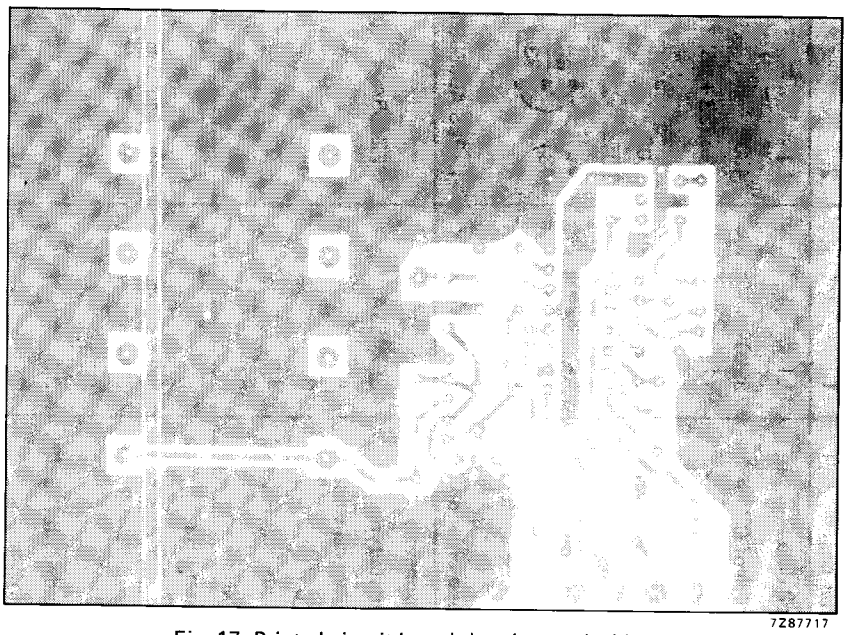

Fig. 17 Printed-circuit board showing track side.

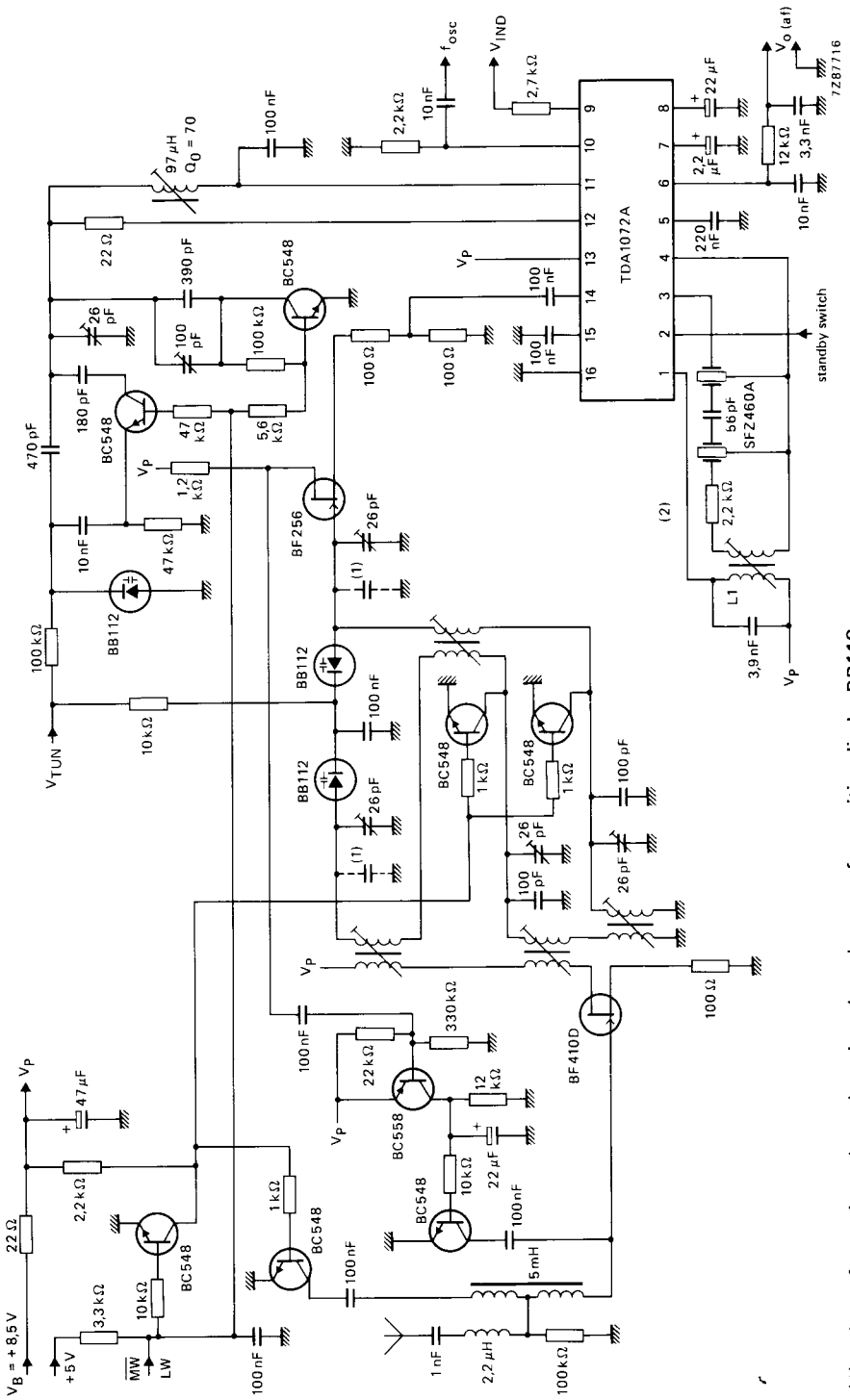

(1) Values of capacitors depend on the selected group of capacitive diodes BB112.
(2) For i.f. filter and coil data refer to Fig. 1.

Fig. 18 Car radio application with capacitive diode tuning and electronic MW/LW switching. The circuit includes pre-stage a.g.c. optimised for good large-signal handling.