查询MTS103供应商 捷多邦，专业PCB打样工厂，24小时加急出货

MTS102
MTS103
MTS105

SILICON TEMPERATURE SENSORS

Silicon Temperature Sensors

Designed for use in temperature sensing applications in automotive, consumer and industrial products requiring low cost and high accuracy.

- Precise Temperature Accuracy Over Extreme Temperature MTS102: ± 2°C from – 40°C to +150°C
- Precise Temperature Coefficient
- Fast Thermal Time Constant
  3 Seconds — Liquid
  8 Seconds — Air
- Linear V_{BE} versus Temperature Curve Relationship
- Other Packages Available

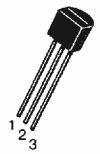

CASE 29–04, STYLE 1
TO–226AA
(TO–92)

Pin Number		
1	2	3
Emitter	Base	Collector

MAXIMUM RATINGS

Rating	Symbol	Value	Unit
Emitter–Base Voltage	V_{EB}	4.0	Vdc
Collector Current — Continuous(5)	I_C	100	mAdc
Operating and Storage Junction Temperature Range	T_J, T_{stg}	–55 to +150	°C

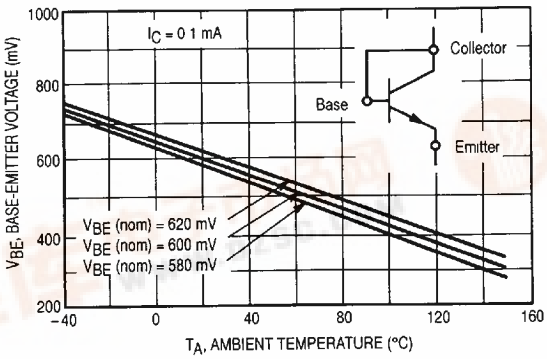

Figure 1. Base–Emitter Voltage versus Ambient Temperature

6367255 0088911 50T
找PDF 维库一下 pdf.dzsc.com

ELECTRICAL CHARACTERISTICS (T_A = 25°C unless otherwise noted)

Characteristic		Symbol	Min	Typ	Max	Unit
Supply Voltage		V_S	−0.2	—	35	Vdc
Output Voltage		V_{out}	−1.0	—	6.0	Vdc
Output Current		I_o	—	—	10	mAdc
Emitter–Base Breakdown Voltage (I_E = 100 μAdc, I_C = 0)		$V_{(BR)EBO}$	4.0	—	—	Vdc
Base–Emitter Voltage (I_C = 0.1 mA)		V_{BE}	580	595	620	mV
Base–Emitter Voltage Matching(1) (I_C = 0.1 mA, T_A = 25°C ±0.05°C)		ΔV_{BE}				mV
	MTS102		−3.0	—	3.0	
	MTS103		−4.0	—	4.0	
	MTS105		−7.0	—	7.0	
Temperature Matching Accuracy(2) (T1 = 40°C, T2= +150°C, T_A = 25°C ± 0.05°C)		ΔT				°C
	MTS102		−3.0	—	3.0	
	MTS103		−3.0	—	3.0	
	MTS105		−5.0	—	5.0	
Temperature Coefficient (3,4) (V_{BE} = 595 mV, I_C = 0.1 mA)		T_C	−2.28	−2.265	−2.26	mV/°C
Thermal Time Constant		τ_{TH}				s
Liquid			—	3.0	—	
Flowing Air			—	8.0	—	
Dependence of T_C on V_{BE} @ 25°C(4) (Figure 3)		$\Delta T_C/\Delta V_{BE}$	—	0.0033	—	mV/°C mV

THERMAL CHARACTERISTICS

Thermal Resistance, Junction to Ambient	$R_{\theta JA}$	—	—	200	°C/W

MECHANICAL CHARACTERISTICS

Weight	—	—	87	—	Grams

NOTES:

1. All devices within any one group or package will be matched for V_{BE} to the tolerance identified in the electrical characteristics table. Each device will be labeled with the mean V_{BE} value for that group.
2. All devices within an individual group, as described in Note 1, will track within the specified temperature accuracy. This includes variations in T_C, V_{BE}, and nonlinearity in the range −40 to +150°C. Nonlinearity is typically less than ±1°C in this range. (See Figure 4)
3. The T_C as defined by a least–square linear regression for V_{BE} versus temperature over the range −40 to +150°C for a nominal V_{BE} of 595 mV at 25°C. For other nominal V_{BE} values the value of the T_C must be adjusted for the dependence of the T_C on V_{BE} (see Note 4).
4. For nominal VBE at 25°C other than 595 mV, the T_C must be corrected using the equation $T_C = -2.265 + 0.003\ (V_{BE} - 595)$ where V_{BE} is in mV and the T_C is in mV/°C. The accuracy of this T_C is typically ±0.01 mV/°C.
5. For maximum temperature accuracy, I_C should not exceed 2 mA. (See Figure 2)

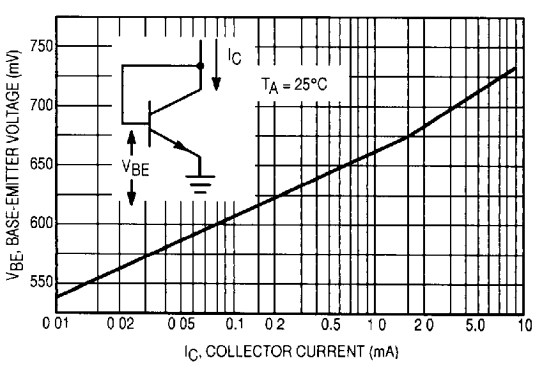

Figure 2. Base–Emitter Voltage versus Collector–Emitter Current

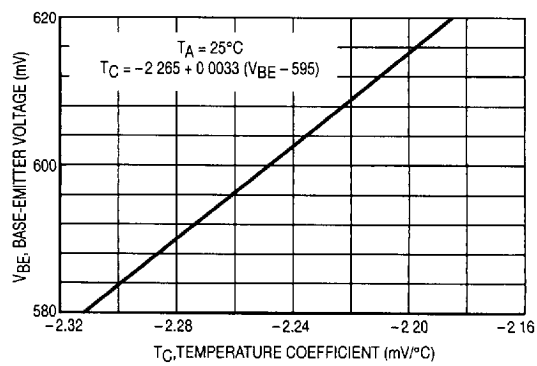

Figure 3. Temperature Coefficient versus Base–Emitter Voltage

6367255 0088912 446

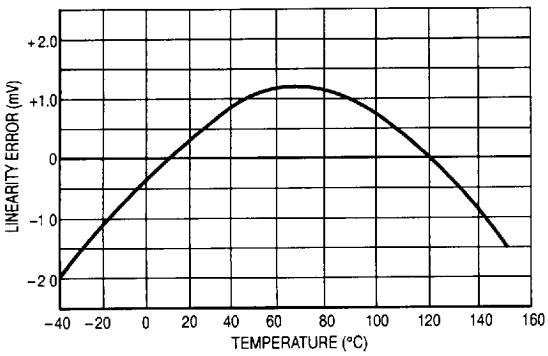

Figure 4. Linearity Error versus Temperature

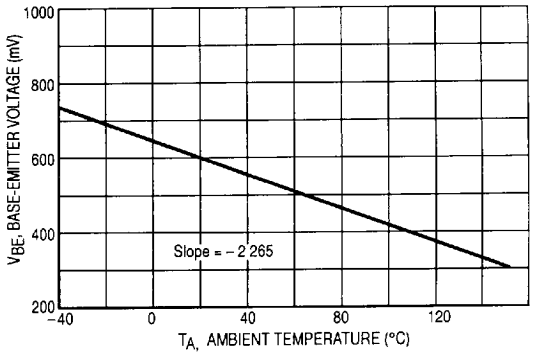

Figure 5. V_{BE} versus Ambient Temperature

APPLICATIONS INFORMATION

The base and collector leads of the device should be connected together in the operating circuit (pins 2 and 3). They are not internally connected.

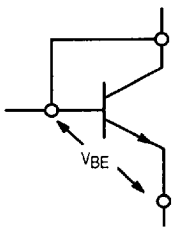

The following example describes how to determine the V_{BE} versus temperature relationship for a typical shipment of various V_{BE} groups.

EXAMPLE:

Given — Customer receives a shipment of MTS102 devices. The shipment consists of three groups of different nominal V_{BE} values.
Group 1: V_{BE} (nom) = 595 mV
Group 2: V_{BE} (nom) = 580 mV
Group 3: V_{BE} (nom) = 620 mV

Find — V_{BE} versus temperature Relationship.

1. Determine value of T_C:
   a. If V_{BE} (nom) = 595 mV, $T_C = -2.265$ mV/°C from the Electrical Characteristics table.
   b. If V_{BE} (nom) is less than or greater than 595 mV determine T_C from the relationship described in Note 4. $T_C = -2.265 + 0.0033\ (V_{BE} - 595)$ or see Figure 3.
2. Determine the V_{BE} value at extremes, −40°C and +150°C:

   $V_{BE}(T_A) = V_{BE}(25°C) + (T_C)(T_A - 25°C)$ where $V_{BE}(T_A)$ = value of V_{BE} at desired temperature.
3. Plot the V_{BE} versus T_A curve using two V_{BE} values: V_{BE} (−40°C), V_{BE}(25°C), or V_{BE}(+150°C)
4. Given any measured V_{BE}, the value of T_A (to the accuracy value specified: MTS102 − ±2°C, MTS103 − ±35°C, MTS105 − ±5°C) can be read from Figure 5 or calculated from equation 2.
5. Higher temperature accuracies can be achieved if the collector current, I_C, is controlled to react in accordance with and to compensate for the linearity error. Using this concept, practical circuits have been built in which allow these sensors to yield accuracies within ±0.1°C and ±0.01°C.

Reference: "Transistors–A Hot Tip for Accurate Temperature Sensing," Pat O'Neil and Carl Derrington, *Electronics 1979.*

6367255 0088913 382

TYPICAL CIRCUITS

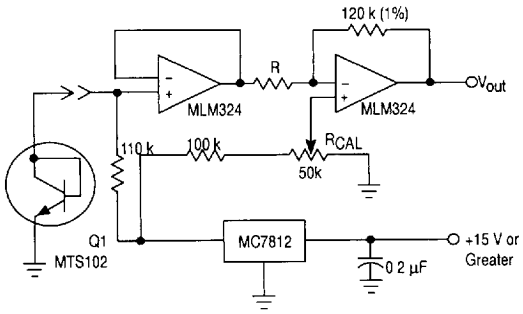

NOTE. With Q1 at a known temperature, adjust R_{CAL} to set output voltage to V_{out} = TEMP x 10 mV, Output of MTS102, 3, 5 is then converted to V_{out} = 10 mV/° – (°F, °C or °K)

R = 27 kΩ (1%) for °C or °K

Figure 6. Absolute Temperature Measurement

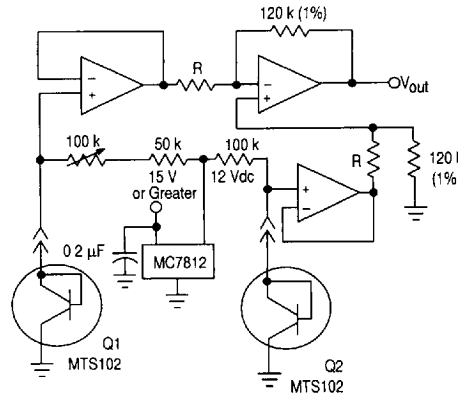

NOTE With Q1 and Q2 at identical temperature, adjust R_{CAL} for V_{out} = 0 000 V

R = 15 kΩ (1%) for °F

Figure 7. Differential Temperature Measurement 0 To 150°C

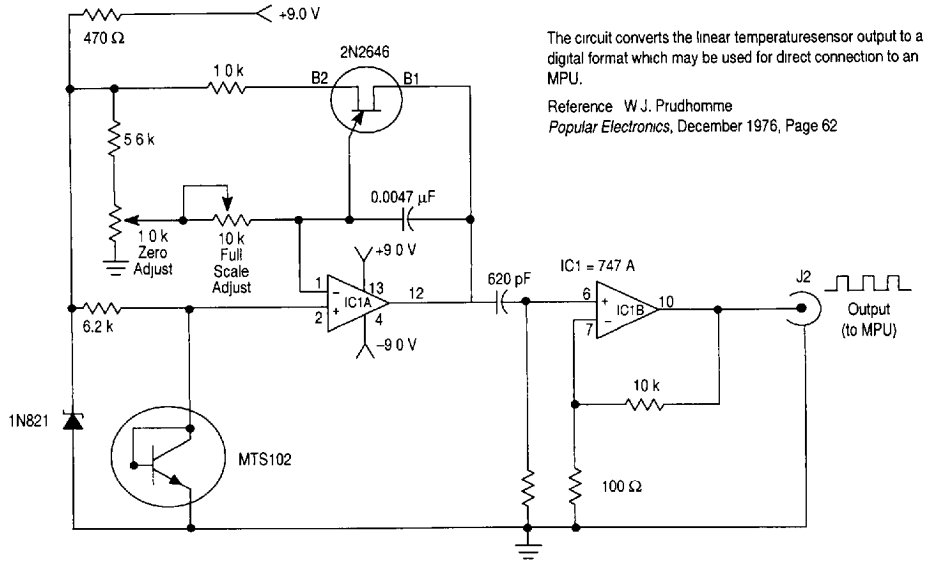

The circuit converts the linear temperaturesensor output to a digital format which may be used for direct connection to an MPU.

Reference W J. Prudhomme
Popular Electronics, December 1976, Page 62

All resistors are 10% 1/4 watt except 6.2 k which is 5% 1/4 watt

Figure 8. Temperature Sensor to Digital MPU Circuit

6367255 0088914 219