查询LM2931AZ33供应商 捷多邦，专业PCB打样工厂，24小时加急出货

LM2931 SERIES

VERY LOW DROP VOLTAGE REGULATOR WITH INHIBIT FUNCTION

- VERY LOW DROPOUT VOLTAGE (0.15V TYP. AT 10mA LOAD)
- LOW QUIESCENT CURRENT (TYP 2.5mA, AT 100mA LOAD)
- OUTPUT CURRENT UP TO 100mA
- ADJUSTABLE (FROM V_{OUT}=2.5V ONLY SO-8) AND FIXED (3.3V & 5V) OUTPUT VOLTAGE VERSION
- INTERNAL CURRENT AND THERMAL LIMIT
- LOAD DUMP PROTECTION UP TO 60V
- REVERSE TRANSIENT PROTECTION UP TO -50V
- TEMPERATURE RANGE: -40 TO 125 °C
- PACKAGE AVAILABLE: TO-92, DPAK, TO-220, SO-8 (WITH INHIBIT CONTROL)

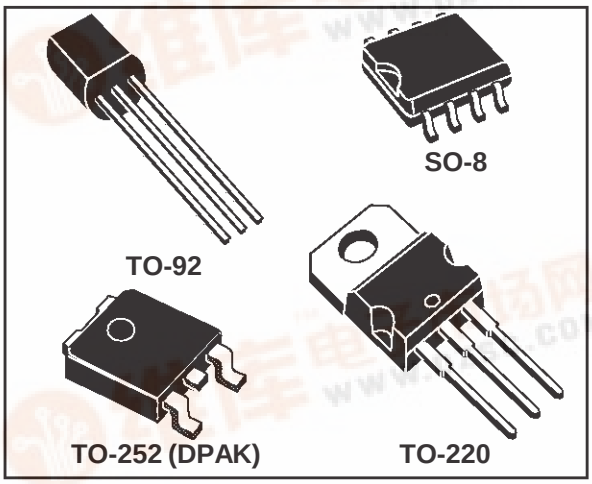

DESCRIPTION

The LM2931 series are very low drop regulators. The very low drop voltage and the low quiescent current make them particular suitable for low noise, low power applications and in battery powered systems. In the 8 pin configation (SO-8), fully compatible to the older L78L00 family, a shut down Logic Control function is available.

This means that when the device is used as a local regulator is possible to put a part of the board in stand-by decreasing the total power consumption. Ideal for automotive application the LM2931 is proteceted from reverse battery installations or 2 battery jumps. During the transient, suchs as a a load dump (60V) when the input voltage can exceed the specified maximum operating input voltage (26V), the regulator will automatically shut down to protect both internal circuit and the load.

BLOCK DIAGRAM

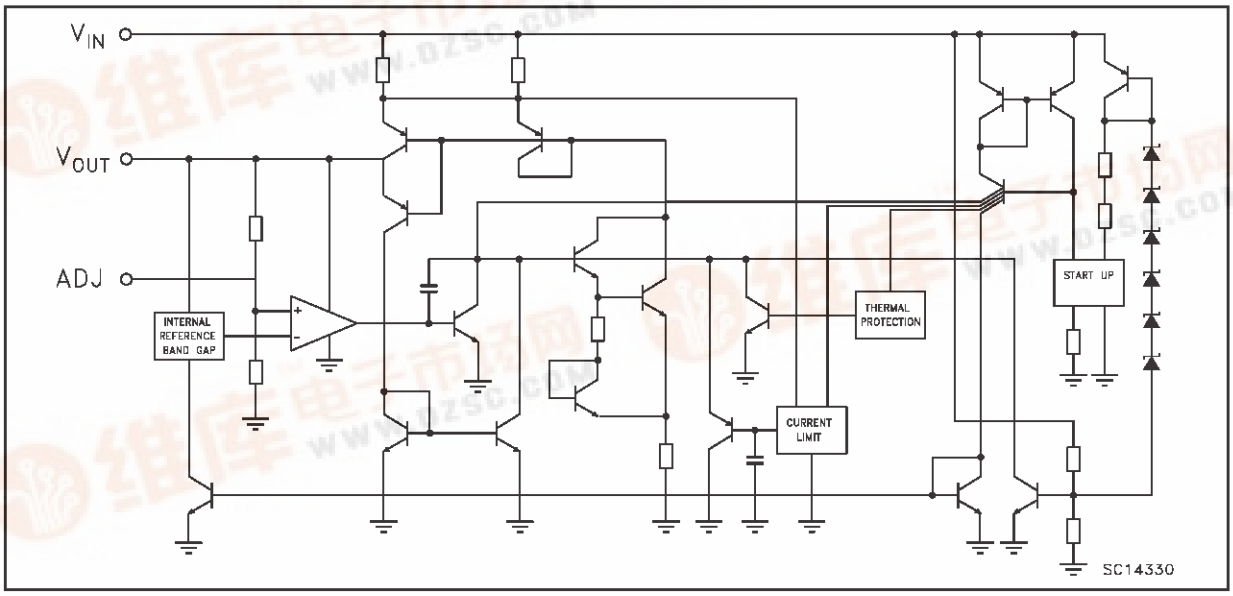

找PDF 维库一下 pdf.dzsc.com

ABSOLUTE MAXIMUM RATINGS

Symbol	Parameter	Value	Unit
V_{IN}	DC Positive Input Voltage	40	V
V_{IN}	DC Reverse Input Voltage	-15	V
V_{IN}	Transient Input Voltage (τ < 100ms)	60	V
V_{IN}	Transient Reverse Input Voltage (τ < 100ms)	-50	V
V_{INH}	Inhibit Input Voltage	40	V
I_{OUT}	Output Current	Internally Limited	mA
T_{stg}	Storage Temperature Range	-65 to 150	^{o}C
T_{op}	Operating Junction Temperature Range	-40 to 125	^{o}C

Absolute Maximum Ratings are those value beyond which damage to the device may occur. Functional operation under these condition is not implied.

CONNECTION DIAGRAM AND ORDERING NUMBERS (top view)

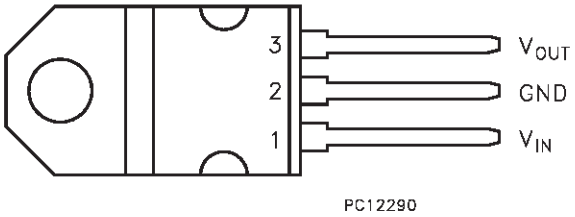

TO-220

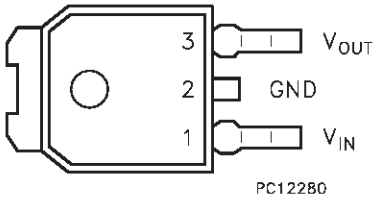

DPAK

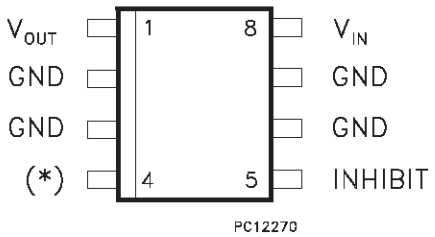

(*) = N.C. for FIXED and ADJ for ADJUSTABLE

SO-8

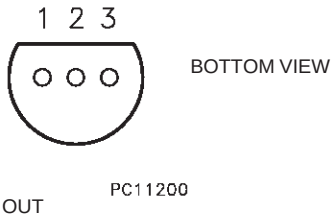

pin 1 = OUT
pin 2 = GND
pin 3 = IN

TO-92

TO-220	DPAK (*)	TO-92 (*)	SO-8 (*)	Output Voltage
LM2931AV33 LM2931BV33 LM2931AV50 LM2931BV50	LM2931ADT33 LM2931BDT33 LM2931ADT50 LM2931BDT50	LM2931AZ33 LM2931BZ33 LM2931AZ50 LM2931BZ50	LM2931AD33 LM2931BD33 LM2931AD50 LM2931BD50	3.3V 3.3V 5V 5V
			LM2931D	2.5V to 26V

(*) Available in Tape & Reel with the suffix "R" for fixed version and "-R" for adjustable version.

APPLICATION CIRCUIT FOR FIXED OUTPUT (Figure 1)

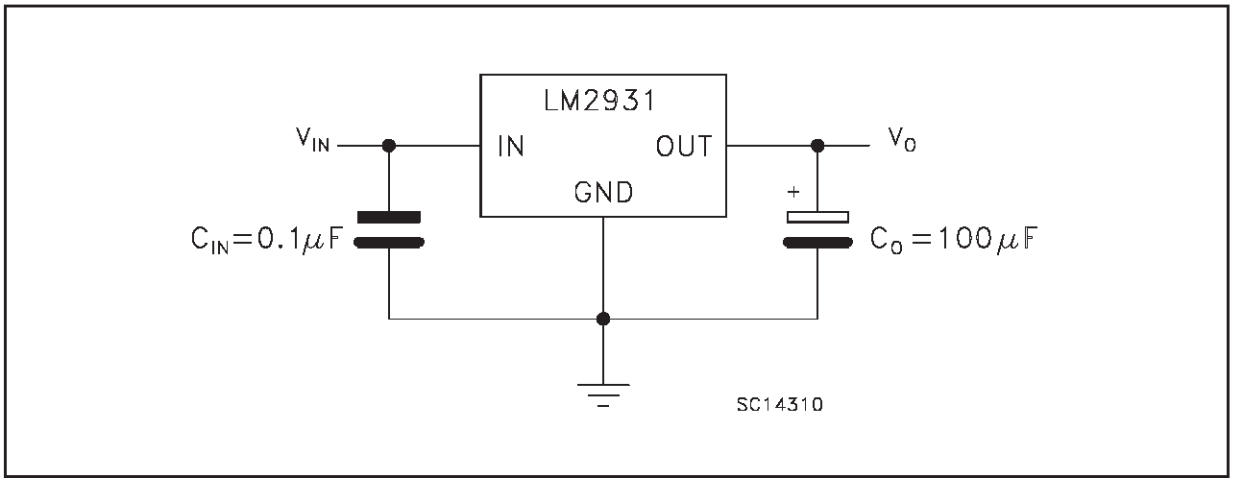

APPLICATION CIRCUIT FOR ADJUSTABLE OUTPUT (Figure 2)

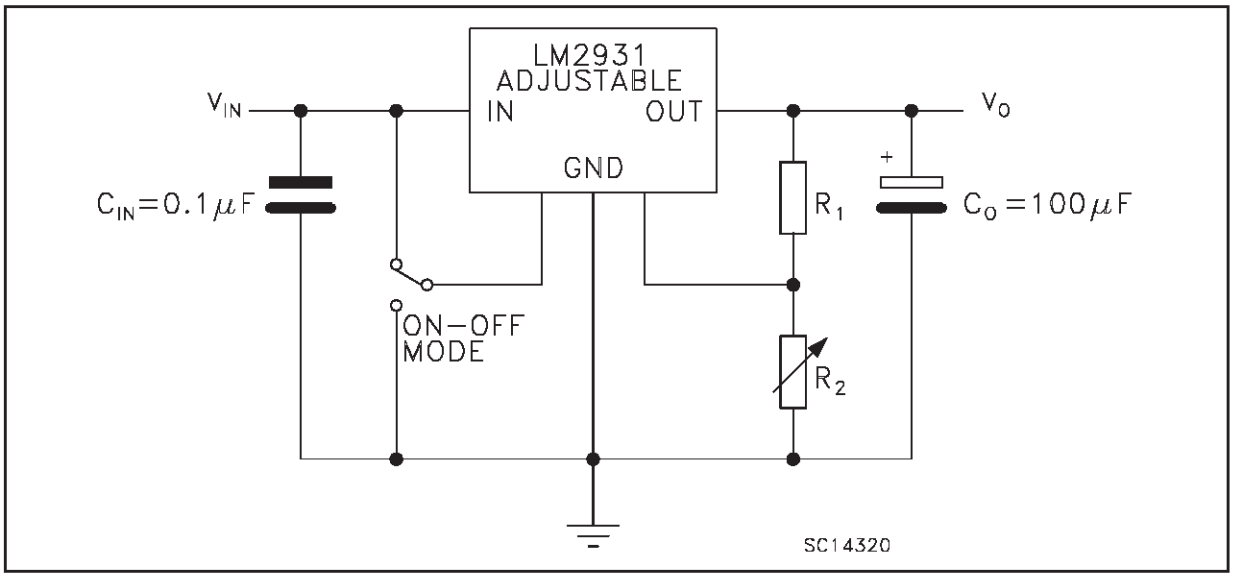

R_1 suggested Value = 27KΩ

$V_O = V_{REF} \times \frac{R_1 + R_2}{R_1}$

ELECTRICAL CHARACTERISTICS FOR LM2931A 3.3V (refer to the test circuits, T_j = 25 °C, V_{IN} = 14 V, C_{IN} = 0.1 µF, C_O = 100 µF, I_O = 10mA, V_{INH} = 0V unless otherwise specified)

Symbol	Parameter	Test Conditions	Min.	Typ.	Max.	Unit
V_I	Maximum Operating Input Voltage	I_O = 10 mA T_j = -40 to 125 °C	26	37		V
V_O	Output Voltage		3.175	3.3	3.425	V
V_O	Output Voltage	I_O = 100 mA V_{IN} = 6 to 26 V T_j = -40 to 125 °C	3.135	3.3	3.465	V
ΔV_O	Line Regulation	V_{IN} = 9 to 16 V		2	10	mV
ΔV_O	Line Regulation	V_{IN} = 6 to 26 V		4	33	mV
ΔV_O	Load Regulation	I_O = 5 to 100 mA		10	33	mV
V_d	Dropout Voltage (Note 1, 2)	I_O = 10 mA		90	250	mV
V_d	Dropout Voltage (Note 1, 2)	I_O = 100 mA		250	600	mV
I_d	Quiescent Current	ON Mode: I_{OUT} = 100mA		2.5	30	mA
I_d	Quiescent Current	OFF Mode: V_{INH} = 2.5 V R_{LOAD} = 330Ω		0.3	1	mA
I_{SC}	Short Circuit Current		100	300		mA
SVR	Supply Voltage Rejection	I_O = 100 mA V_{IN} = 14 ± 2V f = 120 Hz T_j = -40 to 125 °C	55	78		dB
V_{IL}	Control Input Voltage	T_j = -40 to 125 °C		2	1.2	V
V_{IH}	Control Input Voltage	T_j = -40 to 125 °C	3.25	2		V
I_{INH}	Inhibit Input Current	V_{INH} = 2.5 V		22	50	µA
V_{IN}	Transient Input Voltage	R_{LOAD} = 330Ω τ < 100ms	60	70		V
V_{IN}	Reverse Polarity Input Voltage	V_O ± 0.3V R_{LOAD} = 330Ω	-15	-50		V
V_{IN}	Reverse Polarity Input Voltage Transient	R_{LOAD} = 330Ω τ < 100ms	-50			V
eN	Output Noise Voltage	B = 10Hz to 100KHz		330		μV_{RMS}

Note 1: Reference Voltage is measured from V_{OUT} to AJD pin.
Note 2: V_d measured when the output voltage has dropped 100mV from the nominal value obtained at 14V.

ELECTRICAL CHARACTERISTICS FOR LM2931B 3.3V (refer to the test circuits, T_j = 25 °C, V_{IN} = 14 V, C_{IN} = 0.1 µF, C_O = 100 µF, I_O = 10mA, V_{INH} = 0V unless otherwise specified)

Symbol	Parameter	Test Conditions	Min.	Typ.	Max.	Unit
V_I	Maximum Operating Input Voltage	I_O = 10 mA T_j = -40 to 125 °C	26	37		V
V_O	Output Voltage		3.135	3.3	3.465	V
V_O	Output Voltage	I_O = 100 mA V_{IN} = 6 to 26 V T_j = -40 to 125 °C	2.97	3.3	3.63	V
ΔV_O	Line Regulation	V_{IN} = 9 to 16 V		2	10	mV
ΔV_O	Line Regulation	V_{IN} = 6 to 26 V		4	33	mV
ΔV_O	Load Regulation	I_O = 5 to 100 mA		10	33	mV
V_d	Dropout Voltage (Note 1, 2)	I_O = 10 mA		90	200	mV
V_d	Dropout Voltage (Note 1, 2)	I_O = 100 mA		250	600	mV
I_d	Quiescent Current	ON Mode: I_{OUT} = 100mA		2.5	30	mA
I_d	Quiescent Current	OFF Mode: V_{INH} = 2.5 V R_{LOAD} = 330Ω		0.3	1	mA
I_{SC}	Short Circuit Current		100	300		mA
SVR	Supply Voltage Rejection	I_O = 100 mA V_{IN} = 14 ± 2V f = 120 Hz T_j = -40 to 125 °C	55	78		dB
V_{IL}	Control Input Voltage	T_j = -40 to 125 °C		2	1.2	V
V_{IH}	Control Input Voltage	T_j = -40 to 125 °C	3.25	2		V
I_{INH}	Inhibit Input Current	V_{INH} = 2.5 V		22	50	µA
V_{IN}	Transient Input Voltage	R_{LOAD} = 330Ω τ < 100ms	60	70		V
V_{IN}	Reverse Polarity Input Voltage	V_O ± 0.3V R_{LOAD} = 330Ω	-15	-50		V
V_{IN}	Reverse Polarity Input Voltage Transient	R_{LOAD} = 330Ω τ < 100ms	-50			V
eN	Output Noise Voltage	B = 10Hz to 100KHz		330		μV_{RMS}

Note 1: Reference Voltage is measured from V_{OUT} to AJD pin.
Note 2: V_d measured when the output voltage has dropped 100mV from the nominal value obtained at 14V.

ELECTRICAL CHARACTERISTICS FOR LM2931A 5V (refer to the test circuits, T_j = 25 °C, V_{IN} = 14 V, C_{IN} = 0.1 µF, C_O = 100 µF, I_O = 10mA, V_{INH} = 0V unless otherwise specified)

Symbol	Parameter	Test Conditions	Min.	Typ.	Max.	Unit
V_I	Maximum Operating Input Voltage	I_O = 10 mA T_j = -40 to 125 °C	26	37		V
V_O	Output Voltage		4.81	5	5.19	V
V_O	Output Voltage	I_O = 100 mA V_{IN} = 6 to 26 V T_j = -40 to 125 °C	4.75	5	5.25	V
ΔV_O	Line Regulation	V_{IN} = 9 to 16 V		2	10	mV
ΔV_O	Line Regulation	V_{IN} = 6 to 26 V		4	30	mV
ΔV_O	Load Regulation	I_O = 5 to 100 mA		15	50	mV
V_d	Dropout Voltage (Note 1, 2)	I_O = 10 mA		90	200	mV
V_d	Dropout Voltage (Note 1, 2)	I_O = 100 mA		250	600	mV
I_d	Quiescent Current	ON Mode: I_{OUT} = 100mA		2.5	30	mA
I_d	Quiescent Current	OFF Mode: V_{INH} = 2.5 V R_{LOAD} = 500Ω		0.3	1	mA
I_{SC}	Short Circuit Current		100	300		mA
SVR	Supply Voltage Rejection	I_O = 100 mA V_{IN} = 14 ± 2V f = 120 Hz T_j = -40 to 125 °C	55	75		dB
V_{IL}	Control Input Voltage	T_j = -40 to 125 °C		2	1.2	V
V_{IH}	Control Input Voltage	T_j = -40 to 125 °C	3.25	2		V
I_{INH}	Inhibit Input Current	V_{INH} = 2.5 V		22	50	µA
V_{IN}	Transient Input Voltage	R_{LOAD} = 500Ω τ < 100ms	60	70		V
V_{IN}	Reverse Polarity Input Voltage	V_O ± 0.3V R_{LOAD} = 500Ω	-15	-50		V
V_{IN}	Reverse Polarity Input Voltage Transient	R_{LOAD} = 500Ω τ < 100ms	-50			V
eN	Output Noise Voltage	B = 10Hz to 100KHz		500		μV_{RMS}

Note 1: Reference Voltage is measured from V_{OUT} to AJD pin.
Note 2: V_d measured when the output voltage has dropped 100mV from the nominal value obtained at 14V.

ELECTRICAL CHARACTERISTICS FOR LM2931B 5V (refer to the test circuits, T_j = 25 °C, V_{IN} = 14 V, C_{IN} = 0.1 µF, C_O = 100 µF, I_O = 10mA, V_{INH} = 0V unless otherwise specified)

Symbol	Parameter	Test Conditions	Min.	Typ.	Max.	Unit
V_I	Maximum Operating Input Voltage	I_O = 10 mA T_j = -40 to 125 °C	26	37		V
V_O	Output Voltage		4.75	5	5.25	V
V_O	Output Voltage	I_O = 100 mA V_{IN} = 6 to 26 V T_j = -40 to 125 °C	4.5	5	5.5	V
ΔV_O	Line Regulation	V_{IN} = 9 to 16 V		2	10	mV
ΔV_O	Line Regulation	V_{IN} = 6 to 26 V		4	30	mV
ΔV_O	Load Regulation	I_O = 5 to 100 mA		15	50	mV
V_d	Dropout Voltage (Note 1, 2)	I_O = 10 mA		90	200	mV
V_d	Dropout Voltage (Note 1, 2)	I_O = 100 mA		250	600	mV
I_d	Quiescent Current	ON Mode: I_{OUT} = 100mA		2.5	30	mA
I_d	Quiescent Current	OFF Mode: V_{INH} = 2.5 V R_{LOAD} = 330Ω		0.3	1	mA
I_{SC}	Short Circuit Current		100	300		mA
SVR	Supply Voltage Rejection	I_O = 100 mA V_{IN} = 14 ± 2V f = 120 Hz T_j = -40 to 125 °C	55	75		dB
V_{IL}	Control Input Voltage	T_j = -40 to 125 °C		2	1.2	V
V_{IH}	Control Input Voltage	T_j = -40 to 125 °C	3.25	2		V
I_{INH}	Inhibit Input Current	V_{INH} = 2.5 V		22	50	µA
V_{IN}	Transient Input Voltage	R_{LOAD} = 500Ω τ < 100ms	60	70		V
V_{IN}	Reverse Polarity Input Voltage	V_O ± 0.3V R_{LOAD} = 500Ω	-15	-50		V
V_{IN}	Reverse Polarity Input Voltage Transient	R_{LOAD} = 500Ω τ < 100ms	-50			V
eN	Output Noise Voltage	B = 10Hz to 100KHz		500		μV_{RMS}

Note 1: Reference Voltage is measured from V_{OUT} to AJD pin.
Note 2: V_d measured when the output voltage has dropped 100mV from the nominal value obtained at 14V.

ELECTRICAL CHARACTERISTICS FOR LM2931ADJ (refer to the test circuits figure 2 with R_1 =27KΩ and R_2 =40.5KΩ, T_j = 25 °C, V_{IN} = 14 V, C_{IN} = 0.1 µF, C_O = 100 µF, I_O = 10mA, V_{INH} = 0V unless otherwise specified)

Symbol	Parameter	Test Conditions	Min.	Typ.	Max.	Unit
V_I	Maximum Operating Input Voltage	I_O = 10 mA T_j = -40 to 125 °C	26	37		V
V_{REF}	Reference Voltage(Note 1)		1.14	1.2	1.26	V
V_{REF}	Reference Voltage(Note 1)	I_O = 100 mA T_j = -40 to 125 °C	1.08	1.2	1.32	V
ΔV_O	Line Regulation	V_{IN} = 3.6 to 26 V		0.6	4.5	mV
ΔV_O	Load Regulation	I_O = 5 to 100 mA		9	30	mV
V_d	Dropout Voltage (Note 1, 2)	I_O = 10 mA		90	200	mV
V_d	Dropout Voltage (Note 1, 2)	I_O = 100 mA		250	600	mV
I_d	Quiescent Current	ON Mode: I_{OUT} = 100mA		2.5	30	mA
I_d	Quiescent Current	OFF Mode: V_{INH} = 2.5 V R_{LOAD} = 300Ω		0.3	1	mA
I_{SC}	Short Circuit Current		100	300		mA
SVR	Supply Voltage Rejection	I_O = 100 mA V_{IN} = 14 ± 2V f = 120 Hz T_j = -40 to 125 °C	55	80		dB
V_{IL}	Control Input Voltage	T_j = -40 to 125 °C		2	1.2	V
V_{IH}	Control Input Voltage	T_j = -40 to 125 °C	3.25	2		V
I_{INH}	Inhibit Input Current	V_{INH} = 2.5 V		22	50	µA
V_{IN}	Transient Input Voltage	R_{LOAD} = 300Ω τ < 100ms	60	70		V
V_{IN}	Reverse Polarity Input Voltage	V_O ± 0.3V R_{LOAD} = 300Ω	-15	-50		V
V_{IN}	Reverse Polarity Input Voltage Transient	R_{LOAD} = 300Ω τ < 100ms	-50			V
eN	Output Noise Voltage	B = 10Hz to 100KHz		330		μV_{RMS}

Note 1: Reference Voltage is measured from V_{OUT} to AJD pin.
Note 2: V_d measured when the output voltage has dropped 100mV from the nominal value obtained at 14V.

TYPICAL CHARACTERISTICS (unless otherwise specified C_{IN}=0.1µF, C_O=100µF)

Output Voltage vs Temperature

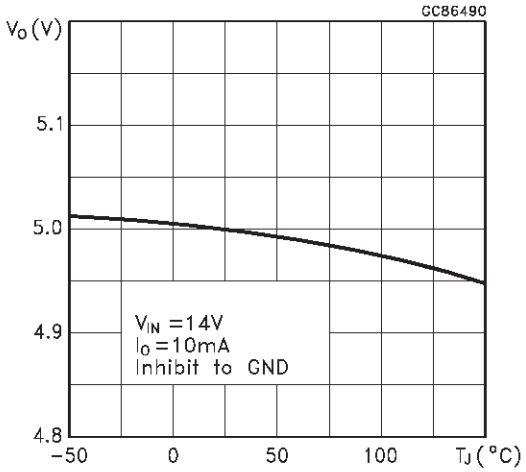

Output Voltage vs Temperature

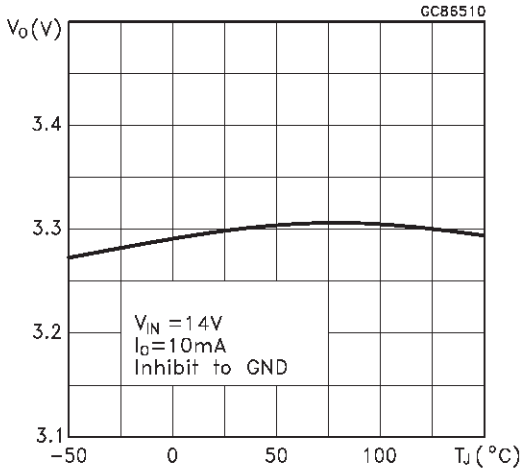

Referece Voltage vs Temperature

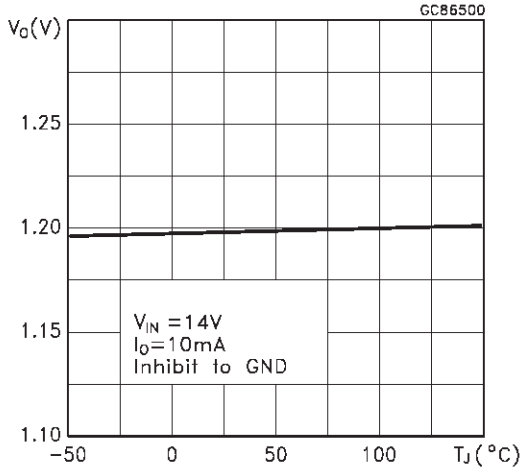

Line Regulation vs Temperature

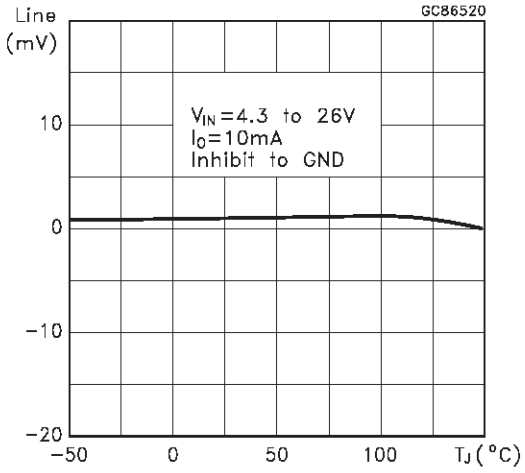

Load Regulation vs Temperature

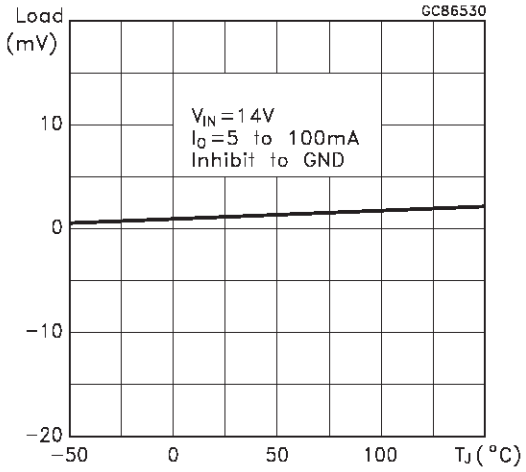

Dropout Voltage vs Temperature

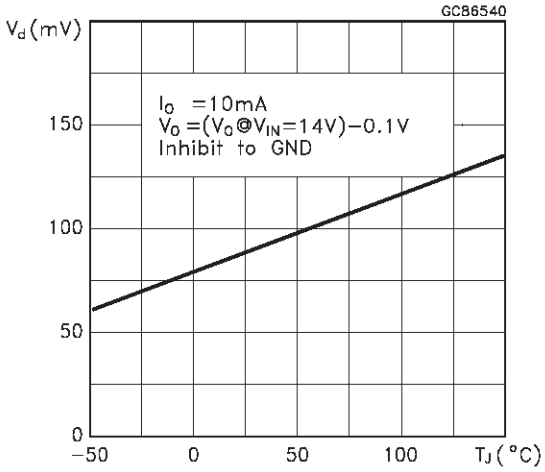

TYPICAL CHARACTERISTICS (Continued)

Dropout Voltage vs Temperature

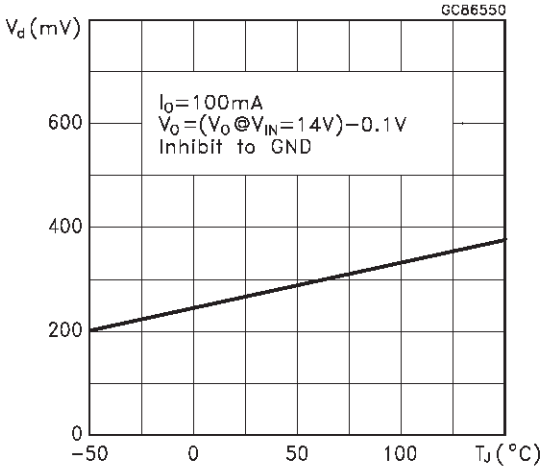

Dropout Voltage vs Output Current

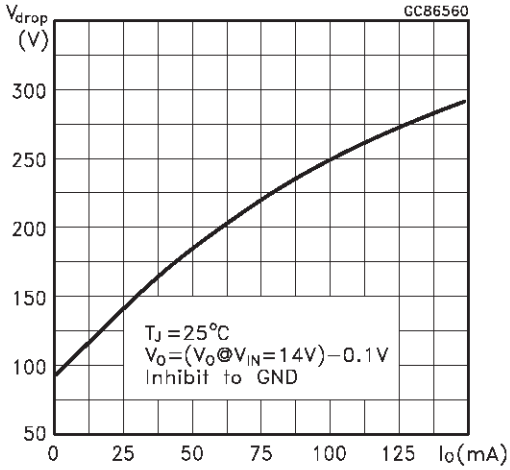

Output Voltage vs Input Voltage

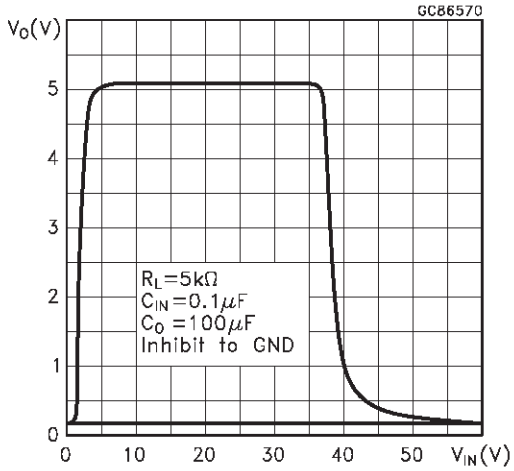

Short Circuit Current vs Drop Voltage

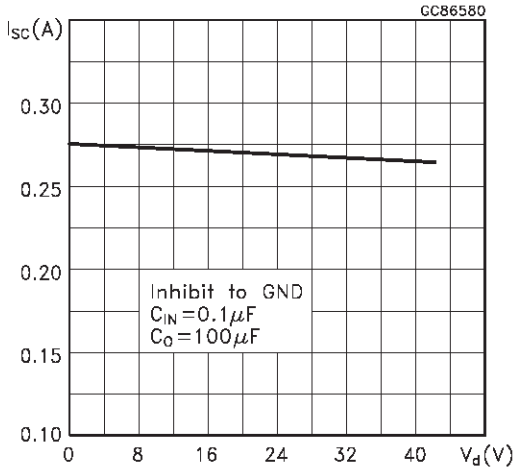

Quiescent Current vs Temperature

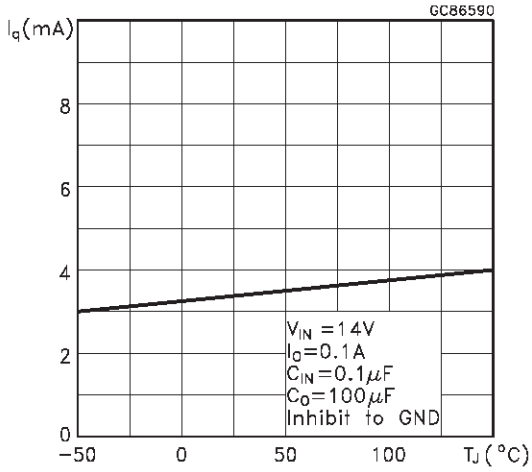

Quiescent Current vs Input Voltage

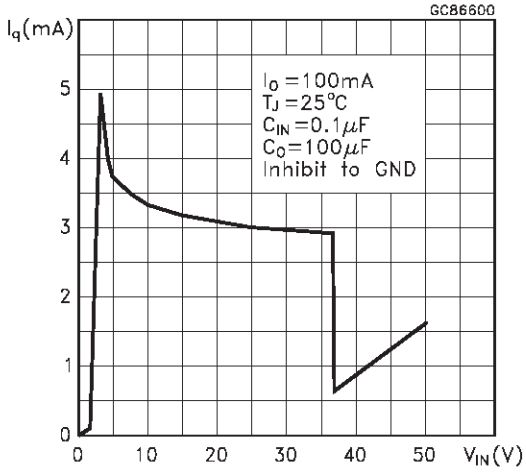

TYPICAL CHARACTERISTICS (Continued)

Quiescent Current vs Output Current

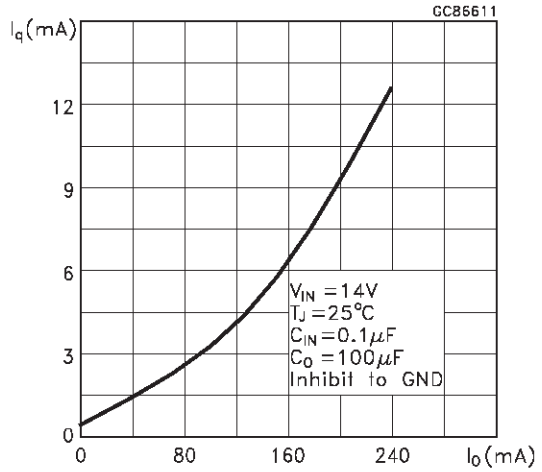

Supply Voltage Rejection vs Temperature

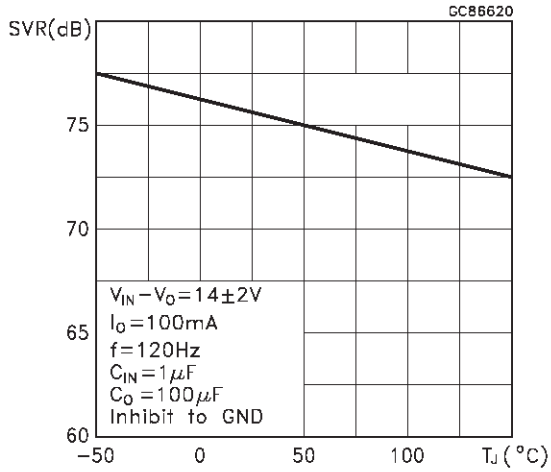

Supply Voltage Rejection vs Frequency

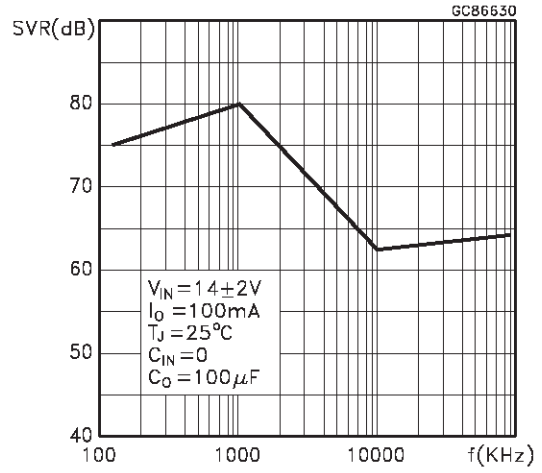

Supply Voltage Rejection vs Output Current

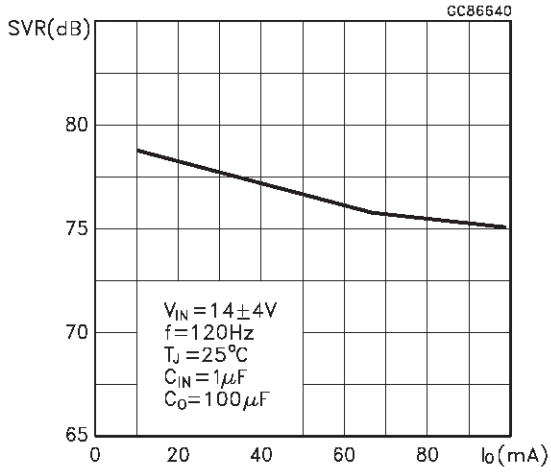

Line Transient

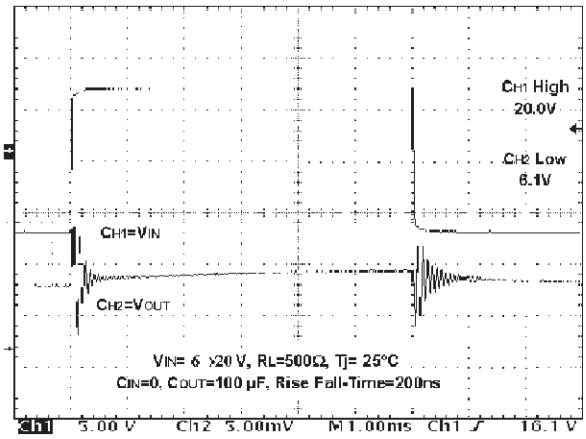

Load Transient

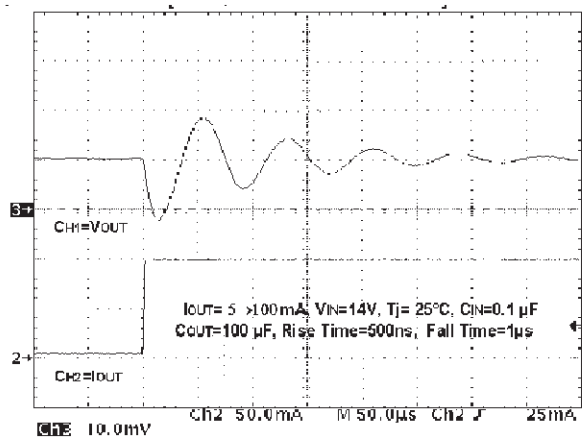

TO-220 MECHANICAL DATA

DIM.	mm			inch		
	MIN.	TYP.	MAX.	MIN.	TYP.	MAX.
A	4.40		4.60	0.173		0.181
C	1.23		1.32	0.048		0.051
D	2.40		2.72	0.094		0.107
D1		1.27			0.050	
E	0.49		0.70	0.019		0.027
F	0.61		0.88	0.024		0.034
F1	1.14		1.70	0.044		0.067
F2	1.14		1.70	0.044		0.067
G	4.95		5.15	0.194		0.203
G1	2.4		2.7	0.094		0.106
H2	10.0		10.40	0.393		0.409
L2		16.4			0.645	
L4	13.0		14.0	0.511		0.551
L5	2.65		2.95	0.104		0.116
L6	15.25		15.75	0.600		0.620
L7	6.2		6.6	0.244		0.260
L9	3.5		3.93	0.137		0.154
DIA.	3.75		3.85	0.147		0.151

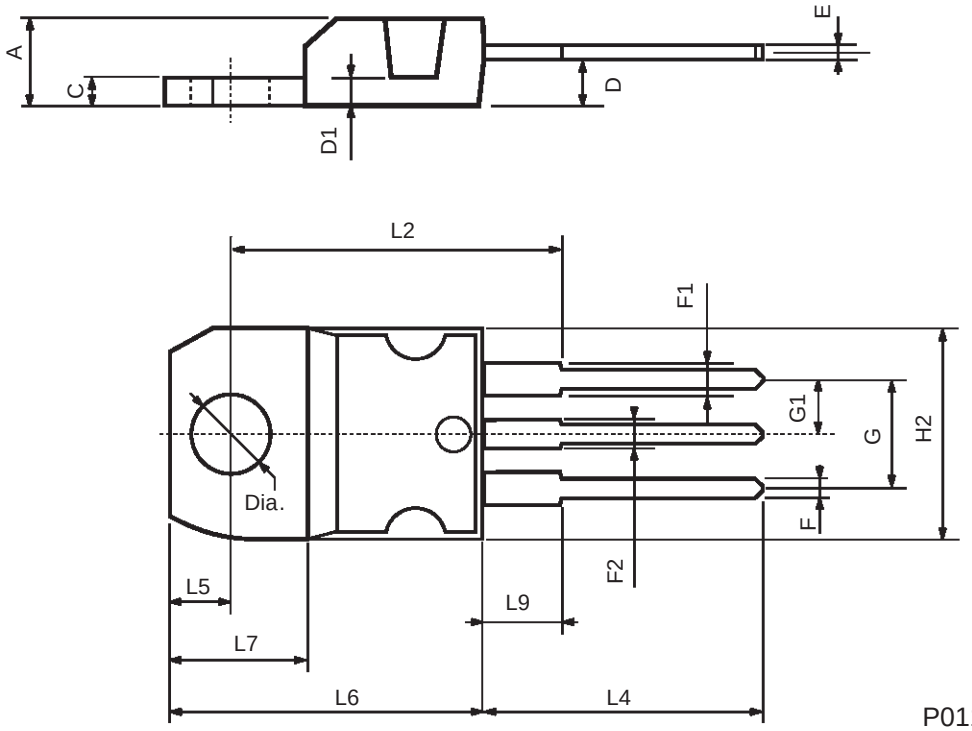

TO-252 (DPAK) MECHANICAL DATA

DIM.	mm			inch		
	MIN.	TYP.	MAX.	MIN.	TYP.	MAX.
A	2.2		2.4	0.086		0.094
A1	0.9		1.1	0.035		0.043
A2	0.03		0.23	0.001		0.009
B	0.64		0.9	0.025		0.035
B2	5.2		5.4	0.204		0.212
C	0.45		0.6	0.017		0.023
C2	0.48		0.6	0.019		0.023
D	6		6.2	0.236		0.244
E	6.4		6.6	0.252		0.260
G	4.4		4.6	0.173		0.181
H	9.35		10.1	0.368		0.397
L2		0.8			0.031	
L4	0.6		1	0.023		0.039

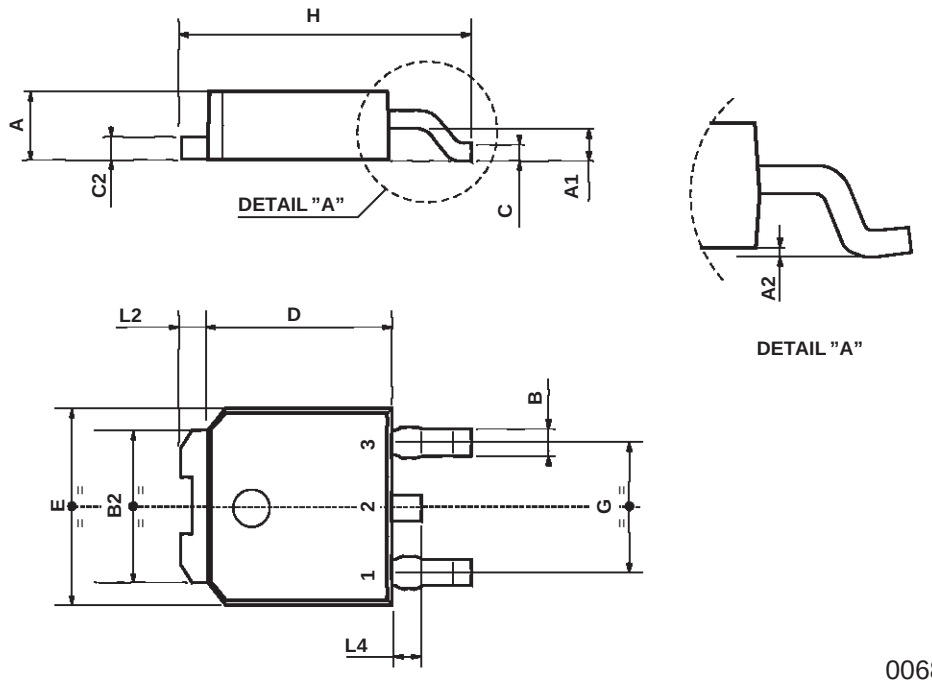

0068772-B

SO-8 MECHANICAL DATA

DIM.	mm			inch		
	MIN.	TYP.	MAX.	MIN.	TYP.	MAX.
A			1.75			0.068
a1	0.1		0.25	0.003		0.009
a2			1.65			0.064
a3	0.65		0.85	0.025		0.033
b	0.35		0.48	0.013		0.018
b1	0.19		0.25	0.007		0.010
C	0.25		0.5	0.010		0.019
c1	45 (typ.)					
D	4.8		5.0	0.188		0.196
E	5.8		6.2	0.228		0.244
e		1.27			0.050	
e3		3.81			0.150	
F	3.8		4.0	0.14		0.157
L	0.4		1.27	0.015		0.050
M			0.6			0.023
S	8 (max.)					

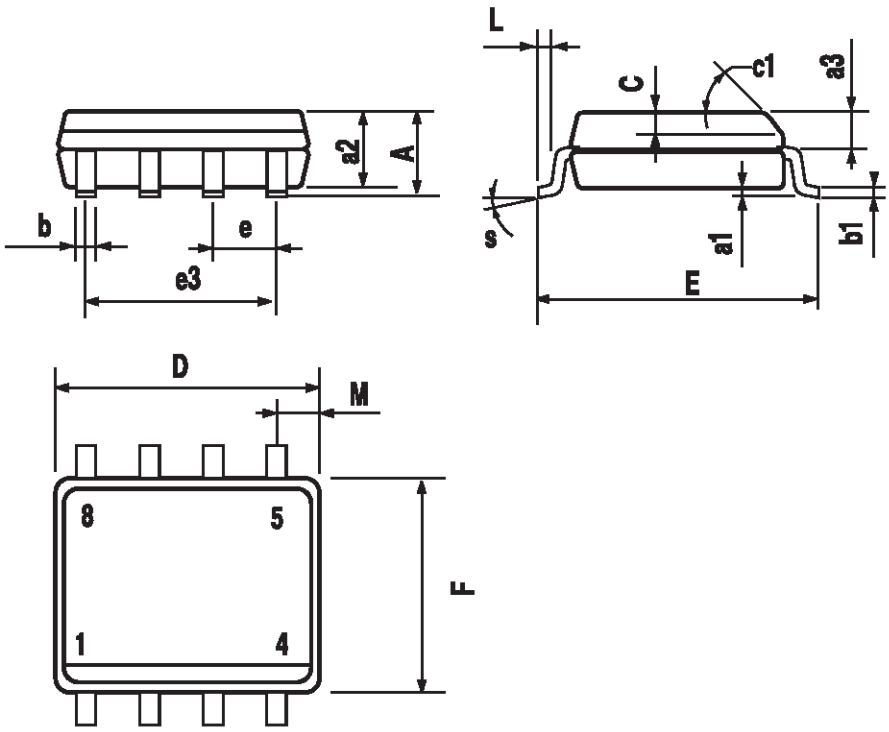

0016023

TO-92 MECHANICAL DATA

DIM.	mm			inch		
	MIN.	TYP.	MAX.	MIN.	TYP.	MAX.
A	4.58		5.33	0.180		0.210
B	4.45		5.2	0.175		0.204
C	3.2		4.2	0.126		0.165
D	12.7			0.500		
E		1.27			0.050	
F	0.4		0.51	0.016		0.020
G	0.35			0.14		

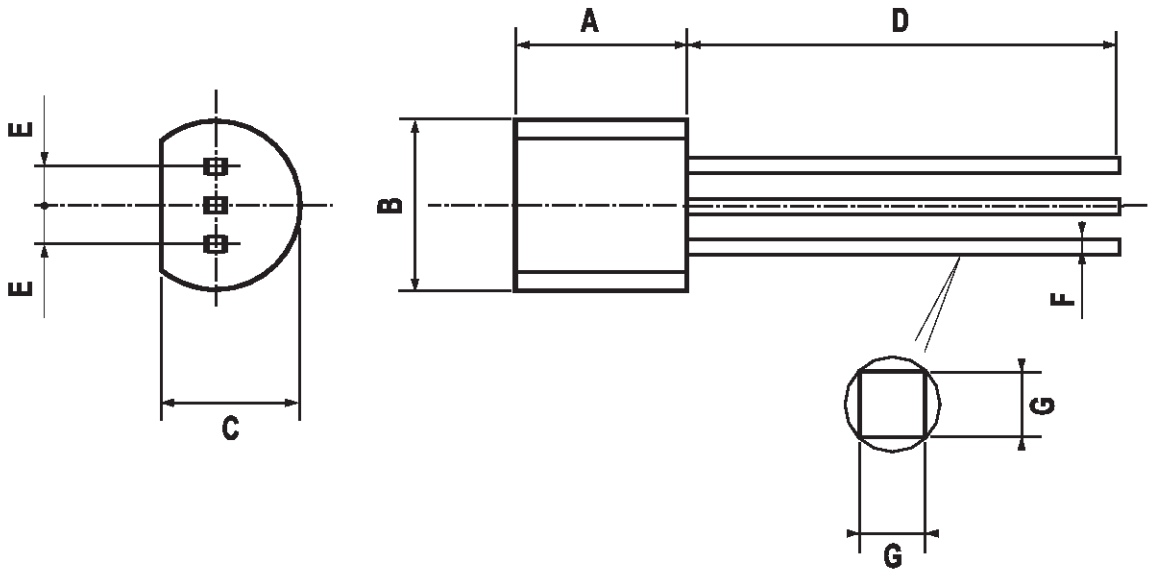

Information furnished is believed to be accurate and reliable. However, STMicroelectronics assumes no responsibility for the consequences of use of such information nor for any infringement of patents or other rights of third parties which may result from its use. No license is granted by implication or otherwise under any patent or patent rights of STMicroelectronics. Specification mentioned in this publication are subject to change without notice. This publication supersedes and replaces all information previously supplied. STMicroelectronics products are not authorized for use as critical components in life support devices or systems without express written approval of STMicroelectronics.

The ST logo is a registered trademark of STMicroelectronics

© 2000 STMicroelectronics – Printed in Italy – All Rights Reserved

STMicroelectronics GROUP OF COMPANIES

Australia - Brazil - China - Finland - France - Germany - Hong Kong - India - Italy - Japan - Malaysia - Malta - Morocco
Singapore - Spain - Sweden - Switzerland - United Kingdom - U.S.A.

http://www.st.com