BA4112 FM-IF detector

The BA4112 IC is a narrow band FM-IF detection IC that is designed to be used in FM transceivers.

Features

- available in a DIP16 package that is compatible with Motorola part no. MC3357P
- low power consumption (typically 3.0 mA)
- limiting sensitivity is typically –3 dB at 5.0 µV
- circuit between 2nd mixer and detector output requires few external components, which allows smaller transceiver sizes

Applications

- VHF-band FM transceivers
- cordless telephones

Dimensions (Units : mm)

BA4112 (DIP16)

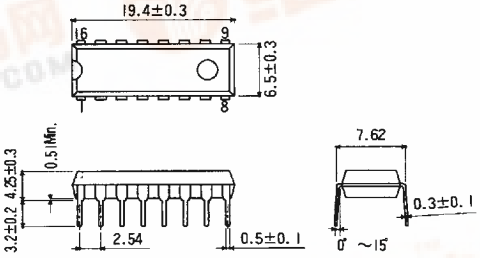

Block diagram

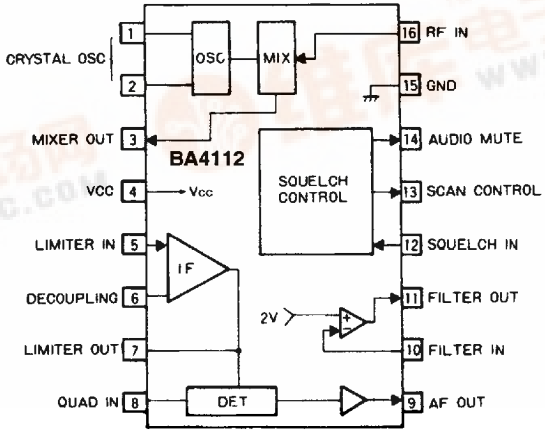

Absolute maximum ratings (T_a = 25°C)

Parameter	Symbol	Limits	Unit	Conditions
Power supply voltage	V_{CC}	12	V	
Power dissipation	P_d	500	mW	Reduce power by 5 mW/°C for each degree above 25°C.
Operating temperature	T_{opr}	−10 ~ +60	°C	
Storage temperature	T_{stg}	−25 ~ +75	°C	

Electrical characteristics (unless otherwise noted, T_a = 25°C, V_{CC} = 6.0 V, f_{IN} = 10.7 MHz, Δf = ±3 kHz, f_m = 1 kHz)

Parameter	Symbol	Min	Typical	Max	Unit	Conditions
Quiescent current	I_Q	2.0	3.0	5.0	mA	No signal, squelch on
20 dB signal/noise sensitivity	20 dB S/N	15	−20	25	dBμV	
Detector output level	V_{ODC}	250	350	500	mV	V_{IN} = 80 dBμV
Detector output distortion	THD		1.8	3.0	%	V_{IN} = 80 dBμV
Detector output DC voltage	V_{ODC}	2.0	3.0	4.0	V	V_{IN} = 0 V
Detector output impedance	Z_{OUT}	280	400	520	Ω	
Filter amplifier gain	G_V	41	46		dB	V_{IN} = 1 mV 10 kHz
Filter output DC voltage	V_{ODC-f}	1.5	2.0	2.5	V	
Squelch hysteresis	Hys	50	100	150	mV	
Mute low resistance	R_mL		10	50	Ω	V_{12} = GND
Mute high resistance	R_mH	1.0	10		MΩ	V_{12} = 2.0 V
Scan low voltage	$V_{Sc}L$		0	0.5	V	V_{12} = 2.0 V
Scan high voltage	$V_{Sc}H$	3.0	5.0	5.9	V	V_{12} = GND
Mixer conversion gain	Avm	17	20		dB	f_{IN} = 10.7 MHz

Note: For the test circuit, see Figure 1

Figure 1 Test circuit

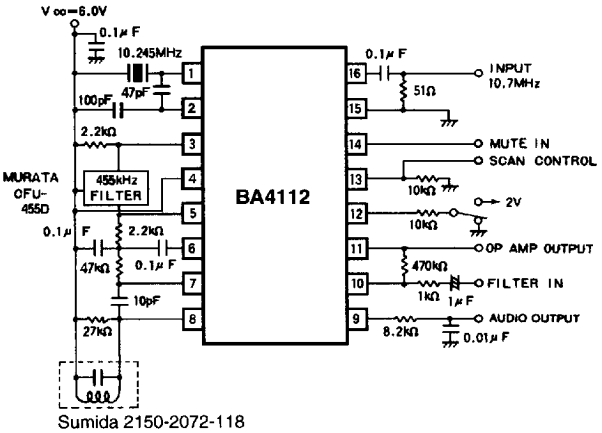

Figure 2 Application example