查询TA8210H供应商 捷多邦，专业PCB打样工厂，24小时加急出货



TOSHIBA BIPOLAR LINEAR INTEGRATED CIRCUIT SILICON MONOLITHIC

# TA8210AH, TA8210AL

## 20W BTL×2CH AUDIO POWER AMPLIFIER

The thermal resistance θj-T of TA8210AH, TA8210AL package designed for low thermal resistance, has a high efficiency of heat radiation.
The temperature rise of chip can be reduced, and the influence from the degradation of the features due to the temperature rise at the high output can also be reduced.
This stereo audio power IC, designed for car audio use, has two built-in channels to reduce the characteristic difference between L and R channels.
In addition, the functions of stand-by and muting, and a variety of protection circuits are involved.

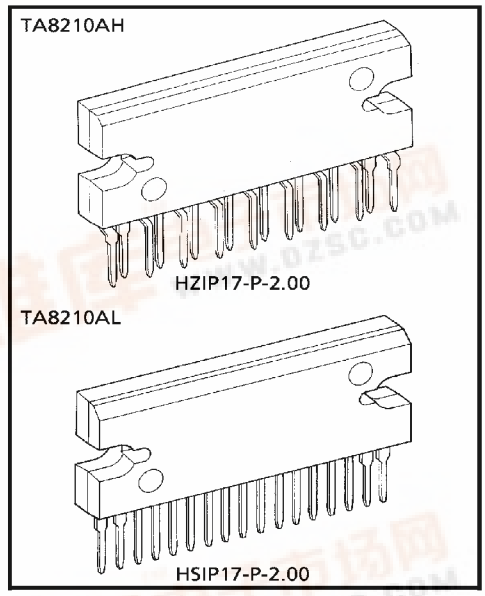


Weight
HZIP17-P-2.00 : 9.8g (Typ.)
HSIP17-P-2.00 : 9.8g (Typ.)

### FEATURES

- Low Thermal Resistance
  : θj-T = 1.5°C / W (Infinite Heat Sink)
- High Power
  : $P_{OUT}$ (1) = 22W (Typ.) / Channel
  ($V_{CC}$ = 14.4V, f = 1kHz, THD = 10%, $R_L$ = 4Ω)
  $P_{OUT}$ (2) = 19W (Typ.) / Channel
  ($V_{CC}$ = 13.2V, f = 1kHz, THD = 10%, $R_L$ = 4Ω)
- Low Distortion Ratio : THD = 0.04% (Typ.) ($V_{CC}$ = 13.2V, f = 1kHz, $P_{OUT}$ = 1W, $R_L$ = 4Ω, $G_V$ = 50dB)
- Low Noise : $V_{NO}$ = 0.30$mV_{rms}$ (Typ.) ($V_{CC}$ = 13.2V, $R_L$ = 4Ω, $G_V$ = 50dB, $R_g$ = 0Ω, BW = 20Hz~20kHz)
- Built-in Stand-by Function (With pin④ set a LOW, power is turned OFF.) : $I_{SB}$ = 1μA (Typ.)
- Built-in Muting Function (With pin① set at LOW, power is turned OFF.) : $V_{(Mute)}$ = 1V (Typ.)
- Built-in Various Protection Circuits
  Protection circuits : Thermal Shut Down, over voltage, out→$V_{CC}$ short, out→GND short and OUT-OUT Short.
- Operating Supply Voltage : $V_{CC}$ = 9~18V

980508EBA2


- TOSHIBA is continually working to improve the quality and the reliability of its products. Nevertheless, semiconductor devices in general can malfunction or fail due to their inherent electrical sensitivity and vulnerability to physical stress. It is the responsibility of the buyer, when utilizing TOSHIBA products, to observe standards of safety, and to avoid situations in which a malfunction or failure of a TOSHIBA product could cause loss of human life, bodily injury or damage to property. In developing your designs, please ensure that TOSHIBA products are used within specified operating ranges as set forth in the most recent products specifications. Also, please keep in mind the precautions and conditions set forth in the TOSHIBA Semiconductor Reliability Handbook.
- The products described in this document are subject to foreign exchange and foreign trade laws.
- The information contained herein is presented only as a guide for the applications of our products. No responsibility is assumed by TOSHIBA CORPORATION for any infringements of intellectual property or other rights of the third parties which may result from its use. No license is granted by implication or otherwise under any intellectual property or other rights of TOSHIBA CORPORATION or others.
- The information contained herein is subject to change without notice.




找PDF 维库一下 pdf.dzsc.com

## BLOCK DIAGRAM

TA8210AH, TA8210AL ($G_V$ = 50dB)

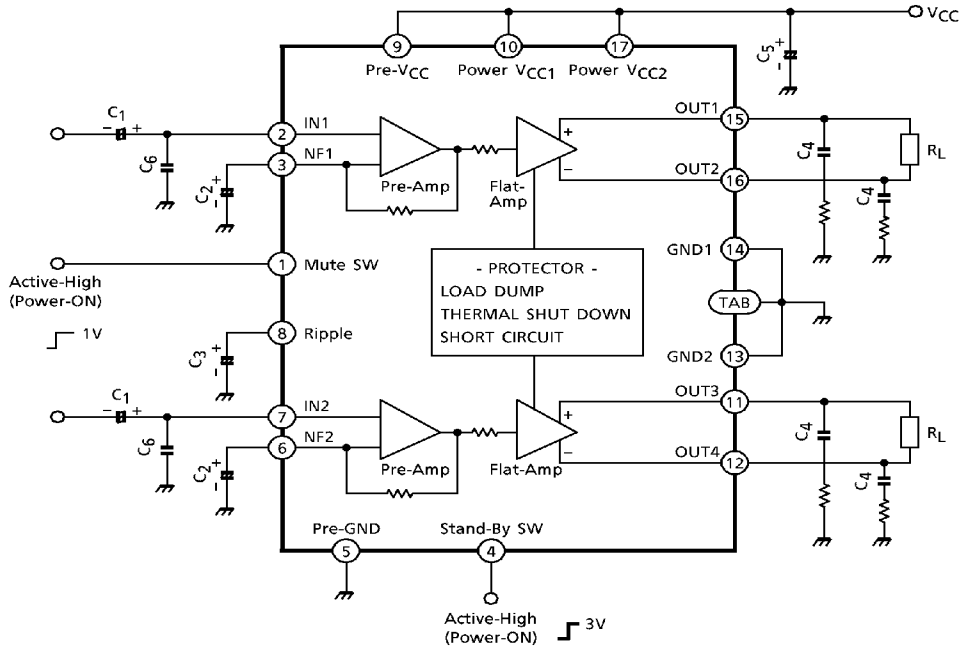


## CAUTIONS AND APPLICATION METHOD

(Description is made only on the single channel.)

1. Voltage gain adjustment

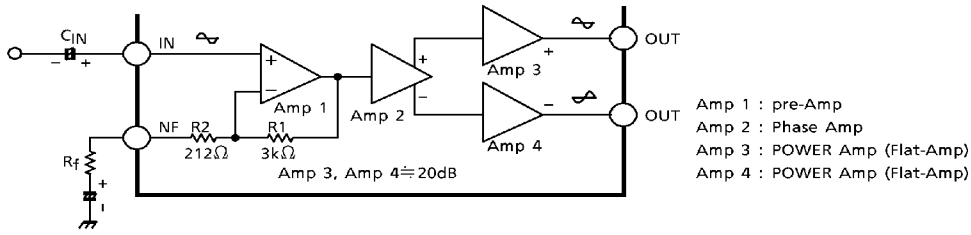


Fig.1

This IC has the amplifier construction as shown in Fig.1. The Pre-Amp (Amp 1) is provided to the primary stage, and the input voltage is amplified by the Flat Amps, Amp 3 and Amp 4 of each channel through the phase Amp (Amp 2).
Since the input offset is prevented by Pre-Amp when $V_{CC}$ is set to ON, this circuit can remarkably reduce the pop noise.

The total closed loop gain $G_V$ of this IC can be obtained by expression below when the closed loop voltage gain of Amp 1 is $G_{V1}$.

$$G_{V1} = 20\ell og \frac{R1 + (R_f + R2)}{R_f + R2} \text{ (dB)} \quad \ldots\ldots \quad (1)$$

The closed loop voltage gain of POWER Amp, Amp 3 and Amp 4 is fixed at $G_{V3} \fallingdotseq G_{V4} = 20dB$.
Therefore, the total closed circuit voltage gain $G_V$ is obtained through BTL connection by the expression below.

$$G_V = G_{V1} + G_{V3} + 6 \text{ (dB)} \quad \ldots\ldots\ldots\ldots\ldots \quad (2)$$

For example, when $R_f = 0\Omega$, $G_V$ is obtained by the expressions (1) and (2) as shown below.

$$G_V \fallingdotseq 24 + 20 + 6 = 50dB$$

The voltage gain is reduced when $R_f$ is increased. (Fig.2)
With the voltage gain reduced, since (1) the oscillation stability is reduced, and (2) the pop noise changes when $V_{CC}$ is set to ON, refer to the items 3 and 4.

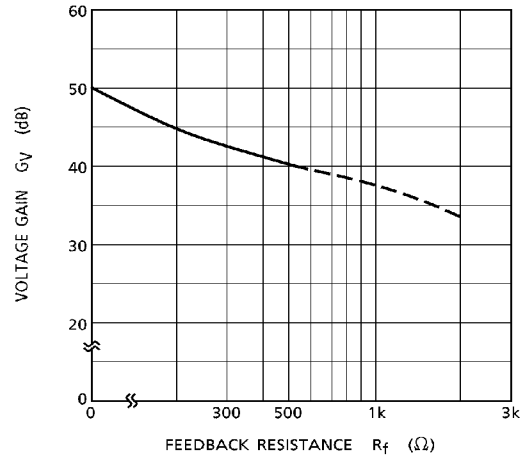


Fig.2

2. Stand-by SW function

By means of controlling pin④ (Stand-by terminal) to High and Low, the power supply can be set to ON and OFF. The threshold voltage of pin④ is set at 2.1V ($3V_{BE}$), and the Power Supply current is about 1$\mu$A (Typ.) at the stand-by state.

Pin④ control voltage : $V_{(SB)}$

| STAND-BY | POWER | $V_{(SB)}$ (V) |
|---|---|---|
| ON | OFF | 0~2 |
| OFF | ON | 3~$V_{CC}$ |

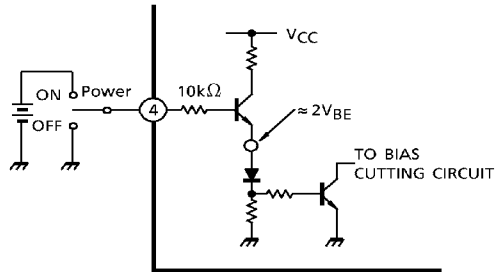


Fig.3 With pin④ set to High, Power is turned ON.

Advantage of stand-by SW

(1) Since $V_{CC}$ can directly be controlled to ON / OFF by the microcomputer, the switching relay can be omitted.

(2) Since the control current is microscopic, the switching relay of small current capacity is satisfactory for switching.

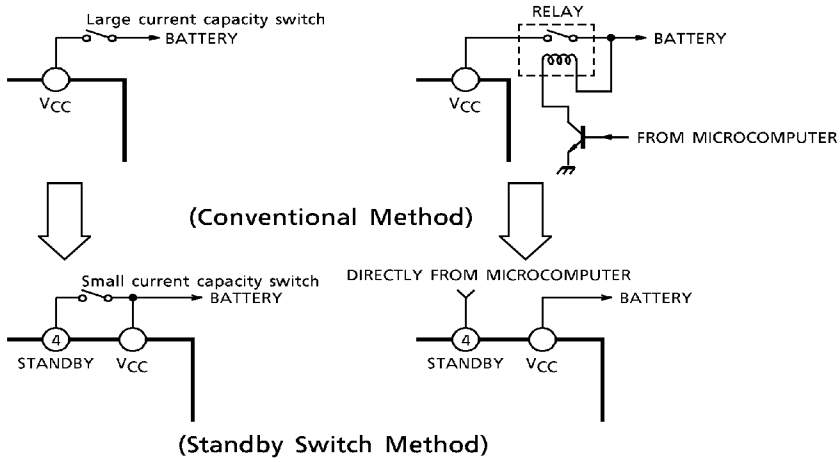


(Standby Switch Method)

3. Preventive measure against oscillation

For preventing the oscillation, it is advisable to use $C_4$, the condenser of polyester film having small characteristic fluctuation of the temperature and the frequency.
The resistance R to be series applied to $C_4$ is effective for phase correction of high frequency, and improves the oscillation allowance.
Since the oscillation allowance is varied according to the causes described below, perform the temperature test to check the oscillation allowance.

(1) Voltage gain to be used ($G_V$ Setting)
(2) Capacity value of condenser
(3) Kind of condenser
(4) Layout of printed board

In case of its use with the voltage gain $G_V$ reduced or with the feedback amount increased, care must be taken because the phase-inversion is caused by the high frequency resulting in making the oscillation viably generated.

4. Input offset prevention circuit at $V_{CC} \rightarrow$ON

Having the Pre-Amp (Amp 1) mounted on the primary stage, this IC contains the circuit for making the Amp 1 input voltage and the NF terminal voltage equipotential.
Therefore, the offset voltage produced at the input stage is suppressed to prevent the pop noise at $V_{CC} \rightarrow$ON. The capacity values of the input and NF condenser ($C_1$ and $C_2$) shall be set according to the gain to be used.

(Reference) (A) At $G_V = 50$dB ($R_f = 0\Omega$)
$C_1 = 4.7\mu$F, $C_2 = 47\mu$F

(B) At $G_V = 40$dB ($R_f = 470\Omega$)
$C_1 = 3.3\mu$F, $C_2 = 33\mu$F

5. Muting function

Through setting pin① (mute terminal) at about 1V or less, muting becomes possible.
The interval circuit of IC is shown in Fig.4.
When pin① is set to LOW, Q1 and Q2 are turned to ON, the charge of the ripple condenser is discharged and the bias is cut. The mute amount of 60dB or over can be obtained.
Since this muting function rapidly discharge the charge of the ripple filter capacitor of pin⑧, the pop noise is generated by the DC fluctuation of the bias section.
Therefore, this muting function is not appropriate to the audio muting but it is effective in muting at $V_{CC}$→ON.

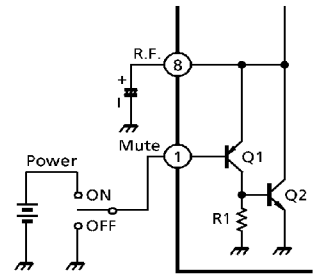


Fig.4 Mute circuit

6. External part list and description

| SYM-BOL | RECOM-MENDED VALUE | FEATURE | INFLUENCE | | REMARKS |
|---|---|---|---|---|---|
| | | | SMALLER THAN RECOMMENDED VALUE | LARGER THAN RECOMMENDED VALUE | |
| $C_1$ | 4.7μF | DC blocking | Related to pop noise at $V_{CC}$→ON. | | Related to gain. Refer to item 4. |
| $C_2$ | 47μF | Feedback condenser | Related to pop noise at $V_{CC}$→ON.<br>Determination of low cut-off frequency.<br>$C_2 = \frac{1}{2\pi \cdot f_L \cdot R_f}$ | | |
| $C_3$ | 220μF | Ripple reduction | Time constant is small at $V_{CC}$→ON or OFF. | Time constant is large at $V_{CC}$→ON or OFF. | |
| $C_4$ | 0.12μF | Oscillation prevention | Made liable to oscillate. | Oscillation allowance. | Refer to item 3. |
| $C_5$ | 1000μF | Ripple filter | For filtering power supply hum and ripple.<br>Large at using AC rectified power supply.<br>Small at using DC power supply. | | |
| $C_6$ | 1000pF | Oscillation prevention | Oscillation allowance improved.<br>Noise Reduction | | Refer to item 3. |

**MAXIMUM RATINGS** (Ta = 25°C)

| CHARACTERISTIC | SYMBOL | RATING | UNIT |
|---|---|---|---|
| Peak Supply Voltage (0.2s) | $V_{CC}$ (surge) | 50 | V |
| DC Supply Voltage | $V_{CC}$ (DC) | 25 | V |
| Operating Supply Voltage | $V_{CC}$ (opr) | 18 | V |
| Output Current (Peak) | $I_O$ (peak) | 9 | A |
| Power Dissipation | $P_D$ | 50 | W |
| Operating Temperature | $T_{opr}$ | −30~85 | °C |
| Storage Temperature | $T_{stg}$ | −55~150 | °C |

**ELECTRICAL CHARACTERISTICS**
(Unless otherwise specified, $V_{CC}$ = 13.2V, $R_L$ = 4Ω, f = 1kHz, Ta = 25°C)

| CHARACTERISTIC | SYMBOL | TEST CIR-CUIT | TEST CONDITION | MIN. | TYP. | MAX. | UNIT |
|---|---|---|---|---|---|---|---|
| Quiescent Supply Current | $I_{CCQ}$ | — | $V_{IN}$ = 0 | — | 120 | 250 | mA |
| Output Power | $P_{OUT}$ (1) | — | $V_{CC}$ = 14.4V, THD = 10% | — | 22 | — | W |
| | $P_{OUT}$ (2) | — | THD = 10% | 16 | 19 | — | |
| Total Harmonic Distortion Ratio | THD | — | $P_{OUT}$ = 1W | — | 0.04 | 0.4 | % |
| Voltage Gain | $G_V$ | — | — | 48 | 50 | 52 | dB |
| Output Noise Voltage | $V_{NO}$ | — | $R_g$ = 0Ω, BW = 20Hz~20kHz | — | 0.30 | 0.70 | $mV_{rms}$ |
| Ripple Rejection Ratio | R.R. | — | fripple = 100Hz, $R_g$ = 600Ω | 40 | 54 | — | dB |
| Input Resistance | $R_{IN}$ | — | — | — | 30 | — | kΩ |
| Output Offset Voltage | $V_{offset}$ | — | $V_{IN}$ = 0 | −0.3 | 0 | 0.3 | mV |
| Current at Stand-by State | $I_{SB}$ | — | — | — | 1 | 10 | μA |
| Cross Talk | C.T. | — | $R_g$ = 600Ω, $V_{OUT}$ = 0.775$V_{rms}$ (0dBm) | — | 60 | — | dB |
| Pin④ Control Voltage | $V_{SB}$ | — | Stand-by→OFF (Power→ON) | 2.5 | — | $V_{CC}$ | V |
| Pin① Control Voltage | V (Mute) | — | Mute→ON (Power→OFF) | — | 1.0 | 2.0 | V |

**TEST CIRCUIT**

TA8210AH, TA8210AL ($G_V$ = 50dB)

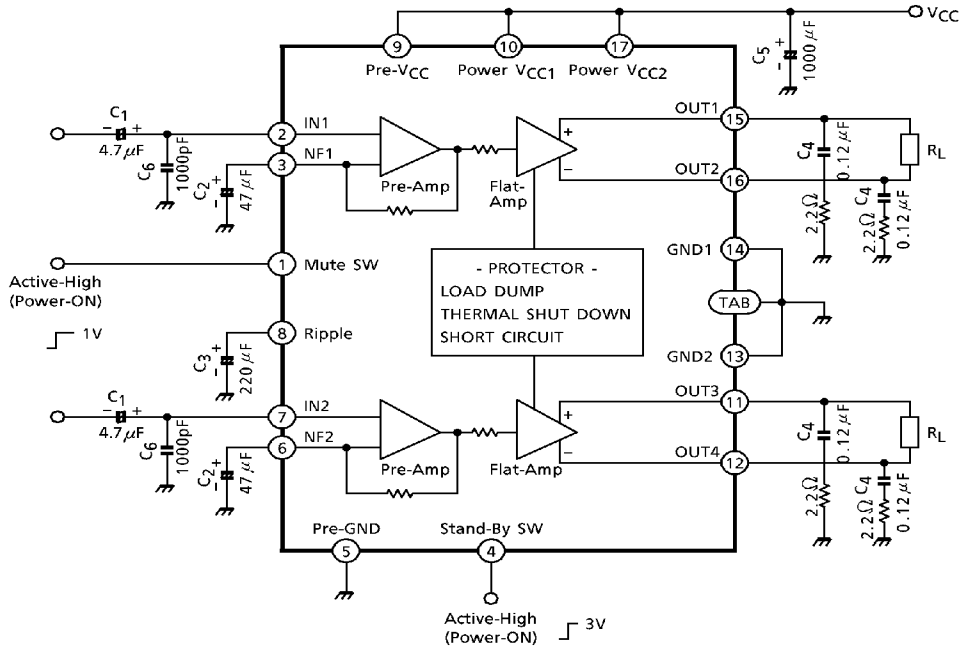

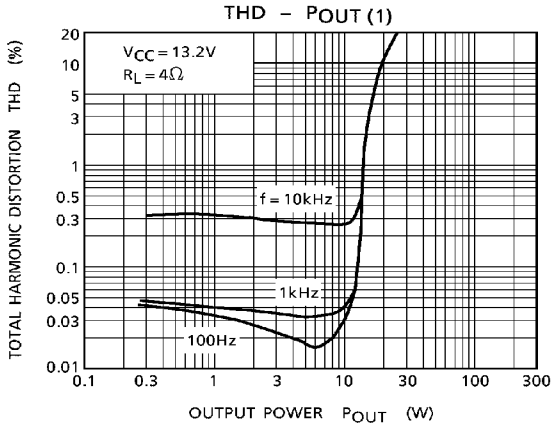
THD – POUT (1)
VCC = 13.2V
RL = 4Ω
f = 10kHz
1kHz
100Hz
TOTAL HARMONIC DISTORTION THD (%)
OUTPUT POWER POUT (W)

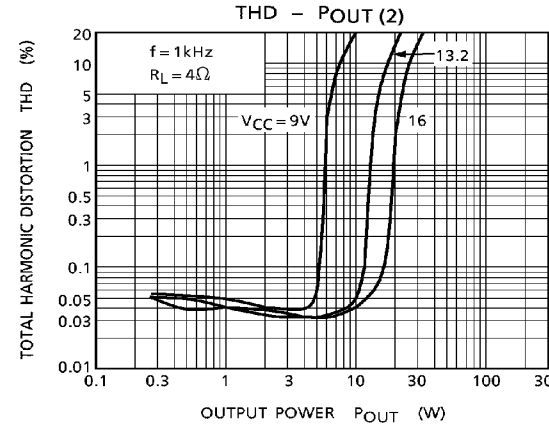
THD – POUT (2)
f = 1kHz
RL = 4Ω
VCC = 9V
13.2
16
TOTAL HARMONIC DISTORTION THD (%)
OUTPUT POWER POUT (W)

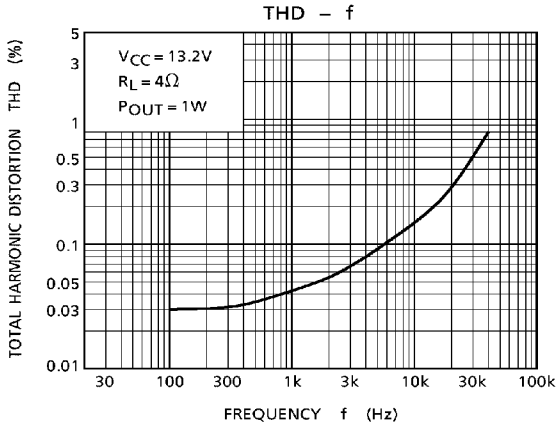
THD – f
VCC = 13.2V
RL = 4Ω
POUT = 1W
TOTAL HARMONIC DISTORTION THD (%)
FREQUENCY f (Hz)

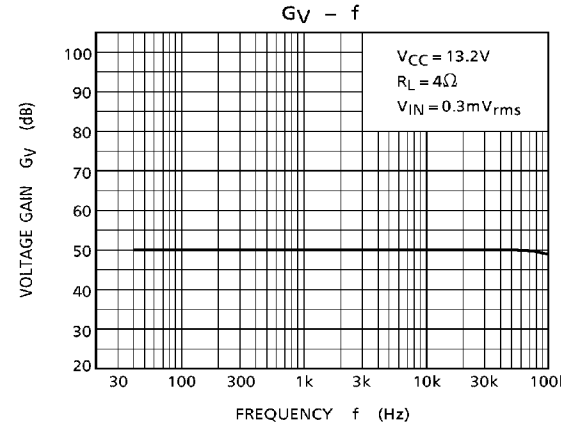
GV – f
VCC = 13.2V
RL = 4Ω
VIN = 0.3mVrms
VOLTAGE GAIN GV (dB)
FREQUENCY f (Hz)

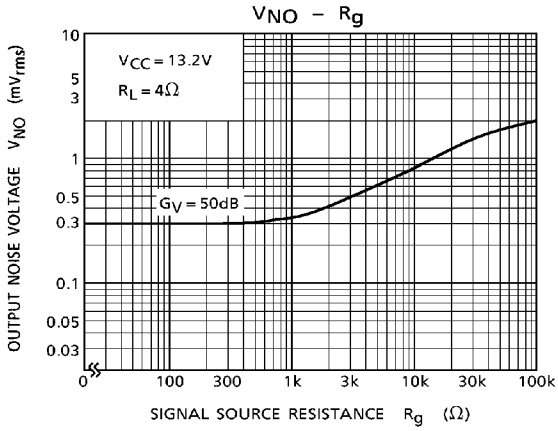
VNO – Rg
VCC = 13.2V
RL = 4Ω
GV = 50dB
OUTPUT NOISE VOLTAGE VNO (mVrms)
SIGNAL SOURCE RESISTANCE Rg (Ω)

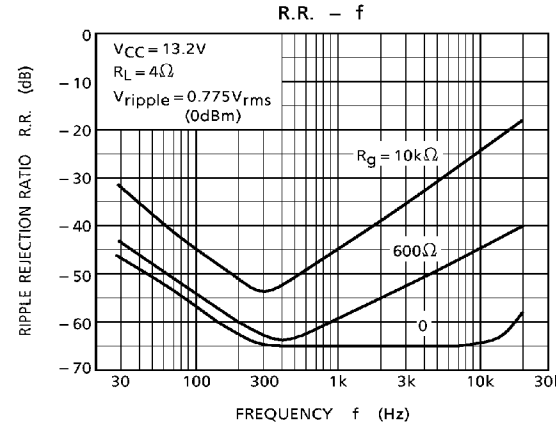
R.R. – f
VCC = 13.2V
RL = 4Ω
Vripple = 0.775Vrms
(0dBm)
Rg = 10kΩ
600Ω
0
RIPPLE REJECTION RATIO R.R. (dB)
FREQUENCY f (Hz)

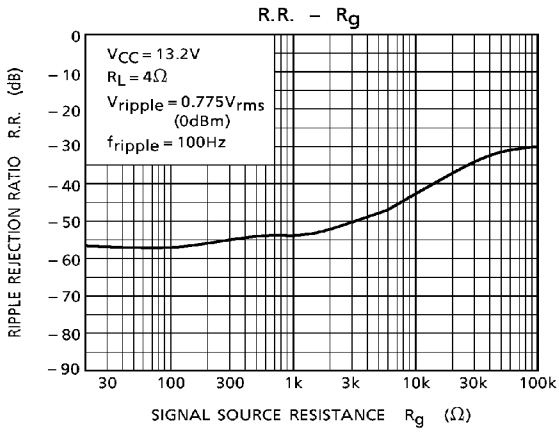
R.R. – Rg
VCC = 13.2V
RL = 4Ω
Vripple = 0.775Vrms (0dBm)
fripple = 100Hz
RIPPLE REJECTION RATIO R.R. (dB)
0
– 10
– 20
– 30
– 40
– 50
– 60
– 70
– 80
– 90
30
100
300
1k
3k
10k
30k
100k
SIGNAL SOURCE RESISTANCE Rg (Ω)

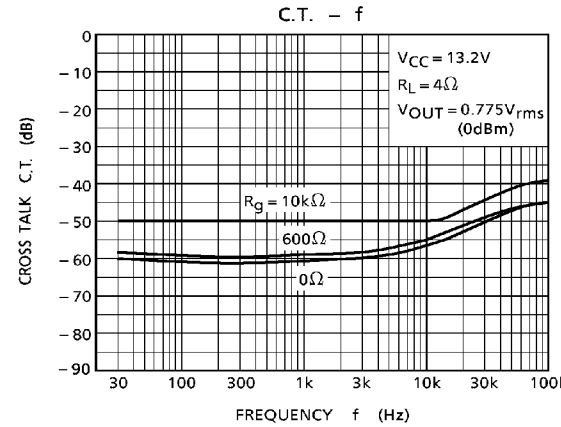
C.T. – f
VCC = 13.2V
RL = 4Ω
VOUT = 0.775Vrms (0dBm)
Rg = 10kΩ
600Ω
0Ω
CROSS TALK C.T. (dB)
0
– 10
– 20
– 30
– 40
– 50
– 60
– 70
– 80
– 90
30
100
300
1k
3k
10k
30k
100k
FREQUENCY f (Hz)

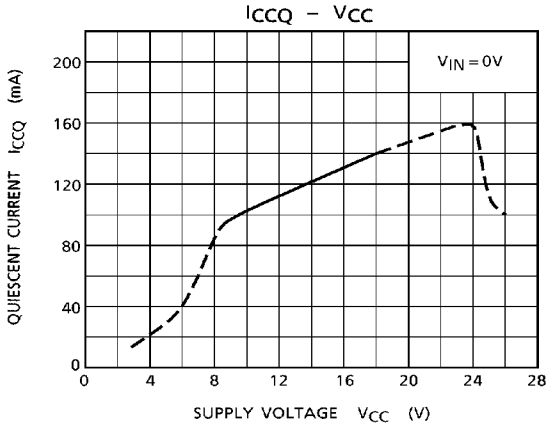
ICCQ – VCC
VIN = 0V
QUIESCENT CURRENT ICCQ (mA)
200
160
120
80
40
0
0
4
8
12
16
20
24
28
SUPPLY VOLTAGE VCC (V)

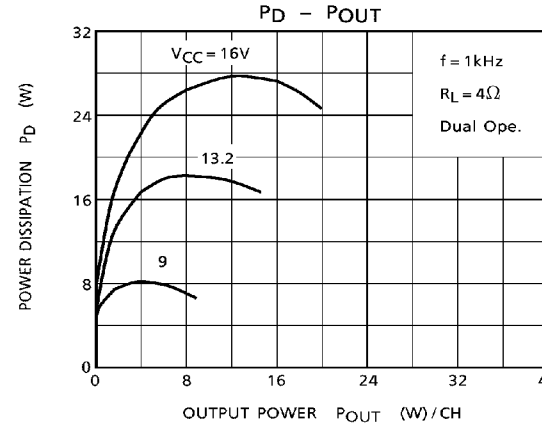
PD – POUT
VCC = 16V
13.2
9
f = 1kHz
RL = 4Ω
Dual Ope.
POWER DISSIPATION PD (W)
32
24
16
8
0
0
8
16
24
32
40
OUTPUT POWER POUT (W)/CH

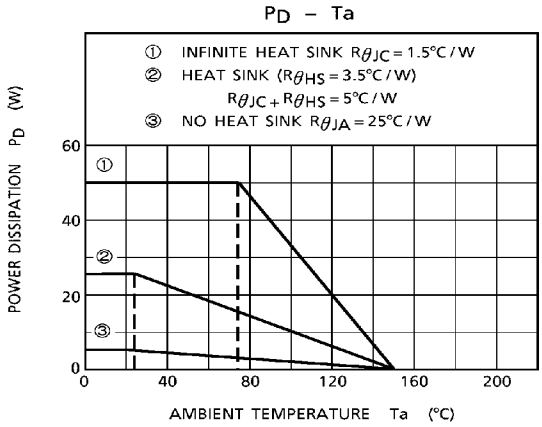
PD – Ta
① INFINITE HEAT SINK RθJC = 1.5°C/W
② HEAT SINK (RθHS = 3.5°C/W)
RθJC + RθHS = 5°C/W
③ NO HEAT SINK RθJA = 25°C/W
①
②
③
POWER DISSIPATION PD (W)
60
40
20
0
0
40
80
120
160
200
AMBIENT TEMPERATURE Ta (°C)

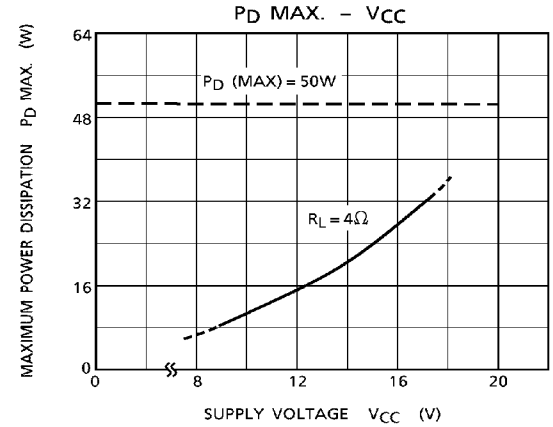
PD MAX. – VCC
PD (MAX) = 50W
RL = 4Ω
MAXIMUM POWER DISSIPATION PD MAX. (W)
64
48
32
16
0
0
8
12
16
20
SUPPLY VOLTAGE VCC (V)

**OUTLINE DRAWING**

HZIP17-P-2.00

Unit : mm

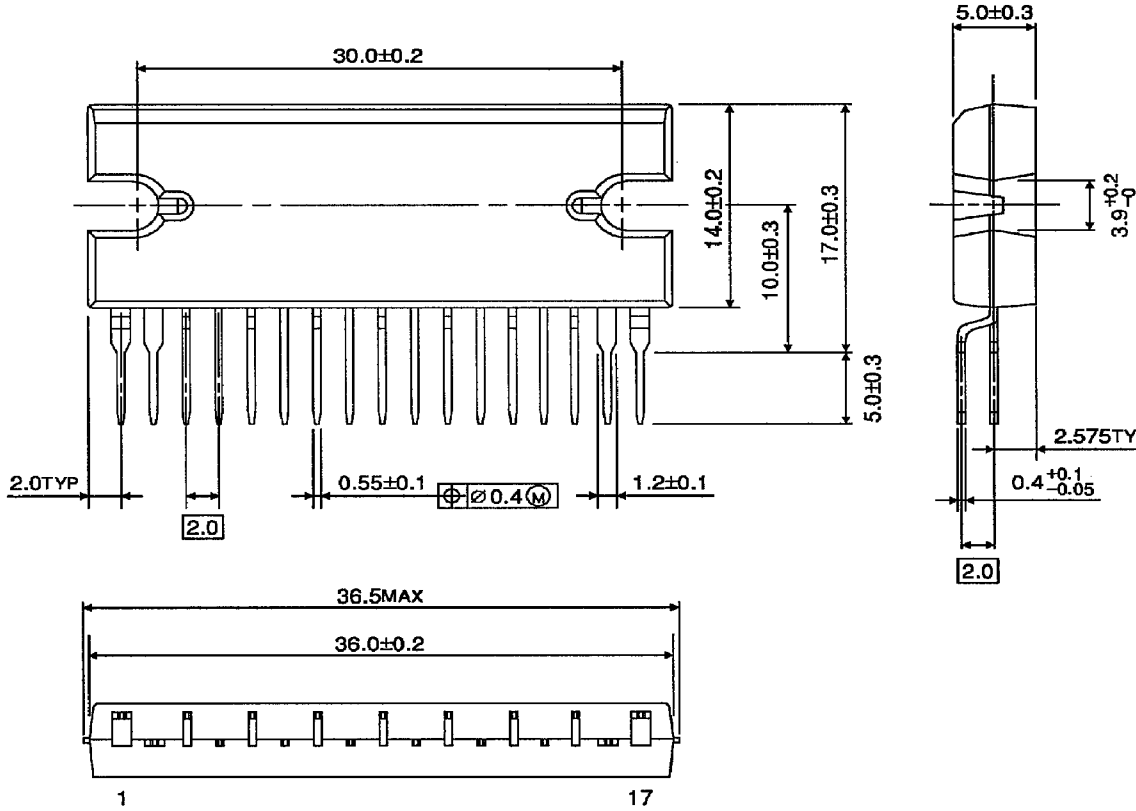


Weight : 9.8g (Typ.)

**OUTLINE DRAWING**

HSIP17-P-2.00

Unit : mm

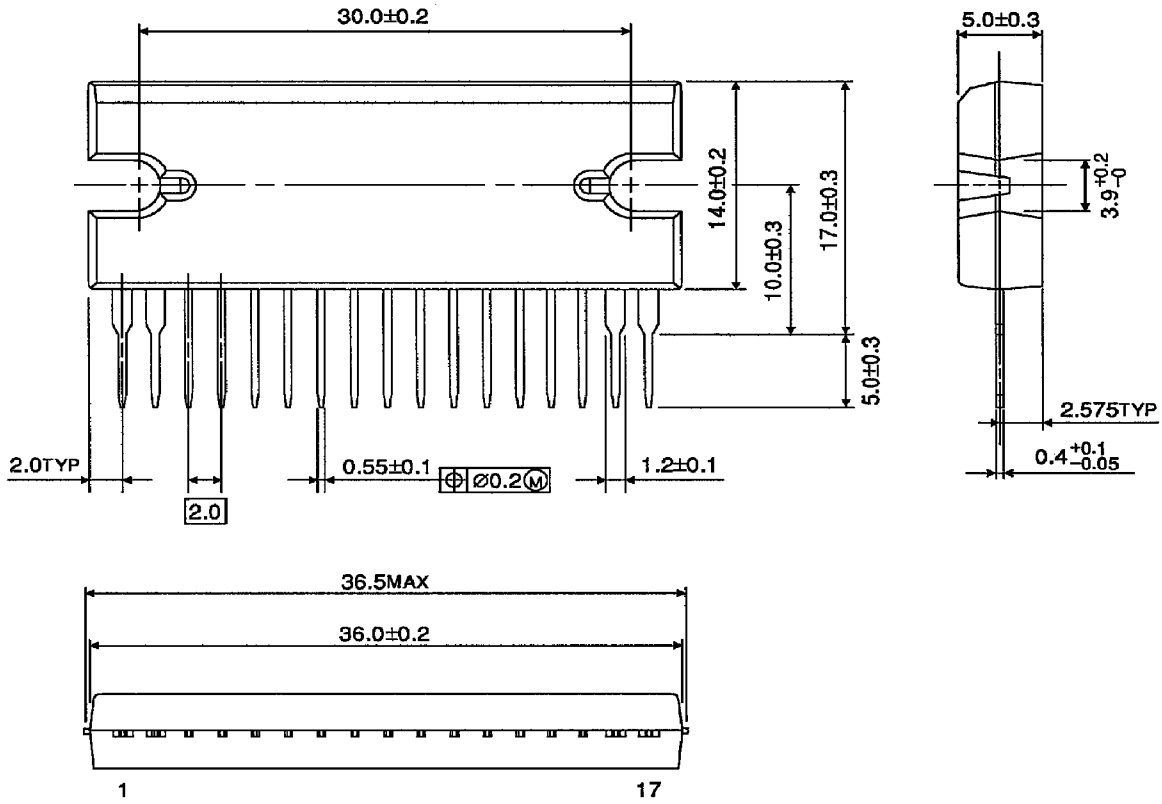


Weight : 9.8g (Typ.)