查询LT1106供应商 捷多邦，专业PCB打样工厂，24小时加急出货

LINEAR TECHNOLOGY

LT1106

Micropower Step-Up DC/DC Converter for PCMCIA Card Flash Memory

FEATURES

- **60mA Output Current at 12V from 3V Supply**
- **Shutdown to 10μA**
- Programmable 12V or 5V Output
- Up to 85% Efficiency
- Quiescent Current: 750μA
- Low V_{CESAT} Switch: 300mV at 0.5A Typical
- Uses Low Value, Thin, Surface Mount Inductors
- **Ultra-Thin 20-Lead TSSOP Package**

APPLICATIONS

- PCMCIA Card Flash Memory VPP Generator
- Portable Computers
- Portable Instruments
- DC/DC Converter Module Replacements

DESCRIPTION

The LT®1106 is the industry's first DC/DC converter designed for use on Type I and Type II PCMCIA cards. The device senses the VPP1 and VPP2 lines at the PCMCIA socket and generates a regulated 12V, 60mA programming supply if the socket does not provide it. Internal logic simplifies the interface to PCMCIA card microcontrollers. One input selects a 12V or 5V regulated output, while another input controls micropower shutdown. Two logic outputs indicate when the selected programming voltage is valid and whether the input supply is 3.3V or 5V.

The regulator features Burst Mode™ operation with a 0.5A, 300mV switch for efficiency up to 85%. High frequency 500kHz switching permits the use of small value, flat inductors that fit neatly on PCMCIA cards. The device requires just 1μF of output capacitance.

Quiescent current is 750μA which drops to 350μA when the card runs off the socket supply. The shutdown pin reduces supply current to only 10μA. The device includes a soft start feature which limits supply current transients when the card is inserted into a hot socket.

LT, LTC and LT are registered trademarks of Linear Technology Corporation.
Burst Mode is a trademark of Linear Technology Corporation.

TYPICAL APPLICATION

12V, 60mA Flash Memory Programming Supply

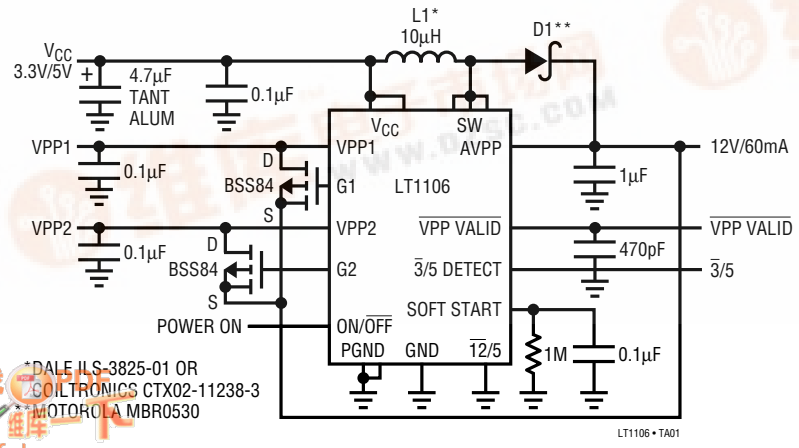

12V Output Efficiency

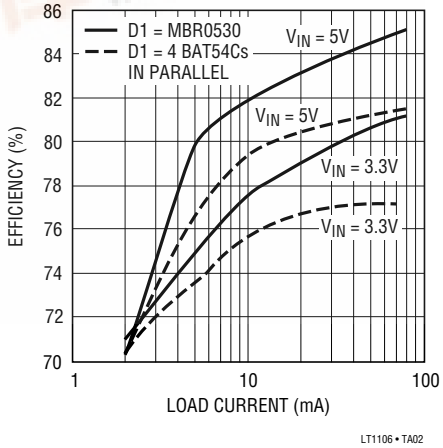

找PDF 维库一下 pdf.dzsc.com

ABSOLUTE MAXIMUM RATINGS

V_{CC} Voltage 7V
V_{SW} Voltage 20V
AVPP Voltage 20V
VPP1, VPP2 Voltage 20V
G1, G2 Voltage 20V
$V_{ON/\overline{OFF}}$ Voltage 7V
V_{SEL} Voltage 7V
I_{LIM} Voltage 7V
Maximum Power Dissipation 500mW
Operating Temperature Range ..... 0°C to 70°C
Storage Temperature Range ..... –65°C to 150°C
Lead Temperature (Soldering, 10 sec) ..... 300°C

PACKAGE/ORDER INFORMATION

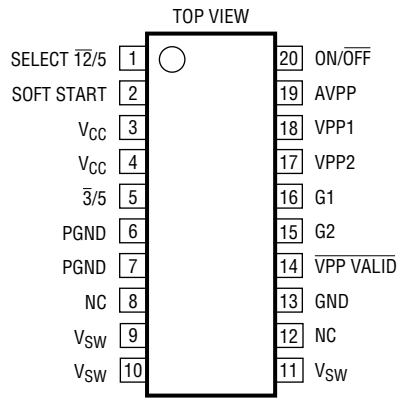

F PACKAGE
20-LEAD PLASTIC TSSOP

T_{JMAX} = 100°C, θ_{JA} = 90°C/W

ORDER PART NUMBER
LT1106CF

Consult factory for Industrial and Military grade parts

ELECTRICAL CHARACTERISTICS

T_A = 25°C, V_{CC} = 5V, $V_{ON/\overline{OFF}}$ = 3V, unless otherwise noted.

SYMBOL	PARAMETER	CONDITIONS		MIN	TYP	MAX	UNITS
I_Q	Quiescent Current	V_{SEL} = 0.2V, AVPP = 12V			750	900	µA
	Quiescent Current, Shutdown	$V_{ON/\overline{OFF}}$ = 0.2V			9	15	µA
	"Doze" Mode Current	V_{SEL} = 0.2V, VPP1 or VPP2 = 12V			320		µA
	Input Voltage Range			2		6	V
	Output Sense Voltage	V_{SEL} = 3V, VPP1 and VPP2 Floating V_{SEL} = 0.2V, VPP1 and VPP2 Floating	● ●	4.75 11.50	5 12	5.25 12.60	V V
	Output Referred Comparator Hysteresis	V_{SEL} = 3V V_{SEL} = 0.2V			15 35		mV mV
f_{OSC}	Oscillator Frequency	Current Limit Not Asserted		400	500	700	kHz
DC	Maximum Duty Cycle		●	80	85	92	%
t_{ON}	Switch On-Time				1.7		µs
	Reference Line Regulation	2V < V_{IN} < 6V			0.06	0.15	%/V
V_{CESAT}	Switch Saturation Voltage	I_{SW} = 0.5A			230	350	mV
	Switch Leakage Current	V_{SW} = 12V, Switch Off			0.1	10	µA
	Switch Current Limit	V_{IN} = 5V, Soft Start Floating V_{IN} = 3V, Soft Start Floating		450 500	600 650	900 950	mA mA
	Soft Start Pin Current	Soft Start Grounded			80	120	µA
	Select Input Voltage Low					0.8	V
	Select Input Voltage High			1.6			V
	ON/$\overline{OFF}$ Input Voltage Low					0.8	V
	ON/$\overline{OFF}$ Input Voltage High			1.6			V
	ON/$\overline{OFF}$ Bias Current	$V_{ON/\overline{OFF}}$ = 5V $V_{ON/\overline{OFF}}$ = 3V $V_{ON/\overline{OFF}}$ = 0V			16.0 8.0 0.1	24.0 14.0 1.1	µA µA µA

ELECTRICAL CHARACTERISTICS

$T_A = 25°C$, $V_{CC} = 5V$, $V_{ON/\overline{OFF}} = 3V$, unless otherwise noted.

SYMBOL	PARAMETER	CONDITIONS		MIN	TYP	MAX	UNITS
	Select Pin Bias Current	$0V < V_{SEL} < 5V$			0.1	1	µA
	VPP1/VPP2 Input Sense Threshold			11.0	11.5	11.9	V
	AVPP Pin Input Current	 $V_{ON/\overline{OFF}} = 0.2V$			50 0.1	90 1	µA µA
	VPP1/VPP2 Pin Input Current	 $V_{ON/\overline{OFF}} = 0.2V$			50 0.1	90 1	µA µA
	$\overline{\text{VPP VALID}}$ Threshold	AVPP Rising (High to Low Transition)	●	11.4		12	V
	$\overline{\text{VPP VALID}}$ Output Voltage Low	$I_{SINK} = 100µA$			0.13	0.3	V
	$\overline{\text{VPP VALID}}$ Output Voltage High	$I_{SOURCE} = 2.5µA$		4	4.5		V
	$\overline{3}$/5 Comparator Threshold		●	3.6	3.75	4.2	V
	$\overline{3}$/5 Comparator Output High	$I_{LOAD} = 50µA$		3.65	3.8		V
	$\overline{3}$/5 Comparator Output Low	$I_{LOAD} = 50µA$			0.75	0.9	V
	Off State Current at G1/G2	VPP1 = 10V, VG1 = 12V or VPP2 = 10V, VG2 = 12V or $V_{ON/\overline{OFF}} = 0V$			0.1	1	µA

The ● denotes specifications which apply over the full operating temperature range.

TYPICAL PERFORMANCE CHARACTERISTICS

Oscillator Frequency

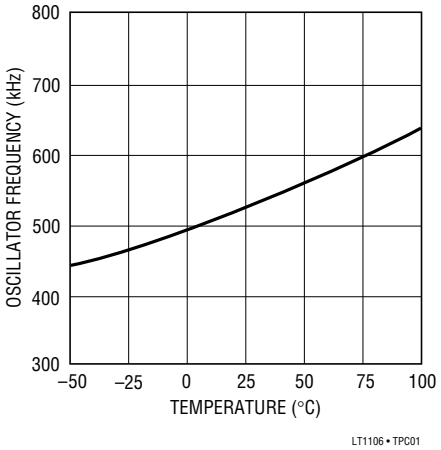

Switch Current Limit

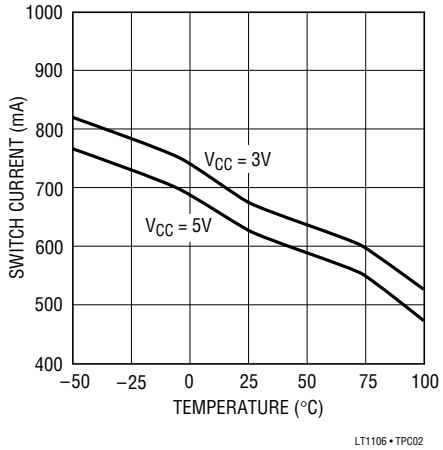

Switch Saturation Voltage

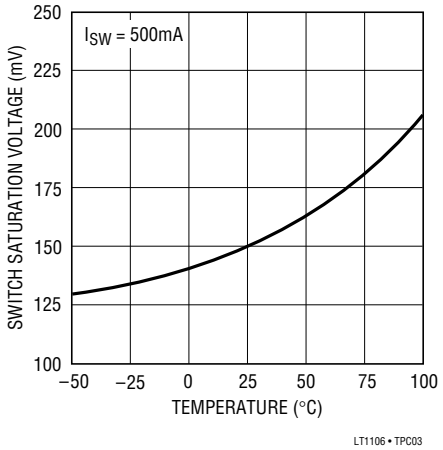

TYPICAL PERFORMANCE CHARACTERISTICS

$\overline{3}$/5 Comparator Threshold

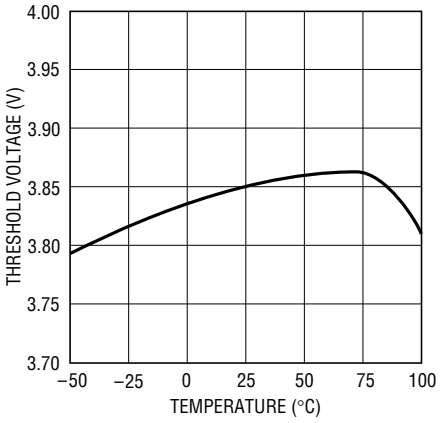

LT1106 • TPC04

AVPP Sense Voltage

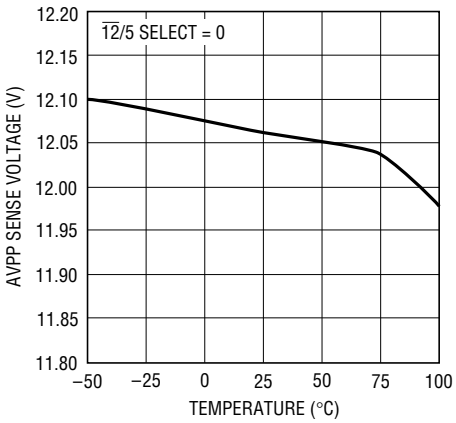

LT1106 • TPC05

AVPP Sense Voltage

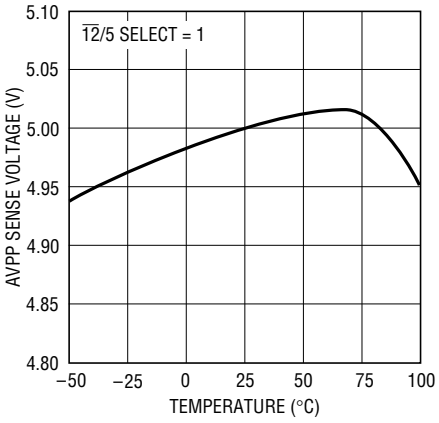

LT1106 • TPC06

Supply Current in Shutdown

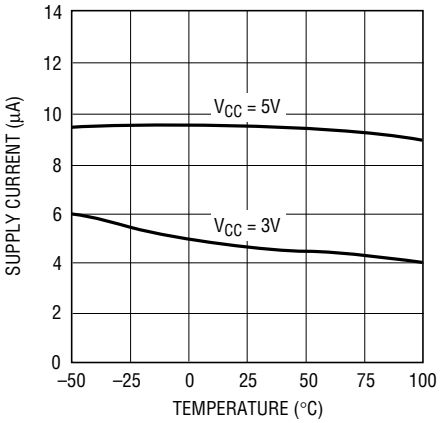

LT1106 • TPC07

Supply Current

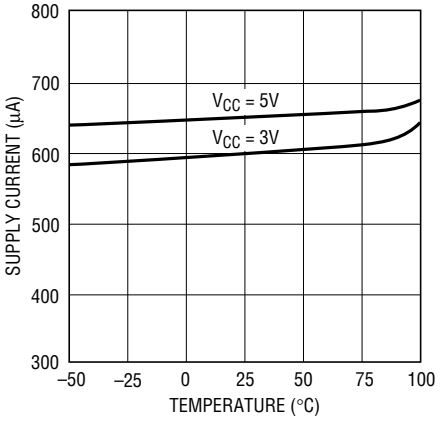

LT1106 • TPC08

Maximum Duty Cycle

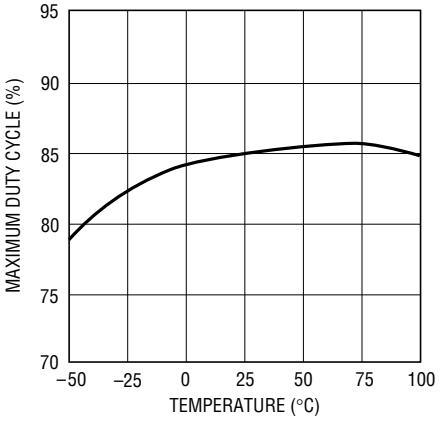

LT1106 • TPC09

Start-Up Waveforms, I_{LOAD} = 1mA

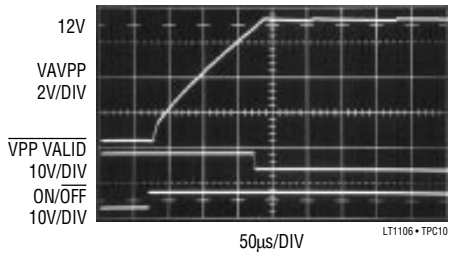

LT1106 • TPC10

Start-Up Waveforms with Soft Start, I_{LOAD} = 10mA

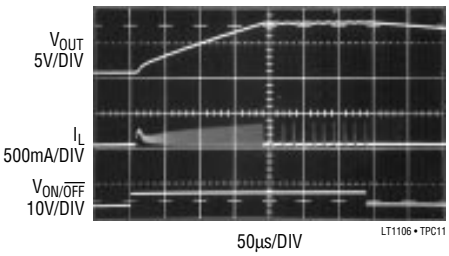

LT1106 • TPC11

Load Transient Response, C_{OUT} = 1μF

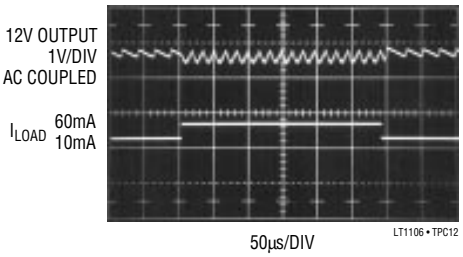

LT1106 • TPC12

PIN FUNCTIONS

SELECT $\overline{12}$/5 (Pin 1): Tie to V_{IN} or logic 1 for 5V output; tie to GND or logic 0 for 12V output.

SOFT START (Pin 2): A 0.1μF/1MΩ parallel RC from this pin to GND provides a Soft Start function upon device turn-on. Initially about 80μA will flow from the pin into the capacitor. When the voltage at the pin reaches approximately 0.4V, current ceases flowing out of the pin. See Applications Information section.

V_{CC} (Pins 3, 4): Input Supply. Both pins should be tied together. At least 1μF input bypass capacitance is required. More capacitance reduces ringing on the supply line.

$\overline{3}$/5 (Pin 5): Supply Comparator Output. This pin provides logic output indicating the value of the input supply. High when V_{CC} = 5V; low when V_{CC} = 3.3V.

PGND (Pins 6, 7): Power Ground. Connect to ground plane.

V_{SW} (Pins 9, 10, 11): Collector of Power Switch. High dV/dt present on this pin. To minimize radiated noise keep layout short and direct.

GND (Pin 13): Signal Ground. Connect of ground plane.

$\overline{\text{VPP VALID}}$ (Pin 14): This pin provides a logic signal indicating that ouput voltage is greater than 11.4V. Active low with internal 200k pull-up resistor.

G1, G2 (Pins 16, 15): External MOSFET Gate Drives. When VPP1 or VPP2 is greater than 11.7V, G1 or G2 is driven to about 0.8V. When VPP1 or VPP2 is less than 11.7V, the drives assume a high impedance state pulled up to the AVPP pin through an internal 100k resistor.

VPP1, VPP2 (Pins 18, 17): Programming Power Inputs. The LT1106 senses both VPP1 and VPP2 supplies at the PCMCIA card socket. If VPP1 or VPP2 is greater than 11V, the LT1106 operates in "Doze" Mode—the switching regulator turns off and the drive to external P-channel MOSFETs turns on. Supply current in Doze Mode is about 350μA. Input current into VPP1 and VPP2 is about 1μA when the device is shut down.

AVPP (Pin 19): Output Sense Pin. This pin connects to a 1MΩ resistive divider that sets the output voltage. In shutdown, the resistor string is disconnected and current into this pin is reduced to <1μA.

ON/$\overline{\text{OFF}}$ (Pin 20): Shutdown Control. When pulled below 1.5V, this pin disables the LT1106 and reduces supply current to 10μA. All circuitry except the $\overline{3}$/5 comparator is disabled in shutdown. The part is enabled when ON/$\overline{\text{OFF}}$ is greater than 1.5V.

BLOCK DIAGRAM

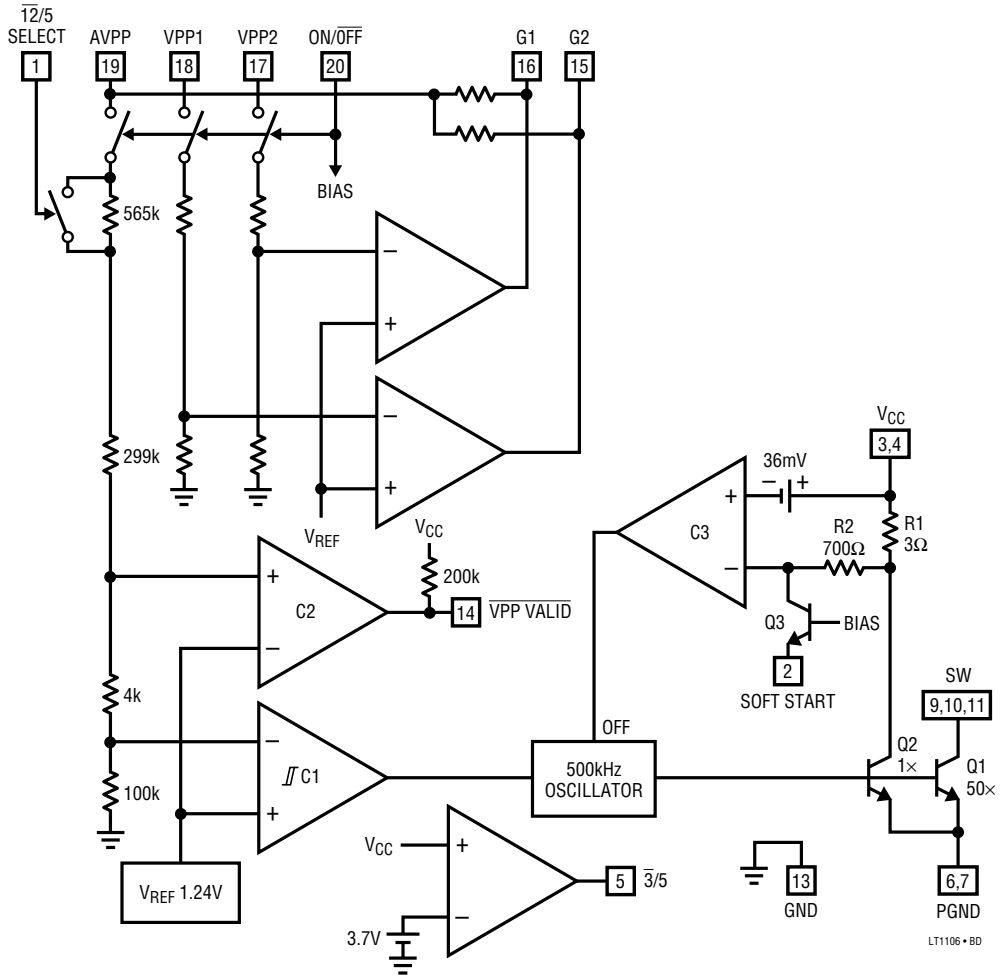

APPLICATIONS INFORMATION

Functional Description

The LT1106 is a micropower, step-up DC/DC converter specifically configured for PCMCIA flash memory card VPP generation. The device generates a 5V or 12V output selectable via the $\overline{12}$/5 Select pin. If 12V is present on either the VPP1 or VPP2 pins, gate drive outputs G1 and G2 are driven low, turning on external PMOS devices. The switching regulator inside the LT1106 is idled when 12V is present on VPP1 or VPP2.

The $\overline{\text{VPP VALID}}$ output goes low when the voltage at AVPP exceeds 11.4V This signal can be used to indicate presence of a valid programming voltage. The $\overline{3}$/5 comparator indicates whether the input voltage is 3.3V or 5V.

The Soft Start pin can be used to limit inrush current upon start-up. A 0.1µF capacitor in parallel with a 1M resistor is connected between this pin and ground to limit peak inductor current at start-up.

Switching Regulator Operation

When 12V is not present on the VPP1 or VPP2 pins and the device is enabled (ON/$\overline{\text{OFF}}$ = 1), the LT1106 generates a regulated voltage at the AVPP pin. This voltage is programmable between 5V or 12V depending on the state of the $\overline{12}$/5 Select pin. Referring to the block diagram, hysteretic comparator C1 monitors AVPP via the resistor divider. When the negative input of C2 falls below 1.24V, C1's

APPLICATIONS INFORMATION

output goes high, enabling the oscillator. Switch Q1 alternately turns on causing current build-up in the inductor; then turns off allowing the built-up current to flow into the output capacitor via the catch diode. As the output voltage increases, so does the voltage at C1's negative input. When it exceeds the reference voltage plus C1's hysteresis, C1 turns the oscillator off.

Switch current is limited to approximately 600mA by Q2, R1 and C3. Two percent of Q1's collector current flows in Q2; this current flows through R1 causing a voltage drop in R1 proportional to Q1's collector current. When R1's drop equals 36mV, comparator C3 forces the oscillator off. This action results in varying on-time, fixed off-time operation that keeps peak switch current controlled. By connecting a 0.1μF capacitor from the Soft Start pin to ground, a current will flow in Q3 upon start-up. The current flows through 700Ω resistor R2, reducing the amount of current needed from Q2 to force the oscillator off. As current flows into the 0.1μF capacitor, the voltage at pin 2 increases and eventually current ceases to flow in Q3.

Inductor Selection

All components for use in PCMCIA Type I cards must be less than 1.1mm high. This somewhat limits the selection of appropriate inductors. Dale Electronics (605-665-9301) manufactures the ILS-3825-01, a monolithic ferrite inductor that meets Type I height requirements. Generally, inductors used with the LT1106 must fulfill several requirements. It must be able to carry 0.95A (the maximum switch current) without saturation. DCR should be kept low to maintain efficiency. The switching frequency of the LT1106 is quite high, over 500kHz so magnetic material is important. Ferrite core material works well in this frequency range. Avoid low cost iron powder cores which have substantial AC loss at the LT1106's switching frequency. Inductance value need not be over 10μH.

Capacitor Selection

The LT1106 will operate with 1μF of output capacitance. Output ripple voltage is approximately 400mV with this value and can be reduced significantly by increasing output capacitance. The ripple voltage, although on the high side, poses no problems for programming flash memory. If operating the device in 5V ouput mode the capacitance should be increased. Ceramic capacitors are suitable for the output. Distributed capacitance, i.e., 0.1μF or 0.2μF units next to individual flash memory chips, is acceptable. The input capacitor should have at least some tantalum capacitance (low Q) to minimize resonance on the input. Flash memory cards are typically several inches away from a solid low impedance supply due to sockets, connectors, etc. If just ceramic capacitors are used at the supply pin of the LT1106, switching currents will resonate the supply line causing ringing that can exceed $500mV_{P-P}$. The high Q, low ESR nature of ceramic capacitors causes this. A few microfarad's worth of tantalum capacitors with moderate ESR and low Q characteristics will reduce or eliminate the problem.

Diode Selection

As with inductors, most good power Schottky diodes are in packages that exceed the 1.1mm height limit of the Type I PCMCIA card. Motorola manufactures the MBRO530 Schottky diode, ideal for use with the LT1106. This diode's maximum height however, is 1.35mm, making it difficult to use in Type 1 cards. Philips Components manufactures the BAT54C. Four units in parallel make an adequate diode.

TYPICAL APPLICATION

Alternative Scheme Allows 12V from VPP1/VPP2 to Provide Power When LT1106 is in Shutdown

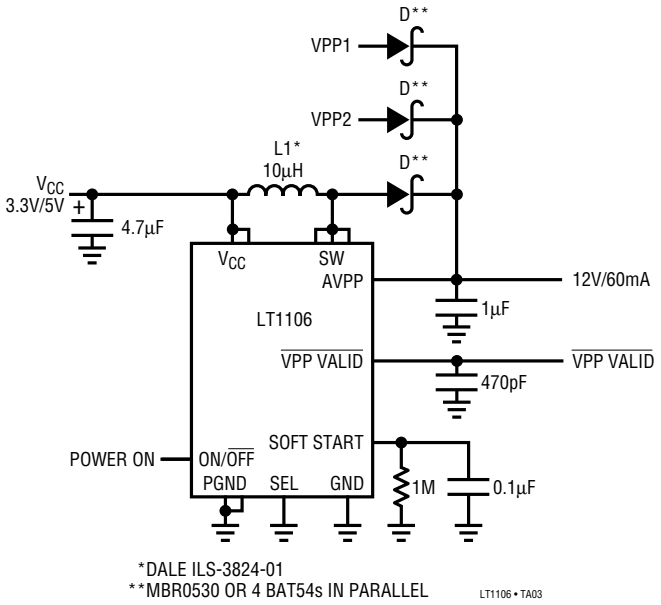

PACKAGE DESCRIPTION

Dimensions in inches (millimeters) unless otherwise noted.

F Package
20-Lead Plastic TSSOP

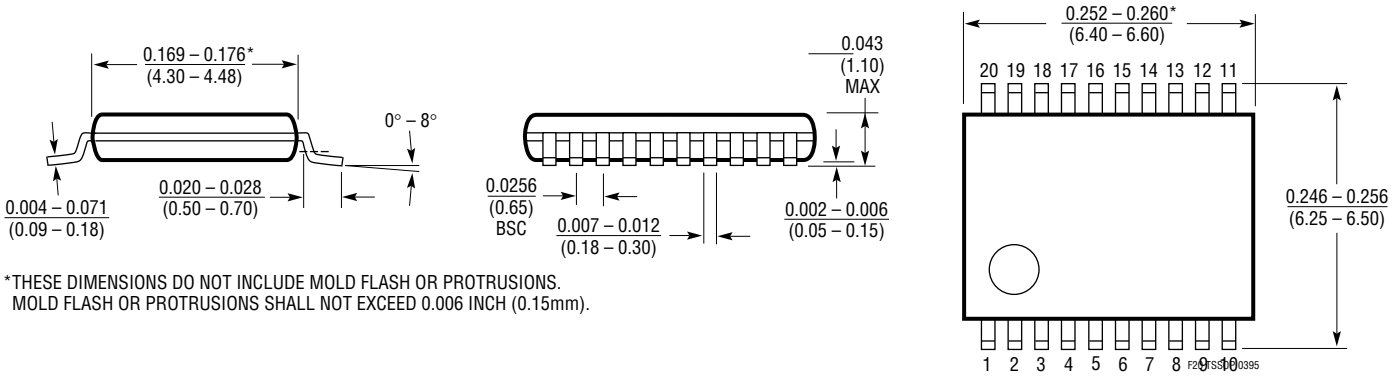

*THESE DIMENSIONS DO NOT INCLUDE MOLD FLASH OR PROTRUSIONS.
MOLD FLASH OR PROTRUSIONS SHALL NOT EXCEED 0.006 INCH (0.15mm).

RELATED PARTS

PART NUMBER	DESCRIPTION	COMMENTS
LT1109	5V to 12V/60mA VPP Generator	300µA I_Q, 120kHz Oscillator
LT1109A	5V to 12V/120mA VPP Generator	300µA I_Q, 120kHz Oscillator
LT1301	5V to 12V/200mA VPP Generator	120µA I_Q, 155kHz Oscillator
LT1309	5V to 12V/60mA VPP Generator	650µA I_Q, 650kHz Oscillator

LT/GP 0595 10K • PRINTED IN THE USA