CMOS 4-BIT MICROCONTROLLER

TMP47P416VF

The 47P416V is the system evaluation LSI of 47C216/416 with 32K bits one-time PROM. The 47P416V programs / verifies using an adapter socket to connect with PROM programmer, as it is in TMM27256AD.
In addition, the 47P416V and the 47C216 are pin compatible. The 47P416V operates as the same as 47C216/416 by programming to the internal PROM.

PART No.	EPROM	RAM	PACKAGE	ADAPTER SOCKET
TMP47P416VF	OTP 4096 × 8-bit	256 × 4-bit	QFP44-P-1414-0.80D	BM1192

PIN ASSIGNMENT (TOP VIEW)

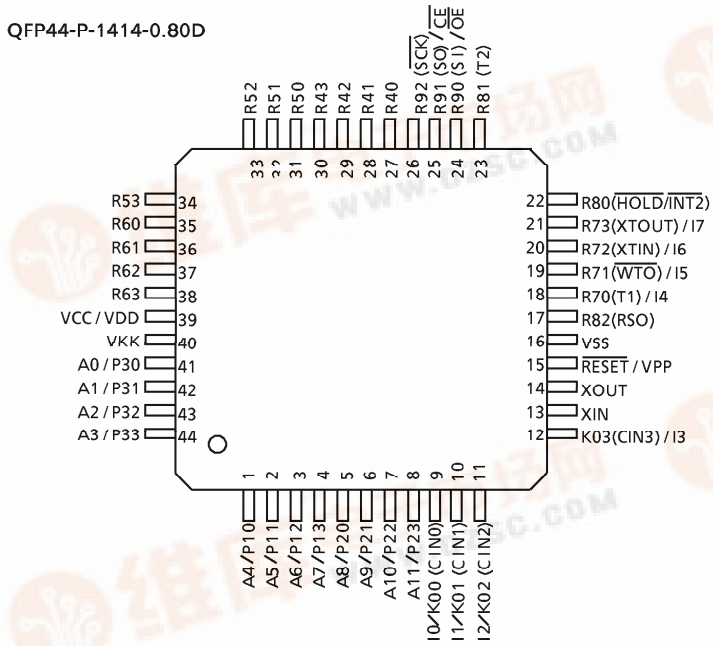

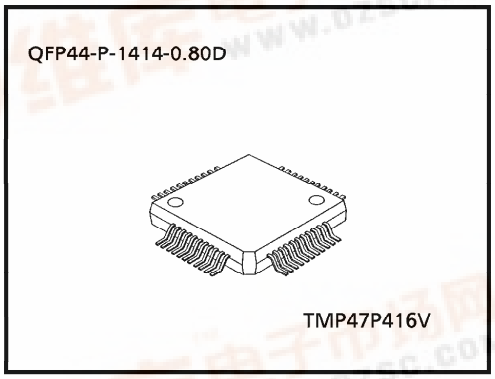

PIN FUNCTION

The 47P416V has MCU mode and PROM mode.

(1) MCU mode
The 47C216/416 is pin compatible.

(2) PROM mode

PIN NAME	INPUT / OUTPUT	FUNCTIONS	PIN NAME(MCU mode)
A11 to A8	INPUT	Address inputs	P23 to P20
A7 to A4			P13 to P10
A3 to A0			P33 to P30
I7 to I4	I/O	Data inputs / outputs	R73 to R70
I3 to I0			K03 to K00
$\overline{CE}$	Input	Chip Enable input	R91
$\overline{OE}$		Output Enable input	R90
VPP	Power supply	+ 12.5 V / 5 V (Program supply voltage)	$\overline{RESET}$
VCC		+ 5 V	VDD
VSS		0 V	VSS
R43 to R40	I/O	Be fixed to low level for input processing.	
R53 to R50			
R63 to R60			
R82 to R80 ($\overline{HOLD}$)		PROM mode setting pin. Be fixed to low level.	
R92			
XIN	Input	Input the clock from the external oscillator.	
XOUT	Output	Be fixed to low level.	
VKK	Power supply	Be fixed to VCC level.	

OPERATIONAL DESCRIPTION

The following is an explanation of hardware configuration and operation in relation to the 47P416V. The 47P416V is the same as the 47C216/416 except that an OTP is used instead of a built-in mask ROM.

1. OPERATION mode

The 47P416V has a MCU mode and a PROM mode.

1.1 MCU mode

The MCU mode is set by attaching a resonator between the XIN and Xout pins. Operation in the MCU mode is the same as for the 47C216/416.

1.1.1 Program Memory

The program storage area is the same as for the 47C416. Data conversion tables must be set in two locations when using the 47P416V to check 47C216 operation.

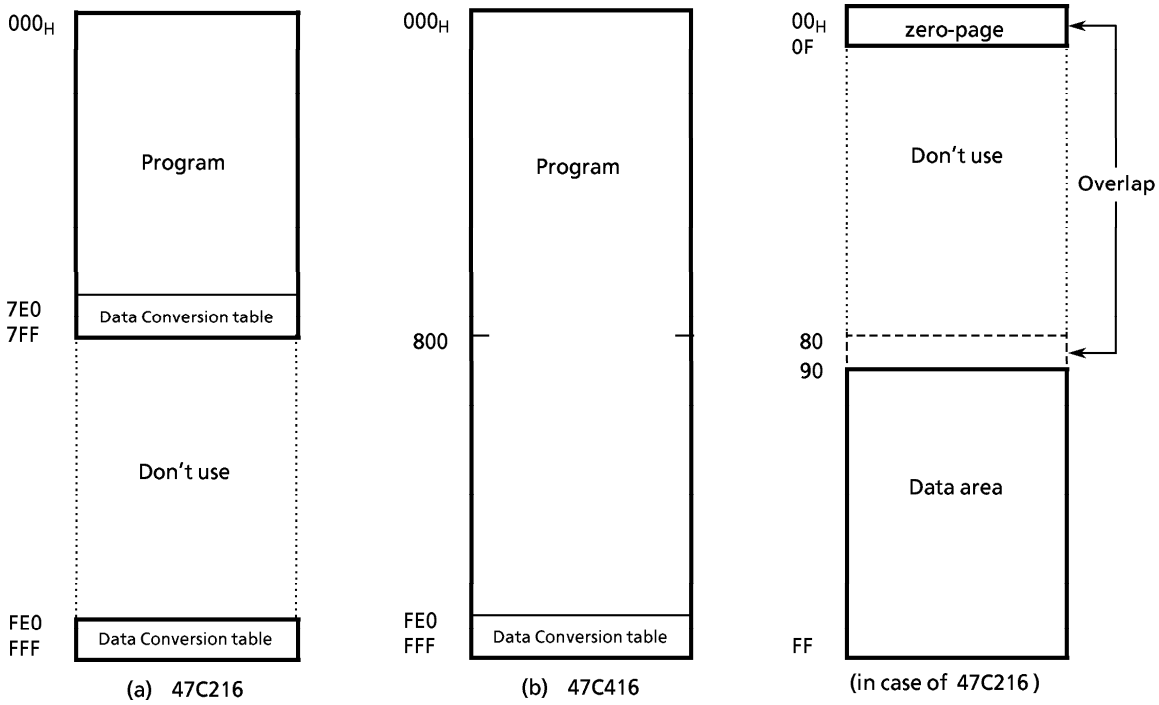

Figure 1-1. Program area (ROM)

Figure 1-2. RAM addressing

1.1.2 Data Memory

The 47P416V contains 256 × 4-bit (equivalent to 47C416) data memory. When the 47P416V is used as evaluator of the 47C216, programming should be performed assuming that the RAM is assigned to addresses 00 to $0F_H$ and 90 to FF_H as show in Figure 1-2 by considering the application software evaluation.

1.1.3 Input/Output Circuitry

(1) Pin Configuration
47P416V is the same as 47C216/416.

(2) I/O ports
The I/O circuitries of 47P416V I/O ports are the same as the code MA type I/O circuitries of the 47C216/416.
When using as an evaluator of other I/O codes (MB, MC), external resistors are required. Figure 1-3 shows the external circuitry.

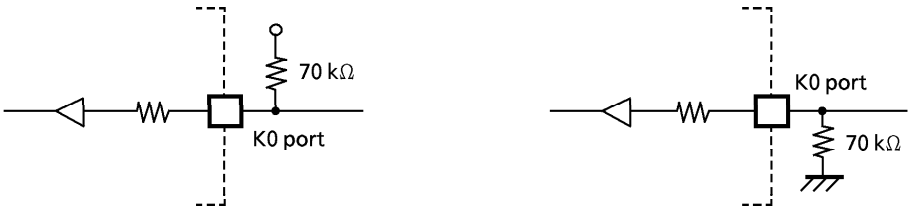

(a) In the case of code MB (b) In the case of code MC

Figure 1-3. I/O Circuitry Code and External Circuity

1.2 PROM mode

The PROM mode is set by inputting the external check to the XIN pin when XOUT pin is pulled down to the VSS level. The PROM mode can be used as a general-purpose PROM writer for program writing and verification (A high-speed program mode is used set the ROM type the same as for the TMM 27256AD.)

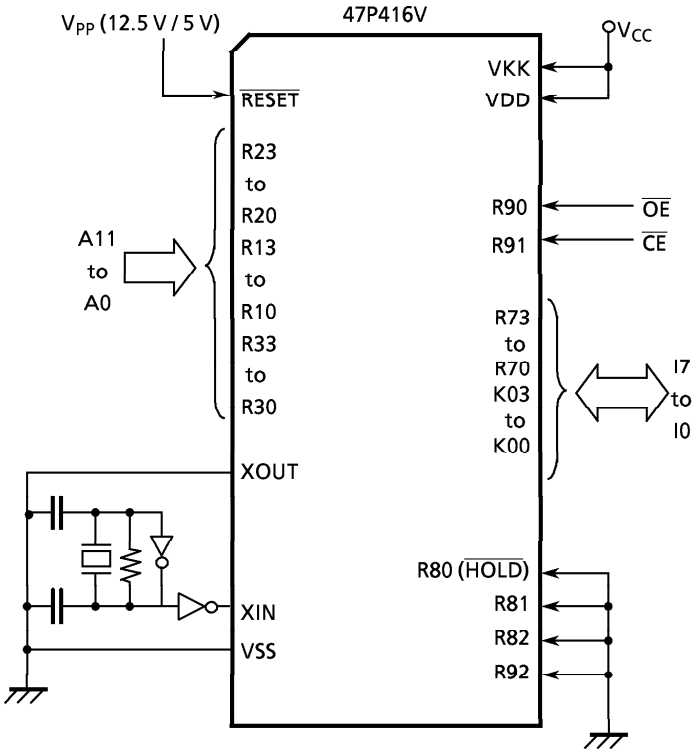

Figure 1-4. Setting for PROM mode

1.2.1 Program Writing

When writing a program, set a ROM type to "27256A" (programming voltage : 12.5 V). Since the 47P416V has a 4096 × 8-bit internal PROM (000 to FFF_H), set a stop address of a prom writer to "FFF_H".
For a general-purpose PROM write, use the writer which does not have or can release an electric signature mode.

Note. When the data written to OTP is same as the data of PROM programmer, there is the possibility that the security writing can not be executed, which is depended on the types of PROM programmers.
In this case, set the data of PROM programmer to "00" and execute the security writing after writing the data to OTP.

1.2.2 High Speed Programming Mode

The program time can be greatly decreased by using this high speed programming mode. The device is set up in the high speed programming mode when the programming voltage (+ 12.5 V) is applied to the V_{PP} terminal with V_{CC} = 6 V and $\overline{CE}$ = V_{IH}.

The programming is achieved by applying a single low level 1ms pulse the $\overline{CE}$ input after addresses and data are stable. Then the programmed data is verified by using Program Verify Mode.

If the programmed data is not correct, another program pulse of 1ms is applied and then programmed data is verified. This should be repeated until the program operates correctly (max. 25 times).

After correctly programming the selected address, one additional program pulse with pulse width 3 times that needed for programming is applied.

When programming has been completed, the data in all addresses should be verified with V_{CC} = V_{PP} = 5 V.

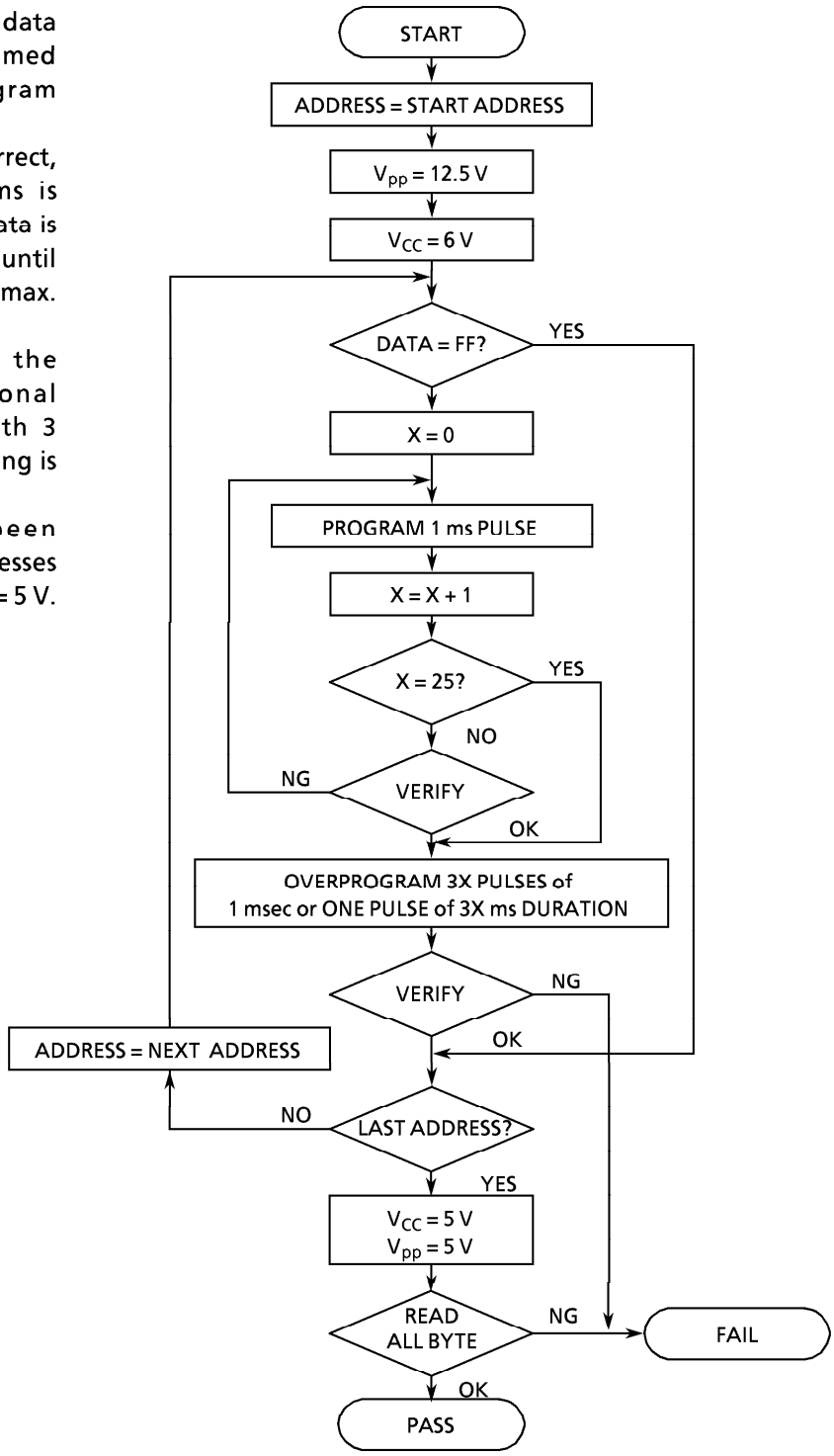

Figure 1-5. FLOW CHART

ELECTRICAL CHARACTERISTICS

ABSOLUTE MAXIMUM RATINGS (V_{SS} = 0 V)

PARAMETER	SYMBOL	PINS	RATING	UNIT
Supply Voltage	V_{DD}		– 0.3 to 6.5	V
Program Voltage	V_{PP}	$\overline{RESET}$ / V_{PP} pin	– 0.3 to 13.0	V
Input Voltage	V_{IN}		– 0.3 to V_{DD} + 0.3	V
Output Voltage	V_{OUT1}	R7, R8, R9, XOUT	– 0.3 to V_{DD} + 0.3	V
	V_{OUT3}	P1, P2, P3, R4, R5, R6	V_{DD} – 38 to V_{DD} + 0.3	
Output Current (per 1 pin)	I_{OUT1}	R70, R82	30	mA
	I_{OUT2}	R71 to R73, R80, R81, R9	3.2	
	I_{OUT3}	P1, P2, P3	– 12	
	I_{OUT4}	R4, R5, R6	– 25	
Output Currnent (Total)	ΣI_{OUT3}	P1, P2, P3	– 80	mA
	ΣI_{OUT4}	R4, R5, R6	– 100	
Power Dissipation [T_{opr} = 70 ℃]	PD		600	mW
Soldering Temperature (time)	Tsld		260 (10 s)	°C
Storage Temperature	Tstg		– 55 to 125	°C
Operating Temperature	Topr		– 30 to 70	°C

RECOMMENDED OPERATING CONDITIONS (V_{SS} = 0 V, T_{opr} = – 30 to 70 °C)

PARAMETER	SYMBOL	PINS	CONDITIONS	Min.	Max.	UNIT
Supply Voltage	V_{DD}		In the Normal mode	4.5	5.5	V
			In the SLOW mode	2.7		
			In the HOLD mode	2.0		
Input - High Voltage	V_{IH1}	Except Hysteresis Input	$V_{DD} \geqq 4.5$ V	$V_{DD} \times 0.7$	V_{DD}	V
	V_{IH2}	Hysteresis Input		$V_{DD} \times 0.75$		
	V_{IH3}		$V_{DD} < 4.5$ V	$V_{DD} \times 0.9$		
Input - Low Voltage	V_{IL1}	Except Hysteresis Input	$V_{DD} \geqq 4.5$ V	0	$V_{DD} \times 0.3$	V
	V_{IL2}	Hysteresis Input			$V_{DD} \times 0.25$	
	V_{IL3}		$V_{DD} < 4.5$ V		$V_{DD} \times 0.1$	
Clock Frequency	fc	XIN, XOUT		0.4	8.0	MHz
	fs	XTIN, XTOUT		30.0	34.0	kHz

Note. Input voltage V_{IH3}, V_{IL3} : in the SLOW or HOLD mode

D.C. CHARACTERISTICS

(V_{SS} = 0 V, T_{opr} = – 30 to 70 °C)

PARAMETER	SYMBOL	PINS	CONDITIONS	Min.	Typ.	Max.	UNIT
Hysteresis Voltage	V_{HS}	Hysteresis Input		–	0.7	–	V
Input Current	I_{IN1}	K0, $\overline{RESET}$	V_{DD} = 5.5 V, V_{IN} = 5.5 V / 0 V	–	–	± 2	μA
	I_{IN2}	R ports (open drain)					
Input Resistance	R_{IN1}	KO port with pull-up/pull-down		30	70	150	kΩ
	R_{IN2}	$\overline{RESET}$		100	220	450	
Pull-down resistance	R_K	source open drain	V_{DD} = 5.5 V, V_{KK} = –30 V	–	80	–	
Output Leakage Current	I_{LO1}	sink open drain	V_{DD} = 5.5 V, V_{IN} = 5.5 V	–	–	2	μA
	I_{LO2}	source open drain	V_{DD} = 5.5 V, V_{OUT} = –30 V	–	–	–2	
Output Level High Voltage	V_{OH}	P1, P2, P3	V_{DD} = 4.5 V, I_{OH} = –5 mA	2.4	–	–	V
Output Level Low Voltage	V_{OL}	R71 to R73, R80, R81, R9	V_{DD} = 4.5 V, I_{OL} = 1.6 mA	–	–	0.4	V
Output Level High Current	I_{OH}	R4, R5, R6	V_{DD} = 4.5 V, V_{OL} = 2.4 V	–	–15	–	mA
Output Level Low Current	I_{OL}	R70, R82	V_{DD} = 4.5 V, V_{OL} = 1.0 V	–	15	–	mA
Supply Current (in the Normal mode)	I_{DD}		V_{DD} = 5.5 V, fc = 4 MHz	–	3	6	mA
Supply Current (in the SLOW mode)	I_{DDS}		V_{DD} = 3.0 V, fs = 32.768 kHz	–	30	60	μA
Supply Current (in the HOLD mode)	I_{DDH}		V_{DD} = 5.5 V	–	0.5	10	μA

Note 1. Typ. values show those when Topr = 25 °C, VDD = 5 V

Note 2. Input Current I_{IN1} ; The current through resistor is not included, when the input resistor (pull-up/pull-down) is contained.

Note 3. Supply Current I_{DD}, I_{DDH} ; V_{IN} = 5.3 V / 0.2 V
The K0 port is open when the input resistor is contained. The voltage applied to the R port is within the valid range.
I_{DDS} ; V_{IN} = 2.8 V / 0.2 V, low frequency clock is only oscillated (connecting XTIN, XTOUT).
at comparator input is disabled.

A/D conversion characteristics

(VSS = 0 V, VDD = 4.5 to 5.5 V, Topr = – 30 to 70 °C)

PARAMETER	SYMBOL	PINS	CONDITIONS	Min.	Typ.	Max.	UNIT
Analog Input Voltage	V_{AIN}	CIN3 to CIN0		V_{SS}	–	V_{DD}	V
A/D conversion error				–	–	$\pm\frac{1}{2}$	LSB

A.C. CHARACTERISTICS

(V_{SS} = 0 V, V_{DD} = 4.5 to 5.5 V, T_{opr} = – 30 to 70 °C)

PARAMETER	SYMBOL	CONDITIONS	Min.	Typ.	Max.	UNIT
Instruction Cycle Time	t_{cy}	In the Normal mode	1.0	—	20	μs
		In the SLOW mode	235	—	267	
High level clock pulse width	t_{WCH}	External clock mode	80	—	—	ns
Low level clock pulse width	t_{WCL}					
Shift Data Hold Time	t_{SDH}		0.5 t_{cy} – 300	—	—	ns

Note. External circuit for $\overline{SCK}$ Pin and SO pin

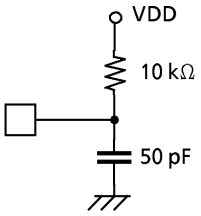

Serial port (completion of Transmission)

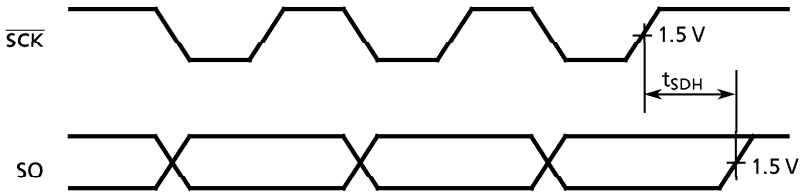

RECOMMENDED OSCILLATING CONDITIONS

(V_{SS} = 0 V, V_{DD} = 4.5 to 6.0 V, T_{opr} = – 30 to 70 °C)

Recommended oscillating conditions of the 47P416 are equal to the 47C416's.

DC/AC CHARACTERISTICS (V_{SS} = 0 V)

(1) Read Operation

PARAMETER	SYMBOL	CONDITION	Min.	Typ.	Max.	UNIT
Output Level High Voltage	V_{IH4}		$V_{CC} \times 0.7$	–	V_{CC}	V
Output Level Low Voltage	V_{IL4}		0	–	$V_{CC} \times 0.3$	V
Supply Voltage	V_{CC}		4.75	–	6.0	V
Programming Voltage	V_{PP}					
Address Access Time	t_{ACC}	V_{CC} = 5.0 ± 0.2 5V	0	–	350	ns

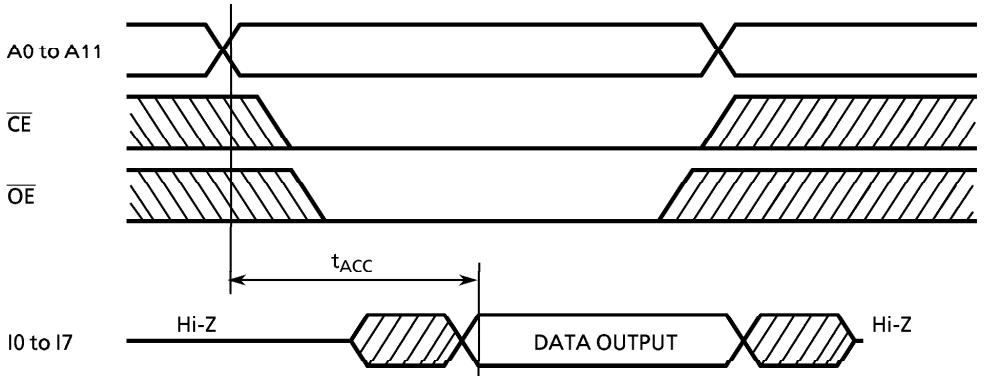

(2) High Speed Programming Operation

PARAMETER	SYBOL	CONDITION	Min.	Typ.	Max.	UNIT
Input High Voltage	V_{IH4}		$V_{CC} \times 0.7$	–	V_{CC}	V
Input Low Voltage	V_{IL4}		0	–	$V_{CC} \times 0.3$	V
Supply Voltage	V_{CC}		4.75	–	6.0	V
V_{PP} Power Supply Voltage	V_{PP}		12.0	12.50	13.0	V
Programming Pulse Width	t_{PW}	V_{CC} = 6.0 ± 0.25 V	0.95	1.0	1.05	ms

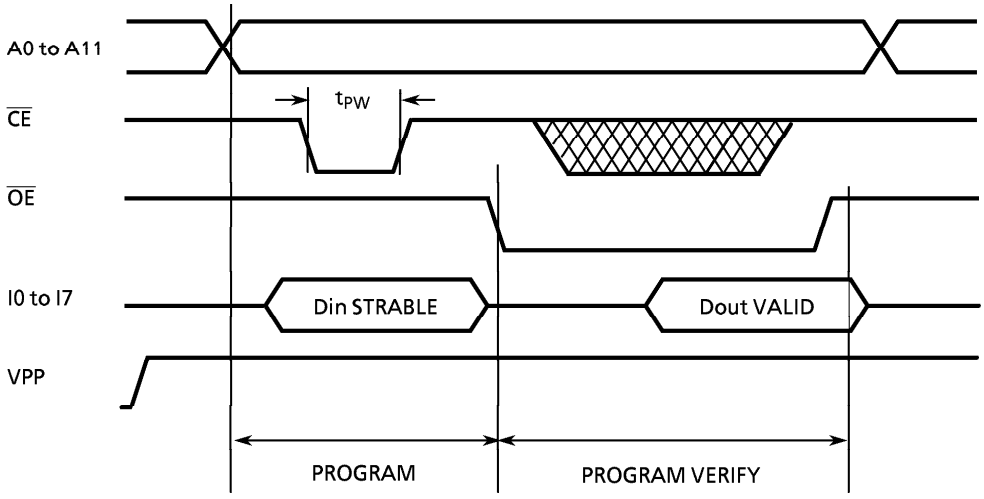

Note. There are some PROMprogrammer types which cannot program OTP.
In TMP47P416V, VPP pin is also used as RESET pin. To set a mode, REST/VPP pin must be set to "low" during 1 ms and more after the rising of power-on and the rising of VDD electrical power.

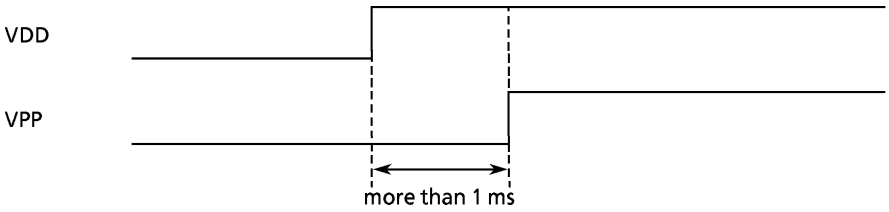

Recommende EPROM programmer

TYPE	
R4945	(ADVANTEST)
UNISITE	(DATA I/O)
AF – 9706	(ANDO)
PECKER – 11	(AVAL DATA)