查询74LVT74供应商

DATA SHEET

74LVT74

3.3V Dual D-type flip-flop

Product specification

1996 Aug 28

IC24 Data Handbook

Philips
Semiconductors

PHILIPS

3.3V Dual D-type flip-flop 74LVT74

QUICK REFERENCE DATA

SYMBOL	PARAMETER	CONDITIONS T_{amb} = 25°C; GND = 0V	TYPICAL	UNIT
t_{PLH} t_{PHL}	Propagation delay CPn to Qn	C_L = 50pF; V_{CC} = 3.3V	3.1 3.6	ns
C_{IN}	Input capacitance	V_I = 0V or 3.0V	3	pF
I_{CC}	Total supply current	V_{CC} = 3.6V	0.5	mA

PIN CONFIGURATION

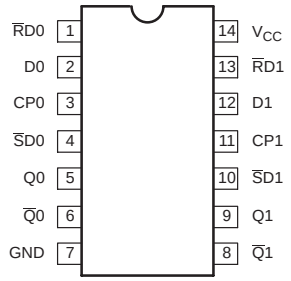

LOGIC SYMBOL

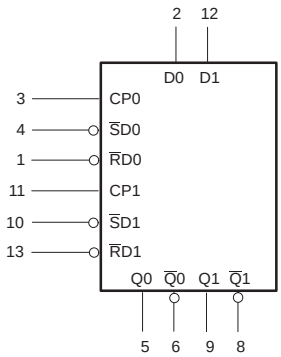

DESCRIPTION

The 74LVT74 is a dual positive edge-triggered D-type flip-flop featuring individual data, clock, set, and reset inputs; also true and complementary outputs. Set ($\overline{S}$D) and reset ($\overline{R}$D) are asynchronous active low inputs and operate independently of the clock input. When set and reset are inactive (high), data at the D input is transferred to the Q and $\overline{Q}$ outputs on the low-to-high transition of the clock. Data must be stable just one setup time prior to the low-to-high transition of the clock for predictable operation. Clock triggering occurs at a voltage level and is not directly related to the transition time of the positive-going pulse. Following the hold time interval, data at the D input may be changed without affecting the levels of the output.

PIN DESCRIPTION

PIN NUMBER	SYMBOL	NAME AND FUNCTION
2, 12	D0, D1	Data inputs
3, 11	CP0, CP1	Clock inputs (active rising edge)
4, 10	$\overline{S}$D0, $\overline{S}$D1	Set inputs (active LOW)
1, 13	$\overline{R}$D0, $\overline{R}$D1	Reset inputs (active LOW)
5, 6, 8, 9	Qn, $\overline{Q}$n	Data outputs

LOGIC SYMBOL (IEEE/IEC)

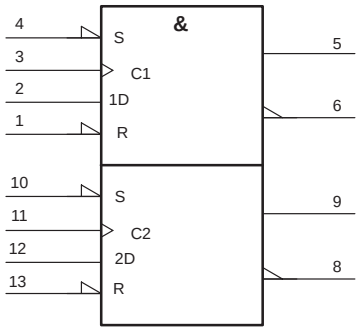

ORDERING INFORMATION

PACKAGES	TEMPERATURE RANGE	OUTSIDE NORTH AMERICA	NORTH AMERICA	DWG NUMBER
14-Pin Plastic SO	–40°C to +85°C	74LVT74 D	74LVT74 D	SOT108-1
14-Pin Plastic SSOP	–40°C to +85°C	74LVT74 DB	74LVT74 DB	SOT337-1
14-Pin Plastic TSSOP	–40°C to +85°C	74LVT74 PW	74LVT74PW DH	SOT402-1

LOGIC DIAGRAM

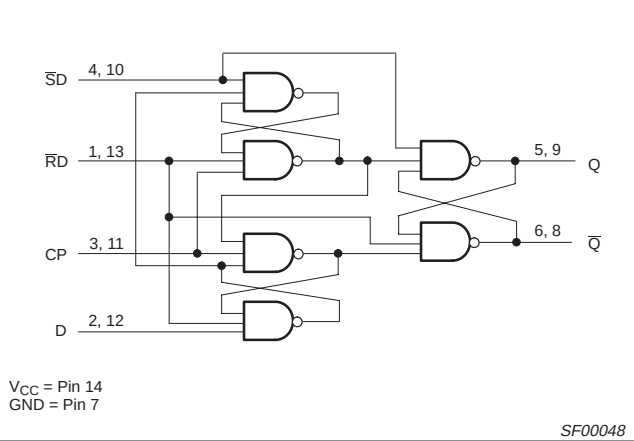

FUNCTION TABLE

INPUTS				OUTPUTS		OPERATING MODE
$\overline{SD}$	$\overline{RD}$	CP	D	Q	$\overline{Q}$	
L	H	X	X	H	L	Asynchronous set
H	L	X	X	L	H	Asynchronous reset
L	L	X	X	H	H	Undetermined*
H	H	↑	h	H	L	Load “1”
H	H	↑	l	L	H	Load “0”
H	H	↑̸	X	NC	NC	Hold

NOTES:
H = High voltage level
h = High voltage level one setup time prior to low-to-high clock transition
L = Low voltage level
l = Low voltage level one setup time prior to low-to-high clock transition
NC = No change from the previous setup
X = Don’t care
↑ = Low-to-high clock transition
↑̸ = Not low-to-high clock transition
* = This setup is unstable and will change when either set or reset return to the high level.

ABSOLUTE MAXIMUM RATINGS[1, 2]

SYMBOL	PARAMETER	CONDITIONS	RATING	UNIT
V_{CC}	DC supply voltage		–0.5 to +4.6	V
I_{IK}	DC input diode current	$V_I < 0$	–50	mA
V_I	DC input voltage[3]		–0.5 to +7.0	V
I_{OK}	DC output diode current	$V_O < 0$	–50	mA
V_{OUT}	DC output voltage[3]	Output in Off or High state	–0.5 to +7.0	V
I_{OUT}	DC output current	Output in High state	–32	mA
		Output in Low state	64	
T_{stg}	Storage temperature range		–65 to 150	°C

NOTES:
1. Stresses beyond those listed may cause permanent damage to the device. These are stress ratings only and functional operation of the device at these or any other conditions beyond those indicated under “recommended operating conditions” is not implied. Exposure to absolute-maximum-rated conditions for extended periods may affect device reliability.
2. The performance capability of a high-performance integrated circuit in conjunction with its thermal environment can create junction temperatures which are detrimental to reliability. The maximum junction temperature of this integrated circuit should not exceed 150°C.
3. The input and output negative voltage ratings may be exceeded if the input and output clamp current ratings are observed.

RECOMMENDED OPERATING CONDITIONS

SYMBOL	PARAMETER	LIMITS		UNIT
		MIN	MAX	
V_{CC}	DC supply voltage	2.7	3.6	V
V_I	Input voltage	0	5.5	V
V_{IH}	High-level input voltage	2.0		V
V_{IL}	Low-level Input voltage		0.8	V
I_{OH}	High-level output current		–20	mA
I_{OL}	Low-level output current		32	mA
$\Delta t/\Delta v$	Input transition rise or fall rate; Outputs enabled		10	ns/V
T_{amb}	Operating free-air temperature range	–40	+85	°C

DC ELECTRICAL CHARACTERISTICS

Over recommended operating conditions
Voltages are referenced to GND (ground = 0V)

SYMBOL	PARAMETER	TEST CONDITIONS	LIMITS Temp = -40°C to +85°C			UNIT
			MIN	TYP[1]	MAX	
V_{IK}	Input clamp voltage	V_{CC} = 2.7V; I_{IK} = –18mA			–1.2	V
V_{OH}	High-level output voltage	V_{CC} = 2.7 to 3.6V; I_{OH} = –100µA	V_{CC}–0.2			V
		V_{CC} = 2.7V; I_{OH} = –6mA	2.4			
		V_{CC} = 3.0V; I_{OH} = –20mA	2.0			
V_{OL}	Low-level output voltage	V_{CC} = 2.7V; I_{OL} = 100µA			0.2	V
		V_{CC} = 2.7V; I_{OL} = 24mA			0.5	
		V_{CC} = 3.0V; I_{OL} = 32mA			0.5	
I_I	Input leakage current	V_{CC} = 0 or 3.6V; V_I = 5.5V			10	µA
		V_{CC} = 3.6V; V_I = V_{CC} or GND			±1	
I_{OFF}	Output off current	V_{CC} = 0V; V_I or V_O = 0 to 4.5V			±100	µA
I_{CC}	Quiescent supply current	V_{CC} = 3.6V; Outputs High, V_I = GND or V_{CC}, I_O = 0		0.5	1	mA
ΔI_{CC}	Additional supply current per input pin[2]	V_{CC} = 3V to 3.6V; One input at V_{CC}–0.6V, Other inputs at V_{CC} or GND			0.2	µA
C_I	Input capacitance	V_I = 3V or 0		3		pF

NOTES:
1. All typical values are at V_{CC} = 3.3V and T_{amb} = 25°C.
2. This is the increase in supply current for each input at the specificed voltage level other than V_{CC} or GND.

AC CHARACTERISTICS

GND = 0V; t_R = t_F = 2.5ns; C_L = 50pF, R_L = 500Ω; T_{amb} = –40°C to +85°C.

SYMBOL	PARAMETER	WAVEFORM	LIMITS V_{CC} = 3.3V ± 0.3V			V_{CC} = 2.7V	UNIT
			MIN	TYP[1]	MAX	MAX	
f_{MAX}	Maximum clock frequency	1	150	345			MHz
t_{PLH} t_{PHL}	Propagation delay CPn to Qn or $\overline{Q}$n	1	1.0 1.0	3.1 3.6	4.8 5.0	5.8 5.0	ns
t_{PLH} t_{PHL}	Propagation delay $\overline{S}$Dn, $\overline{R}$Dn to Qn or $\overline{Q}$n	2	1.0 1.0	3.1 3.0	5.0 4.4	6.2 4.8	ns

NOTE:
1. All typical values are at V_{CC} = 3.3V and T_{amb} = 25°C.

AC SETUP REQUIREMENTS

SYMBOL	PARAMETER	WAVEFORM	LIMITS V_{CC} = 3.3V ± 0.3V		V_{CC} = 2.7V	UNIT
			MIN	TYP	MIN	
t_S (H) t_S (L)	Setup time Dn to CPn	1	1.7 1.4	0.6 0.4	1.8 1.6	ns
t_h (H) t_h (L)	Holdtime Dn to CPn	1	0.3 0	–0.3 –0.6	0.3 0	ns
t_W (H) t_W (L)	CPn Pulse Width	1	2.0 2.0	1.0 1.2	3.0 3.0	
t_W (L)	$\overline{S}$Dn, $\overline{R}$Dn Pulse Width	2	2.0	1.0	3.0	ns
t_{rec}	Recovery time $\overline{S}$Dn, $\overline{R}$Dn tp CPn	3	0.5	–0.3	0.5	

AC WAVEFORMS

V_M = 1.5V, V_{IN} = GND to 2.7V

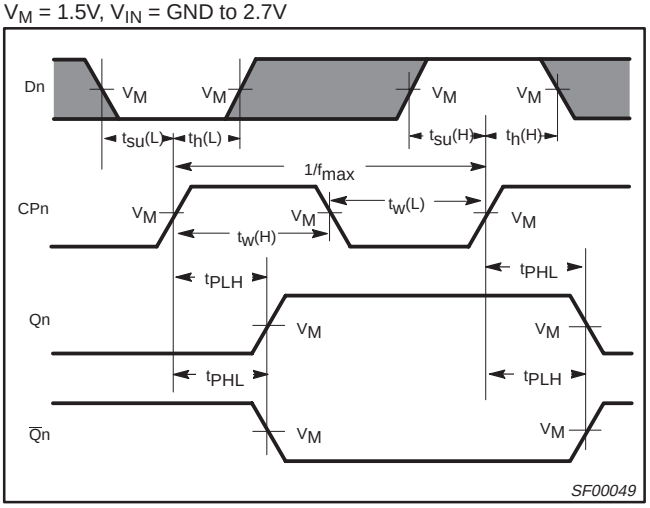

Waveform 1. Propagation delay for data to output, data setup time and hold times, and clock width, and maximum clock frequency

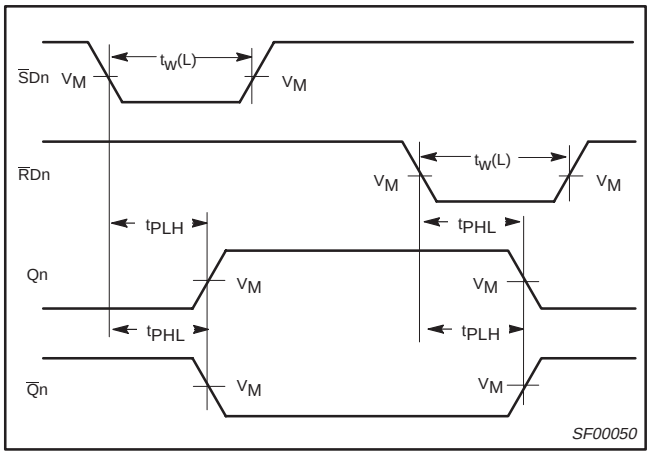

Waveform 2. Propagation delay for set and reset to output, set and reset pulse width

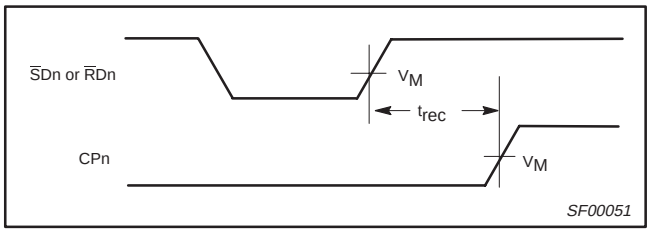

Waveform 3. Recovery time for set or reset to clock

TEST CIRCUIT AND WAVEFORMS

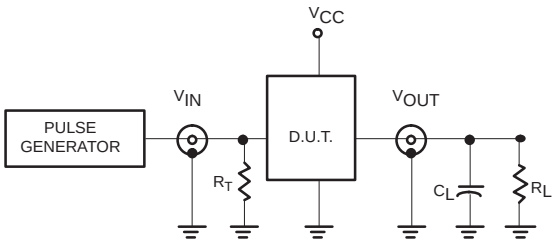

Test Circuit for Outputs

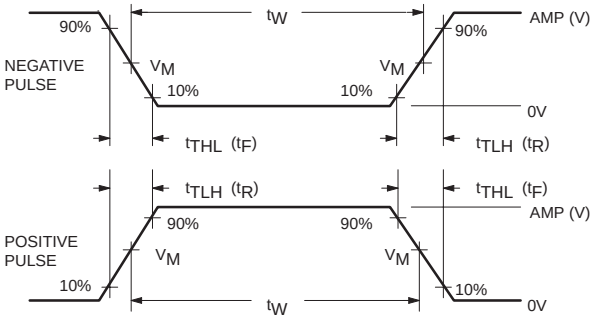

V_M = 1.5V
Input Pulse Definition

DEFINITIONS

R_L = Load resistor; see AC CHARACTERISTICS for value.

C_L = Load capacitance includes jig and probe capacitance; see AC CHARACTERISTICS for value.

R_T = Termination resistance should be equal to Z_{OUT} of pulse generators.

FAMILY	INPUT PULSE REQUIREMENTS				
	Amplitude	Rep. Rate	t_W	t_R	t_F
74LVT	2.7V	≤10MHz	500ns	≤2.5ns	≤2.5ns

SV00022

SO14: plastic small outline package; 14 leads; body width 3.9 mm SOT108-1

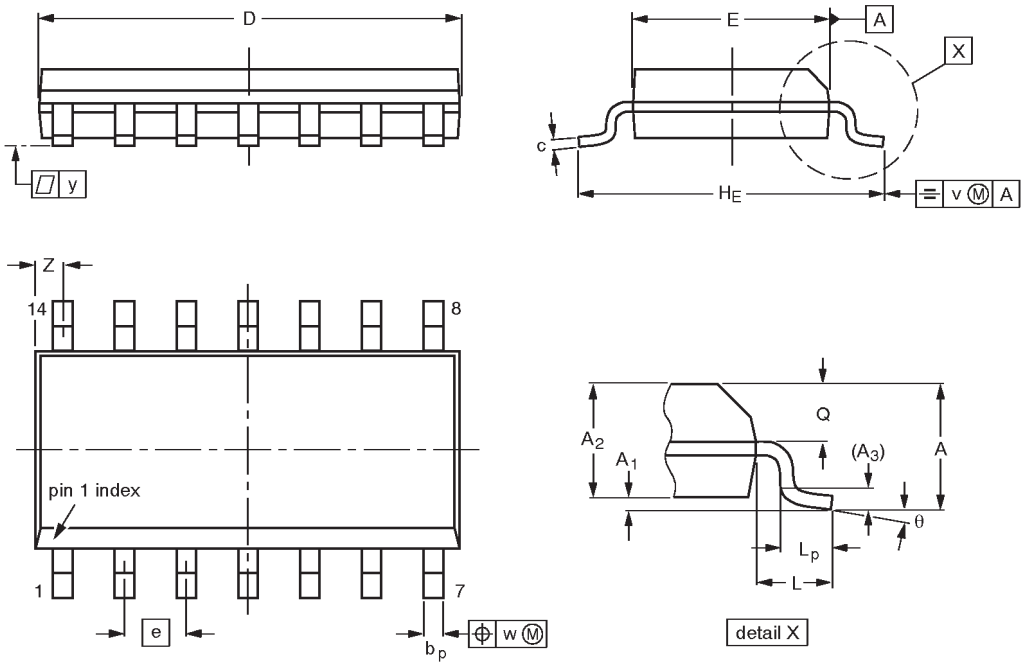

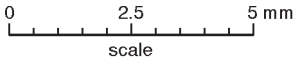

DIMENSIONS (inch dimensions are derived from the original mm dimensions)

UNIT	A max.	A_1	A_2	A_3	b_p	c	D(1)	E(1)	e	H_E	L	L_p	Q	v	w	y	Z(1)	θ
mm	1.75	0.25 0.10	1.45 1.25	0.25	0.49 0.36	0.25 0.19	8.75 8.55	4.0 3.8	1.27	6.2 5.8	1.05	1.0 0.4	0.7 0.6	0.25	0.25	0.1	0.7 0.3	8° 0°
inches	0.069	0.0098 0.0039	0.057 0.049	0.01	0.019 0.014	0.0098 0.0075	0.35 0.34	0.16 0.15	0.050	0.24 0.23	0.041	0.039 0.016	0.028 0.024	0.01	0.01	0.004	0.028 0.012	

Note

1. Plastic or metal protrusions of 0.15 mm maximum per side are not included.

OUTLINE VERSION	REFERENCES				EUROPEAN PROJECTION	ISSUE DATE
	IEC	JEDEC	EIAJ			
SOT108-1	076E06S	MS-012AB				~~91-08-13~~ 95-01-23

SSOP14: plastic shrink small outline package; 14 leads; body width 5.3 mm **SOT337-1**

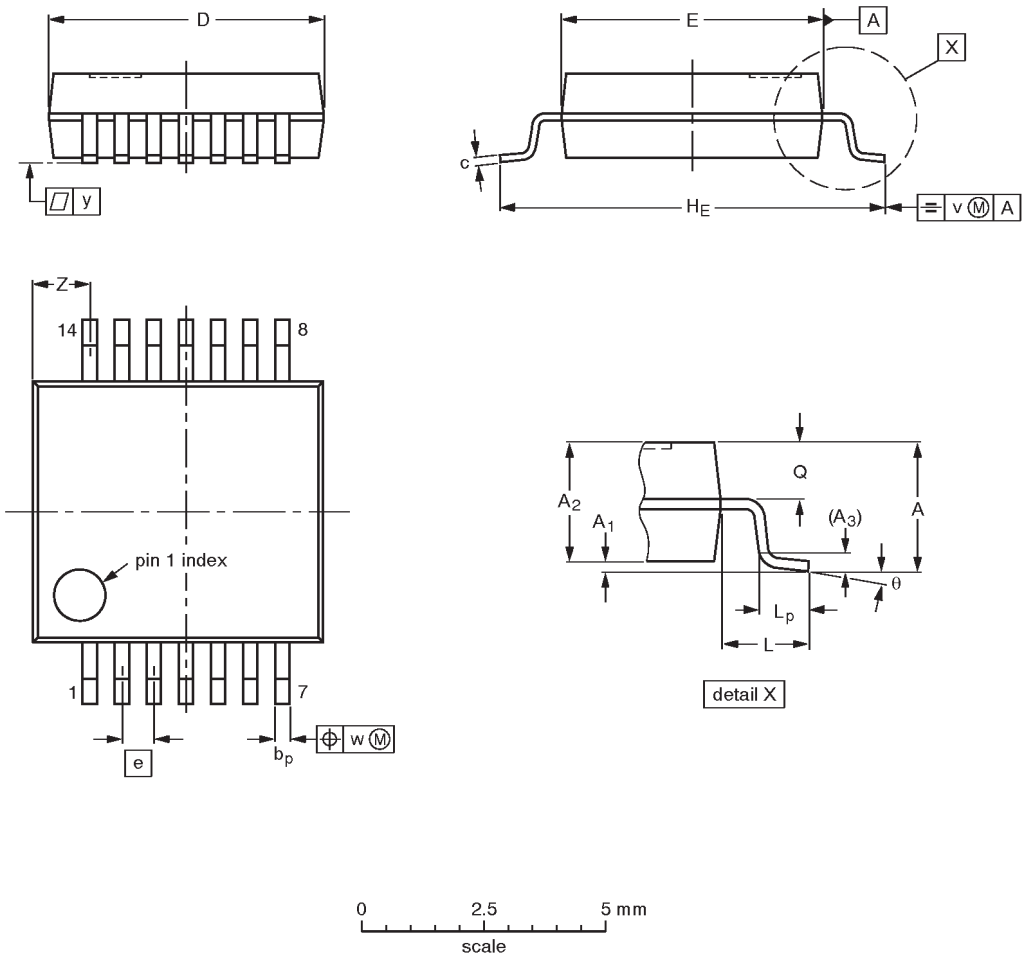

DIMENSIONS (mm are the original dimensions)

UNIT	A max.	A_1	A_2	A_3	b_p	c	D (1)	E (1)	e	H_E	L	L_p	Q	v	w	y	Z (1)	θ
mm	2.0	0.21 0.05	1.80 1.65	0.25	0.38 0.25	0.20 0.09	6.4 6.0	5.4 5.2	0.65	7.9 7.6	1.25	1.03 0.63	0.9 0.7	0.2	0.13	0.1	1.4 0.9	8° 0°

Note

1. Plastic or metal protrusions of 0.25 mm maximum per side are not included.

OUTLINE VERSION	REFERENCES				EUROPEAN PROJECTION	ISSUE DATE
	IEC	JEDEC	EIAJ			
SOT337-1		MO-150AB				~~95-02-04~~ 96-01-18

TSSOP14: plastic thin shrink small outline package; 14 leads; body width 4.4 mm **SOT402-1**

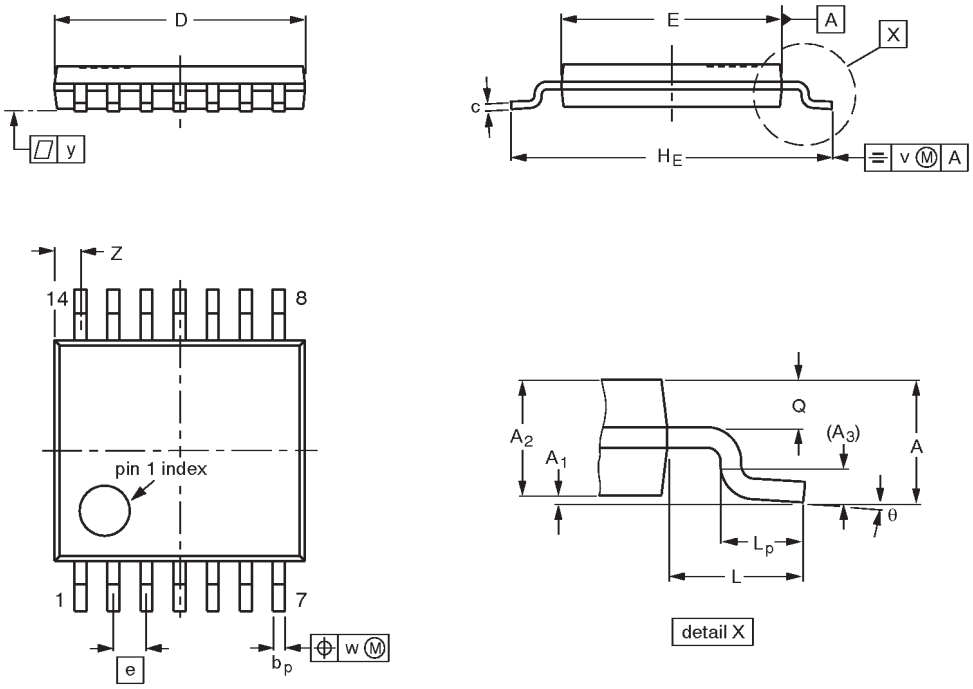

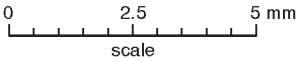

DIMENSIONS (mm are the original dimensions)

UNIT	A max.	A_1	A_2	A_3	b_p	c	D (1)	E (2)	e	H_E	L	L_p	Q	v	w	y	Z (1)	θ
mm	1.10	0.15 0.05	0.95 0.80	0.25	0.30 0.19	0.2 0.1	5.1 4.9	4.5 4.3	0.65	6.6 6.2	1.0	0.75 0.50	0.4 0.3	0.2	0.13	0.1	0.72 0.38	8° 0°

Notes

1. Plastic or metal protrusions of 0.15 mm maximum per side are not included.
2. Plastic interlead protrusions of 0.25 mm maximum per side are not included.

OUTLINE VERSION	REFERENCES				EUROPEAN PROJECTION	ISSUE DATE
	IEC	JEDEC	EIAJ			
SOT402-1		MO-153				~~94-07-12~~ 95-04-04

NOTES

DEFINITIONS

Data Sheet Identification	Product Status	Definition
Objective Specification	**Formative or in Design**	This data sheet contains the design target or goal specifications for product development. Specifications may change in any manner without notice.
Preliminary Specification	**Preproduction Product**	This data sheet contains preliminary data, and supplementary data will be published at a later date. Philips Semiconductors reserves the right to make changes at any time without notice in order to improve design and supply the best possible product.
Product Specification	**Full Production**	This data sheet contains Final Specifications. Philips Semiconductors reserves the right to make changes at any time without notice, in order to improve design and supply the best possible product.

Philips Semiconductors and Philips Electronics North America Corporation reserve the right to make changes, without notice, in the products, including circuits, standard cells, and/or software, described or contained herein in order to improve design and/or performance. Philips Semiconductors assumes no responsibility or liability for the use of any of these products, conveys no license or title under any patent, copyright, or mask work right to these products, and makes no representations or warranties that these products are free from patent, copyright, or mask work right infringement, unless otherwise specified. Applications that are described herein for any of these products are for illustrative purposes only. Philips Semiconductors makes no representation or warranty that such applications will be suitable for the specified use without further testing or modification.

LIFE SUPPORT APPLICATIONS
Philips Semiconductors and Philips Electronics North America Corporation Products are not designed for use in life support appliances, devices, or systems where malfunction of a Philips Semiconductors and Philips Electronics North America Corporation Product can reasonably be expected to result in a personal injury. Philips Semiconductors and Philips Electronics North America Corporation customers using or selling Philips Semiconductors and Philips Electronics North America Corporation Products for use in such applications do so at their own risk and agree to fully indemnify Philips Semiconductors and Philips Electronics North America Corporation for any damages resulting from such improper use or sale.

Philips Semiconductors
811 East Arques Avenue
P.O. Box 3409
Sunnyvale, California 94088–3409
Telephone 800-234-7381

Philips Semiconductors and Philips Electronics North America Corporation register eligible circuits under the Semiconductor Chip Protection Act.
© Copyright Philips Electronics North America Corporation 1996
All rights reserved. Printed in U.S.A.