FAIRCHILD SEMICONDUCTOR™

April 1988
Revised September 2000

74F37
Quad Two-Input NAND Buffer

General Description

This device contains four independent gates, each of which performs the logic NAND function.

Ordering Code:

Order Number	Package Number	Package Description
74F37SC	M14A	14-Lead Small Outline Integrated Circuit (SOIC), JEDEC MS-120, 0.150 Narrow
74F37SJ	M14D	14-Lead Small Outline Package (SOP), EIAJ TYPE II, 5.3mm Wide
74F37PC	N14A	14-Lead Plastic Dual-In-Line Package (PDIP), JEDEC MS-001, 0.300 Wide

Devices also available in Tape and Reel. Specify by appending the suffix letter "X" to the ordering code.

Logic Symbol

IEEE/IEC

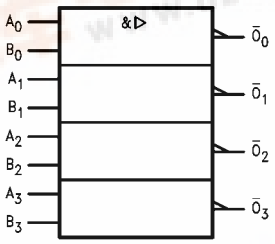

Connection Diagram

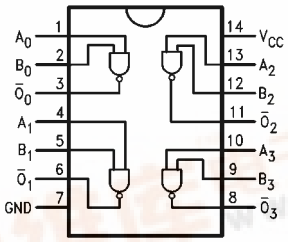

Unit Loading/Fan Out

Pin Names	Description	U.L. HIGH/LOW	Input I_{IH}/I_{IL} Output I_{OH}/I_{OL}
A_n, B_n	Inputs	1.0/2.0	20 µA/−1.2 mA
$\overline{O}_n$	Outputs	600/106.6 (80)	−12 mA/64 mA (48 mA)

Function Table

Inputs		Output
A	B	$\overline{O}$
L	L	H
L	H	H
H	L	H
H	H	L

H = HIGH Voltage Level
L = LOW Voltage Level

Absolute Maximum Ratings (Note 1)

Storage Temperature	–65°C to +150°C
Ambient Temperature under Bias	–55°C to +125°C
Junction Temperature under Bias	–55°C to +150°C
V_{CC} Pin Potential to Ground Pin	–0.5V to +7.0V
Input Voltage (Note 2)	–0.5V to +7.0V
Input Current (Note 2)	–30 mA to +5.0 mA
Voltage Applied to Output	
in HIGH State (with V_{CC} = 0V)	
Standard Output	–0.5V to V_{CC}
3-STATE Output	–0.5V to +5.5V
Current Applied to Output	
in LOW State (Max)	twice the rated I_{OL} (mA)

Recommended Operating Conditions

Free Air Ambient Temperature	0°C to +70°C
Supply Voltage	+4.5V to +5.5V

Note 1: Absolute maximum ratings are values beyond which the device may be damaged or have its useful life impaired. Functional operation under these conditions is not implied.

Note 2: Either voltage limit or current limit is sufficient to protect inputs.

DC Electrical Characteristics

Symbol	Parameter		Min	Typ	Max	Units	V_{CC}	Conditions
V_{IH}	Input HIGH Voltage		2.0			V		Recognized as a HIGH Signal
V_{IL}	Input LOW Voltage				0.8	V		Recognized as a LOW Signal
V_{CD}	Input Clamp Diode Voltage				–1.2	V	Min	I_{IN} = –18 mA
V_{OH}	Output HIGH Voltage	10% V_{CC}	2.4			V	Min	I_{OH} = –3 mA
		10% V_{CC}	2.0					I_{OH} = –15 mA
		5% V_{CC}	2.7					I_{OH} = –3 mA
V_{OL}	Output LOW Voltage	10% V_{CC}			0.55	V	Min	I_{OL} = 64 mA
I_{IH}	Input HIGH Current				5.0	µA	Max	V_{IN} = 2.7V
I_{BVI}	Input HIGH Current Breakdown Test				7.0	µA	Max	V_{IN} = 7.0V
I_{CEX}	Output HIGH Leakage Current				50	µA	Max	V_{OUT} = V_{CC}
V_{ID}	Input Leakage Test		4.75			V	0.0	I_{ID} = 1.9 µA All Other Pins Grounded
I_{OD}	Output Leakage Circuit Current				3.75	µA	0.0	V_{IOD} = 150 mV All Other Pins Grounded
I_{IL}	Input LOW Current				–1.2	mA	Max	V_{IN} = 0.5V
I_{OS}	Output Short-Circuit Current		–100		–225	mA	Max	V_{OUT} = 0V
I_{CCH}	Power Supply Current			3.7	6.0	mA	Max	V_O = HIGH
I_{CCL}	Power Supply Current			28.0	33.0	mA	Max	V_O = LOW

AC Electrical Characteristics

Symbol	Parameter	T_A = +25°C, V_{CC} = +5.0V, C_L = 50 pF			T_A = 0°C to +70°C, C_L = 50 pF		Units
		Min	Typ	Max	Min	Max	
t_{PLH}	Propagation Delay	2.0	3.2	5.5	1.5	6.5	ns
t_{PHL}	A_n, B_n to $\overline{O}_n$	1.5	2.4	4.5	1.0	5.0	

Physical Dimensions inches (millimeters) unless otherwise noted

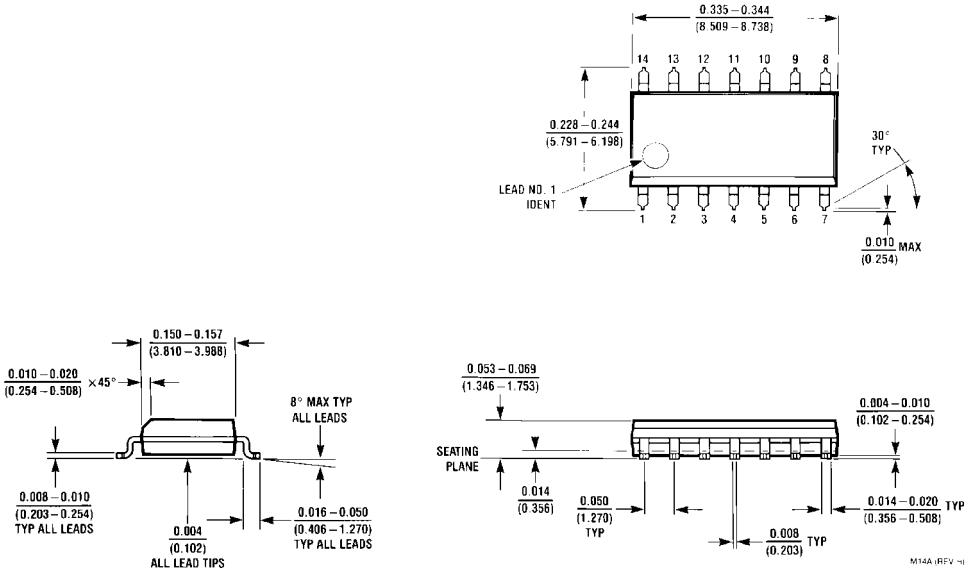

14-Lead Small Outline Integrated Circuit (SOIC), JEDEC MS-120, 0.150 Narrow
Package Number M14A

Physical Dimensions inches (millimeters) unless otherwise noted (Continued)

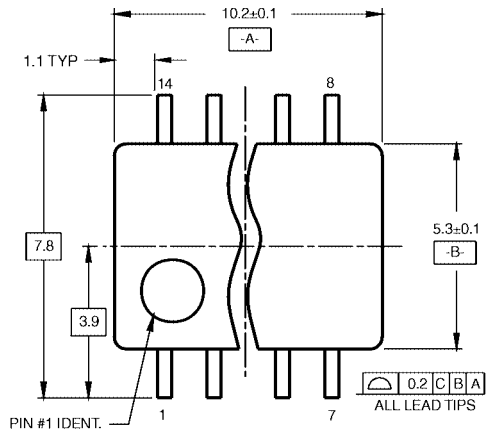

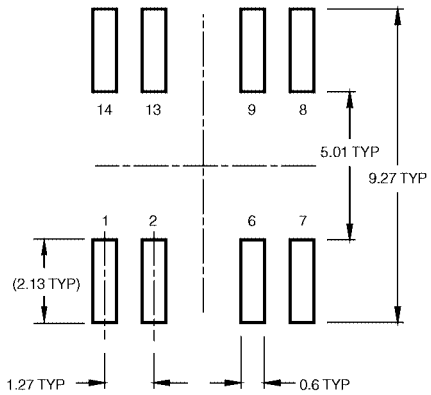

LAND PATTERN RECOMMENDATION

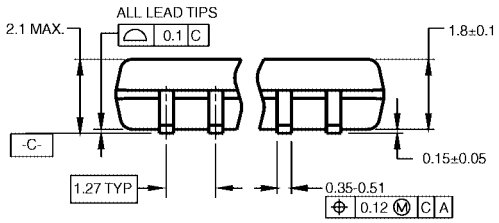

DIMENSIONS ARE IN MILLIMETERS

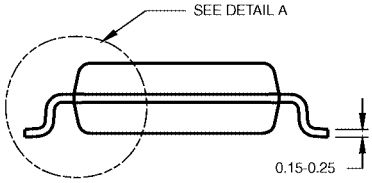

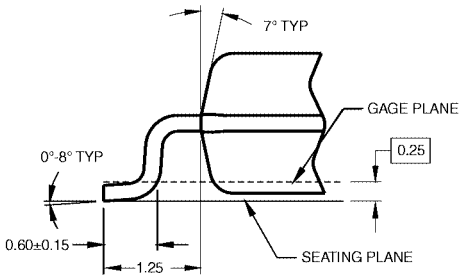

DETAIL A

NOTES:

A. CONFORMS TO EIAJ EDR-7320 REGISTRATION, ESTABLISHED IN DECEMBER, 1998.

B. DIMENSIONS ARE IN MILLIMETERS.

C. DIMENSIONS ARE EXCLUSIVE OF BURRS, MOLD FLASH, AND TIE BAR EXTRUSIONS.

M14DRevB1

14-Lead Small Outline Package (SOP), EIAJ TYPE II, 5.3mm Wide
Package Number M14D

Physical Dimensions inches (millimeters) unless otherwise noted (Continued)

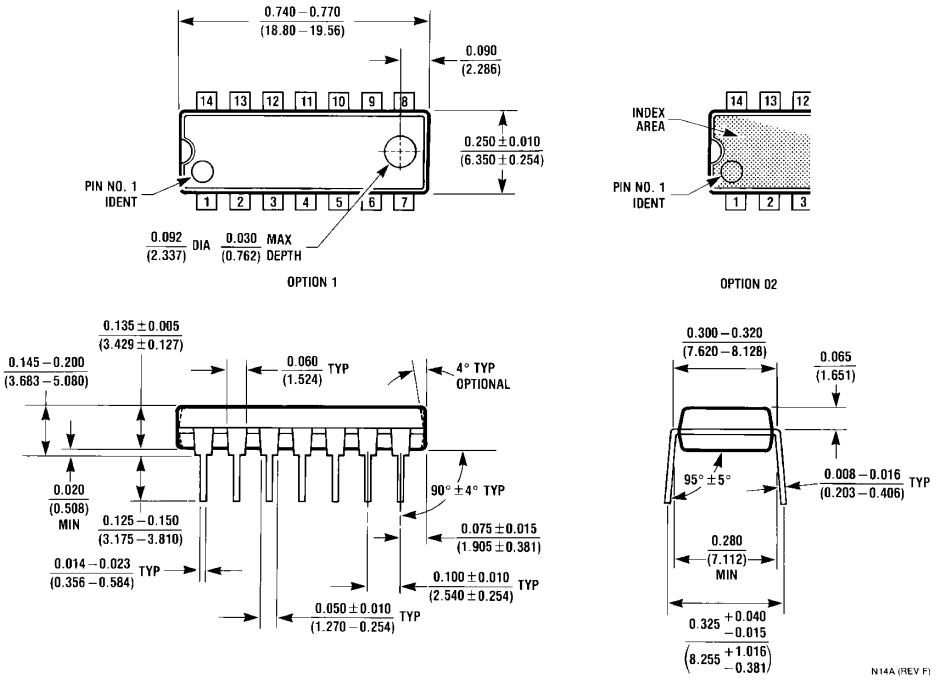

14-Lead Plastic Dual-In-Line Package (PDIP), JEDEC MS-001, 0.300 Wide
Package Number N14A