查询PMEG2015EV供应商 捷多邦，专业PCB打样工厂，24小时加急出货

DISCRETE SEMICONDUCTORS

DATA SHEET

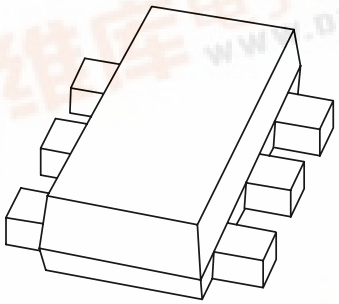

PMEG2015EV
Low V_F MEGA Schottky barrier diode

Product specification
Supersedes data of 2003 May 21

2003 Jun 03

找PDF 维库一下 pdf.dzsc.com

Philips Semiconductors

PHILIPS

Low V_F MEGA Schottky barrier diode PMEG2015EV

FEATURES

- Forward current: 1.5 A
- Reverse voltage: 20 V
- Very low forward voltage
- Ultra small plastic SMD package
- Flat leads: excellent coplanarity and improved thermal behaviour.

APPLICATIONS

- Low voltage rectification
- High efficiency DC-DC conversion
- Switch mode power supply
- Inverse polarity protection
- Low power consumption applications.

DESCRIPTION

Planar Maximum Efficiency General Application (MEGA) Schottky barrier diode with an integrated guard ring for stress protection, encapsulated in a SOT666 ultra small SMD plastic package.

PINNING

PIN	DESCRIPTION
1	cathode
2	cathode
3	anode
4	anode
5	cathode
6	cathode

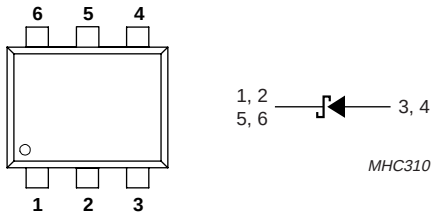

Marking code: F5.

Fig.1 Simplified outline (SOT666 and symbol).

LIMITING VALUES

In accordance with the Absolute Maximum Rating System (IEC 60134).

SYMBOL	PARAMETER	CONDITIONS	MIN.	MAX.	UNIT
V_R	continuous reverse voltage		–	20	V
I_F	continuous forward current	T_s < 55 °C	–	1.5	A
I_{FSM}	non-repetitive peak forward current	t_p = 8 ms square wave; note 1	–	10	A
I_{FRM}	repetitive peak forward current	t_p = 1 ms; δ = ≤ 0.25	–	4.5	A
T_{stg}	storage temperature		–65	+150	°C
T_j	junction temperature		–	150	°C
T_{amb}	operating ambient temperature		–65	+125	°C

Note

1. Only valid if pins 3 and 4 are connected in parallel.

ELECTRICAL CHARACTERISTICS

T_{amb} = 25 °C unless otherwise specified.

SYMBOL	PARAMETER	CONDITIONS	TYP.	MAX.	UNIT
V_F	continuous forward voltage	see Fig.2; note 1			
		I_F = 10 mA	240	270	mV
		I_F = 100 mA	300	350	mV
		I_F = 1000 mA	480	550	mV
		I_F = 1500 mA	530	660	mV
I_R	continuous reverse current	see Fig.3; note 2			
		V_R = 5 V	5	10	µA
		V_R = 8 V	7	20	µA
		V_R = 15 V	10	50	µA
C_d	diode capacitance	V_R = 5 V; f = 1 MHz; see Fig.4	19	25	pF

Notes

1. Only valid if pins 1, 2 and 5, 6 are soldered on 1 cm^2 copper solder land.
2. Pulse test: t_p = 300 µs; δ = 0.02.

THERMAL CHARACTERISTICS

SYMBOL	PARAMETER	CONDITIONS	VALUE	UNIT
$R_{th\ j\text{-}a}$	thermal resistance from junction to ambient	note 1	405	K/W
		note 2	215	K/W
$R_{th\ j\text{-}s}$	thermal resistance from junction to solder point	note 3	80	K/W

Notes

1. Refer to SOT666 standard mounting conditions.
2. Device mounted on a printed-circuit board, single-sided copper, tinplated, mounting pad for cathode 1 cm^2.
3. Soldering point of cathode tabs.

Soldering

Reflow soldering is the only recommended soldering method.

GRAPHICAL DATA

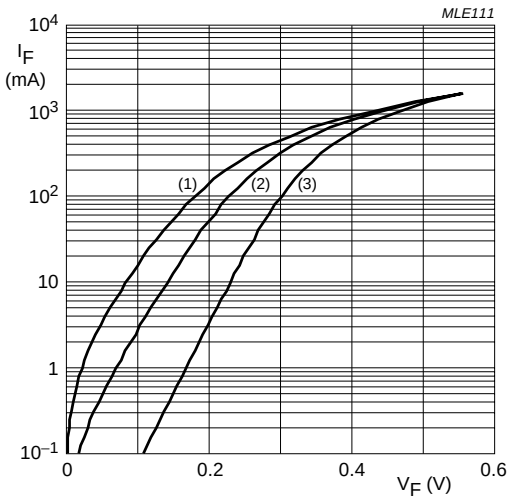

(1) T_{amb} = 125 °C.
(2) T_{amb} = 85 °C.
(3) T_{amb} = 25 °C.

Fig.2 Forward current as a function of forward voltage; typical values.

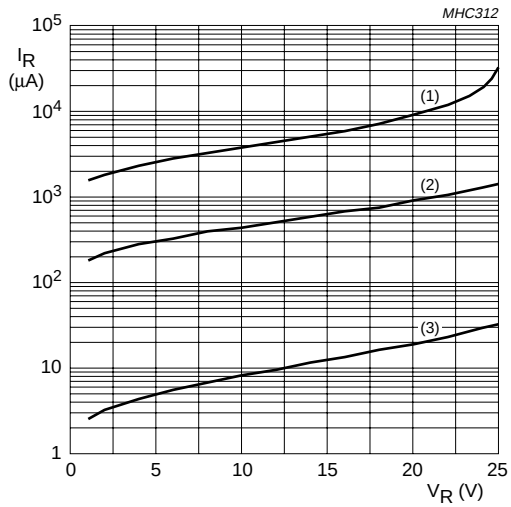

(1) T_{amb} = 125 °C.
(2) T_{amb} = 85 °C.
(3) T_{amb} = 25 °C.

Fig.3 Reverse current as a function of reverse voltage; typical values.

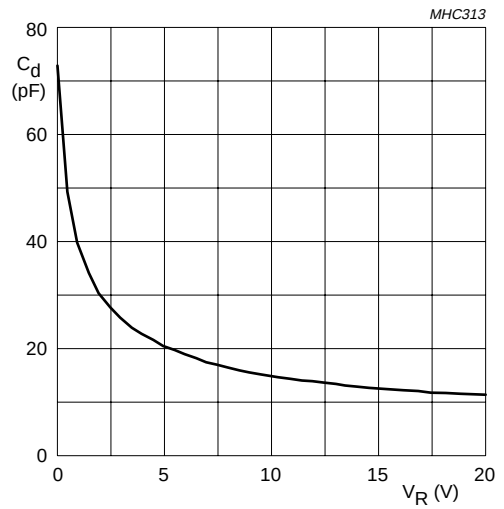

f = 1 MHz; T_{amb} = 25 °C.

Fig.4 Diode capacitance as a function of reverse voltage; typical values.

PACKAGE OUTLINE

Plastic surface mounted package; 6 leads **SOT666**

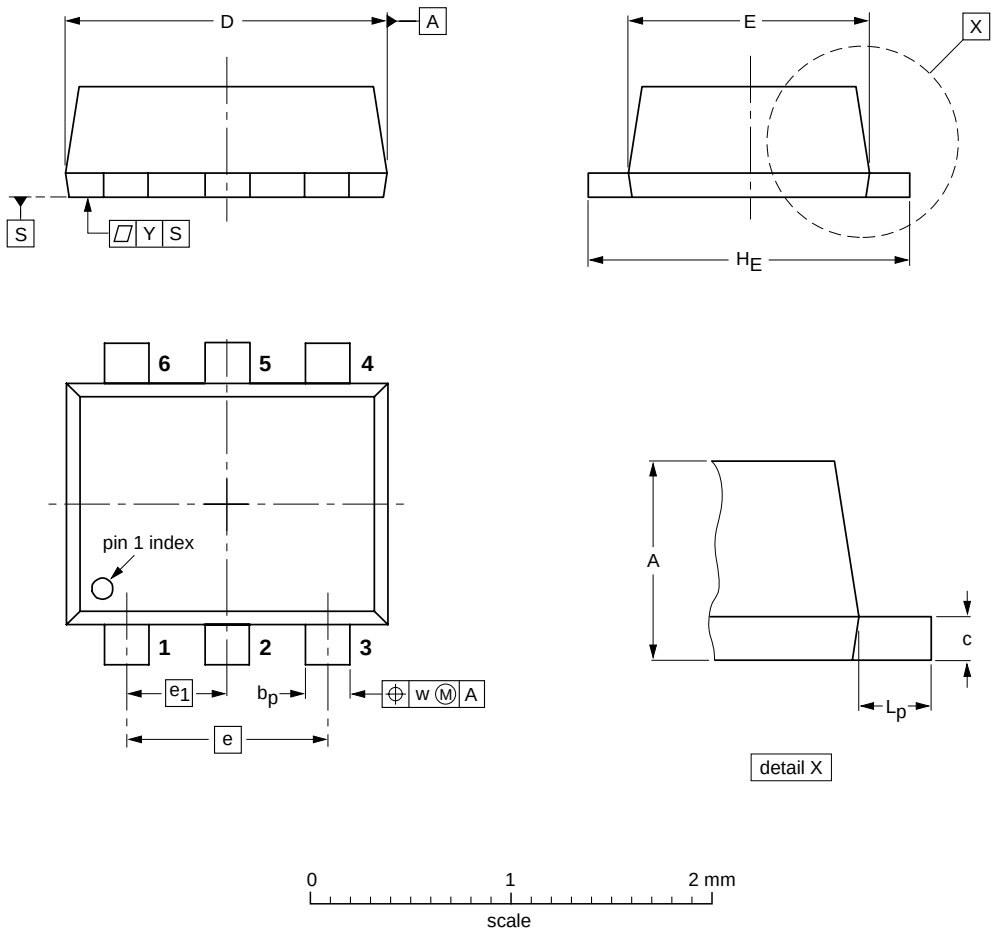

DIMENSIONS (mm are the original dimensions)

UNIT	A	b_p	c	D	E	e	e_1	H_E	L_p	w	y
mm	0.6 0.5	0.27 0.17	0.18 0.08	1.7 1.5	1.3 1.1	1.0	0.5	1.7 1.5	0.3 0.1	0.1	0.1

OUTLINE VERSION	REFERENCES				EUROPEAN PROJECTION	ISSUE DATE
	IEC	JEDEC	EIAJ			
SOT666						~~01-01-04~~ 01-08-27

DATA SHEET STATUS

LEVEL	DATA SHEET STATUS(1)	PRODUCT STATUS(2)(3)	DEFINITION
I	Objective data	Development	This data sheet contains data from the objective specification for product development. Philips Semiconductors reserves the right to change the specification in any manner without notice.
II	Preliminary data	Qualification	This data sheet contains data from the preliminary specification. Supplementary data will be published at a later date. Philips Semiconductors reserves the right to change the specification without notice, in order to improve the design and supply the best possible product.
III	Product data	Production	This data sheet contains data from the product specification. Philips Semiconductors reserves the right to make changes at any time in order to improve the design, manufacturing and supply. Relevant changes will be communicated via a Customer Product/Process Change Notification (CPCN).

Notes

1. Please consult the most recently issued data sheet before initiating or completing a design.
2. The product status of the device(s) described in this data sheet may have changed since this data sheet was published. The latest information is available on the Internet at URL http://www.semiconductors.philips.com.
3. For data sheets describing multiple type numbers, the highest-level product status determines the data sheet status.

DEFINITIONS

Short-form specification — The data in a short-form specification is extracted from a full data sheet with the same type number and title. For detailed information see the relevant data sheet or data handbook.

Limiting values definition — Limiting values given are in accordance with the Absolute Maximum Rating System (IEC 60134). Stress above one or more of the limiting values may cause permanent damage to the device. These are stress ratings only and operation of the device at these or at any other conditions above those given in the Characteristics sections of the specification is not implied. Exposure to limiting values for extended periods may affect device reliability.

Application information — Applications that are described herein for any of these products are for illustrative purposes only. Philips Semiconductors make no representation or warranty that such applications will be suitable for the specified use without further testing or modification.

DISCLAIMERS

Life support applications — These products are not designed for use in life support appliances, devices, or systems where malfunction of these products can reasonably be expected to result in personal injury. Philips Semiconductors customers using or selling these products for use in such applications do so at their own risk and agree to fully indemnify Philips Semiconductors for any damages resulting from such application.

Right to make changes — Philips Semiconductors reserves the right to make changes in the products - including circuits, standard cells, and/or software - described or contained herein in order to improve design and/or performance. When the product is in full production (status ‘Production’), relevant changes will be communicated via a Customer Product/Process Change Notification (CPCN). Philips Semiconductors assumes no responsibility or liability for the use of any of these products, conveys no licence or title under any patent, copyright, or mask work right to these products, and makes no representations or warranties that these products are free from patent, copyright, or mask work right infringement, unless otherwise specified.

NOTES

Philips Semiconductors – a worldwide company

Contact information

For additional information please visit **http://www.semiconductors.philips.com**. Fax: **+31 40 27 24825**
For sales offices addresses send e-mail to: **sales.addresses@www.semiconductors.philips.com**.

© Koninklijke Philips Electronics N.V. 2003 SCA75

All rights are reserved. Reproduction in whole or in part is prohibited without the prior written consent of the copyright owner.
The information presented in this document does not form part of any quotation or contract, is believed to be accurate and reliable and may be changed without notice. No liability will be accepted by the publisher for any consequence of its use. Publication thereof does not convey nor imply any license under patent- or other industrial or intellectual property rights.

Printed in The Netherlands 613514/02/pp8 Date of release: 2003 Jun 03 Document order number: 9397 750 11556

Let's make things better.

Philips Semiconductors

PHILIPS