PD -2.460A

International
IOR Rectifier

HFA70NK60C

HEXFRED™

Ultrafast, Soft Recovery Diode

Features

- Reduced RFI and EMI
- Reduced Snubbing
- Extensive Characterization of Recovery Parameters

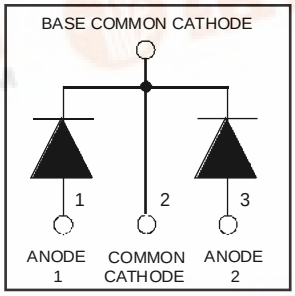

V_R = 600V
V_F(typ.)③ = 1.2V
$I_{F(AV)}$ = 70A
Q_{rr} (typ.) = 210nC
I_{RRM}(typ.) = 6A
t_{rr}(typ.) = 30ns
$di_{(rec)M}/dt$ (typ.)③ = 180A/µs

Description

HEXFRED™ diodes are optimized to reduce losses and EMI/RFI in high frequency power conditioning systems. An extensive characterization of the recovery behavior for different values of current, temperature and di/dt simplifies the calculations of losses in the operating conditions. The softness of the recovery eliminates the need for a snubber in most applications. These devices are ideally suited for power converters, motors drives and other applications where switching losses are significant portion of the total losses.

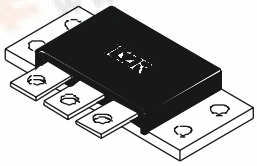

TO-249AA (MODIFIED)

Absolute Maximum Ratings (per Leg)

	Parameter	Max.	Units
V_R	Cathode-to-Anode Voltage	600	V
I_F @ T_C = 25°C	Continuous Forward Current	59	A
I_F @ T_C = 100°C	Continuous Forward Current	29	
I_{FSM}	Single Pulse Forward Current ①	200	
I_{AS}	Maximum Single Pulse Avalanche Current ②	2.0	
E_{AS}	Non-Repetitive Avalanche Energy ②	220	µJ
P_D @ T_C = 25°C	Maximum Power Dissipation	160	W
P_D @ T_C = 100°C	Maximum Power Dissipation	63	
T_J T_{STG}	Operating Junction and Storage Temperature Range	-55 to +150	°C
	Soldering Temperature, for 10 sec.	300 (0.063 in. (1.6mm) from case)	

Thermal - Mechanical Characteristics

	Parameter	Min.	Typ.	Max.	Units
$R_{\theta JC}$	Junction-to-Case, Single Leg Conducting	–––	–––	0.80	°C/W K/W
	Junction-to-Case, Both Legs Conducting	–––	–––	0.40	
$R_{\theta CS}$	Case-to-Sink, Flat, Greased Surface	–––	0.10	–––	
Wt	Weight	–––	58 (2.0)	–––	g (oz)
	Mounting Torque	35 (4.0)	–––	50 (5.7)	lbf•in (N•m)

Note: ① Limited by junction temperature
② L = 100µH, duty cycle limited by max T_J
③ 125°C

5/5/97

Electrical Characteristics (per Leg) @ T_J = 25°C (unless otherwise specified)

	Parameter	Min.	Typ.	Max.	Units	Test Conditions	
V_{BR}	Cathode Anode Breakdown Voltage	600	–––	–––	V	I_R = 100µA	
V_{FM}	Max Forward Voltage	–––	1.3	1.5	V	I_F = 35A	See Fig. 1
		–––	1.5	1.7		I_F = 70A	
		–––	1.2	1.4		I_F = 35A, T_J = 125°C	
I_{RM}	Max Reverse Leakage Current	–––	2.0	10	µA	V_R = V_R Rated	See Fig. 2
		–––	0.50	2.0	mA	T_J = 125°C, V_R = 480V	
C_T	Junction Capacitance	–––	68	100	pF	V_R = 200V	See Fig. 3
L_S	Series Inductance	–––	9.2	–––	nH	Lead to lead 5mm from package body	

Dynamic Recovery Characteristics (per Leg) @ T_J = 25°C (unless otherwise specified)

	Parameter	Min.	Typ.	Max.	Units	Test Conditions		
t_{rr}	Reverse Recovery Time	–––	30	–––	ns	I_F = 1.0A, di_f/dt = 200A/µs, V_R = 30V		
t_{rr1}		–––	70	110		T_J = 25°C	See Fig. 5	I_F = 35A
t_{rr2}		–––	115	180		T_J = 125°C		
I_{RRM1}	Peak Recovery Current	–––	6.0	11	A	T_J = 25°C	See Fig. 6	V_R = 200V
I_{RRM2}		–––	9.0	16		T_J = 125°C		
Q_{rr1}	Reverse Recovery Charge	–––	210	580	nC	T_J = 25°C	See Fig. 7	di_f/dt = 200A/µs
Q_{rr2}		–––	520	1400		T_J = 125°C		
$di_{(rec)M}/dt1$	Peak Rate of Fall of Recovery Current	–––	280	–––	A/µs	T_J = 25°C	See Fig. 8	
$di_{(rec)M}/dt2$	During t_b	–––	180	–––		T_J = 125°C		

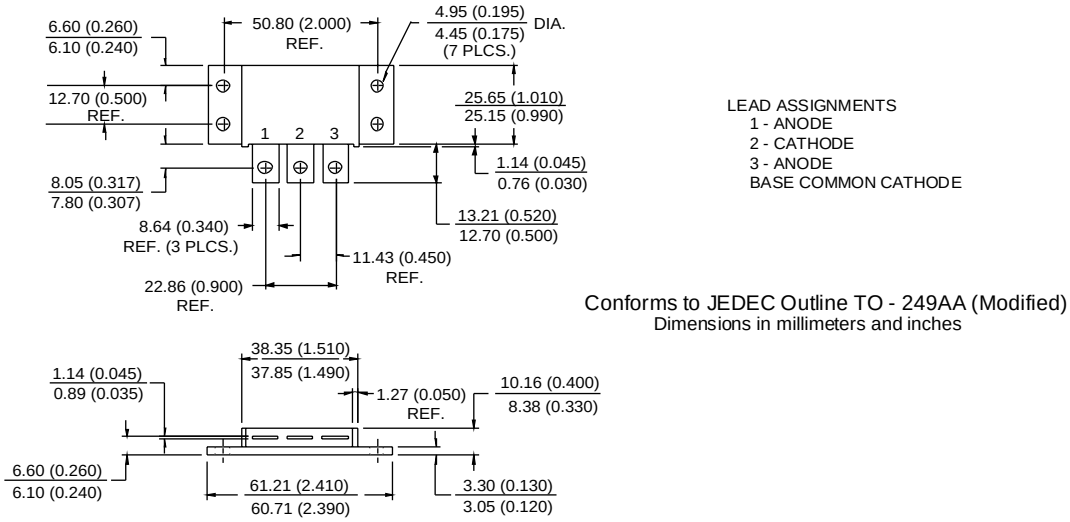

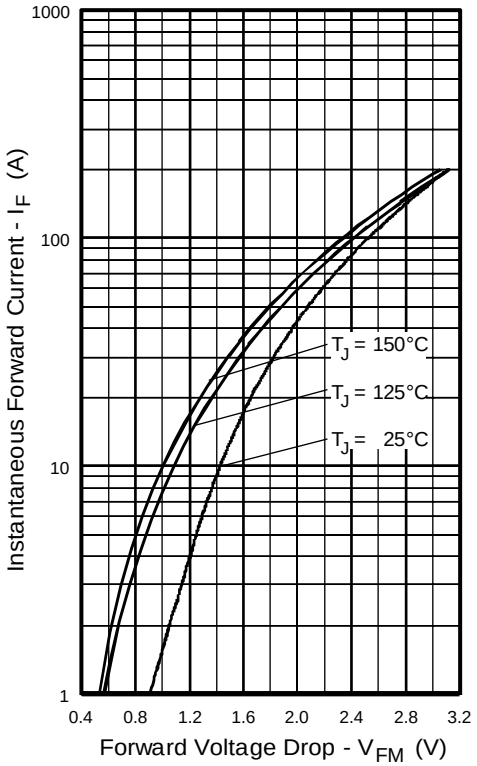

Fig. 1 - Maximum Forward Voltage Drop vs. Instantaneous Forward Current, (per Leg)

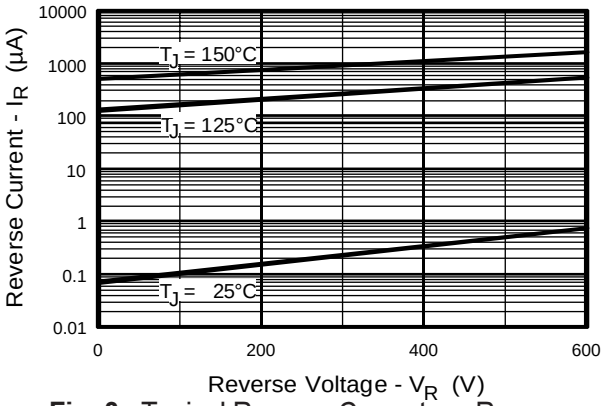

Fig. 2 - Typical Reverse Current vs. Reverse Voltage, (per Leg)

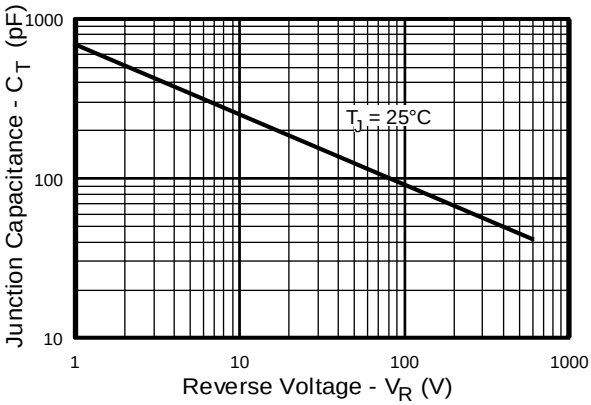

Fig. 3 - Typical Junction Capacitance vs. Reverse Voltage, (per Leg)

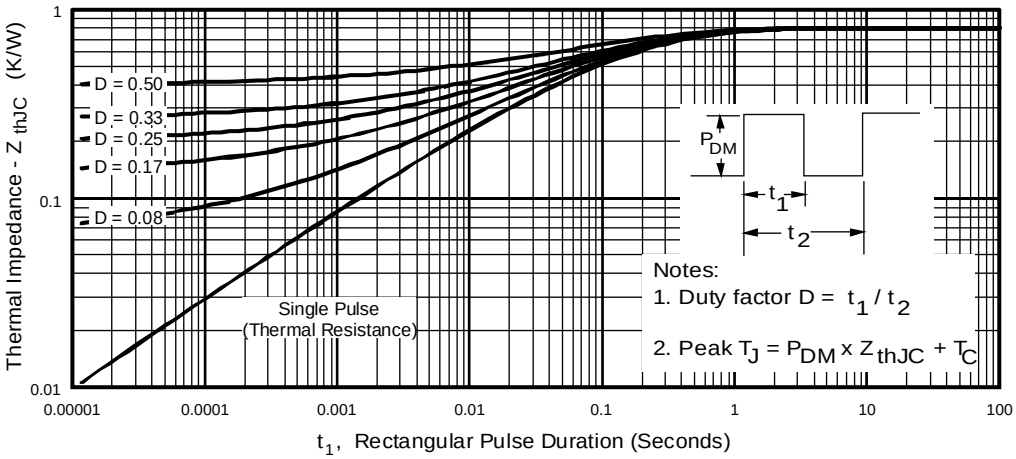

Fig. 4 - Maximum Thermal Impedance Z_{thjc} Characteristics, (per Leg)

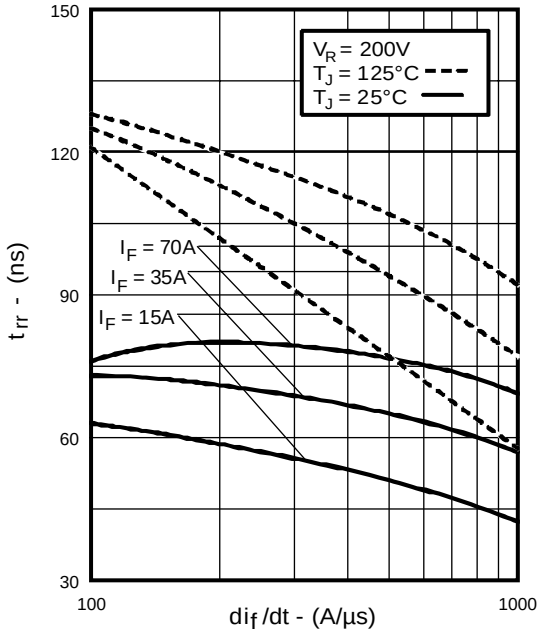

Fig. 5 - Typical Reverse Recovery vs. di_f/dt, (per Leg)

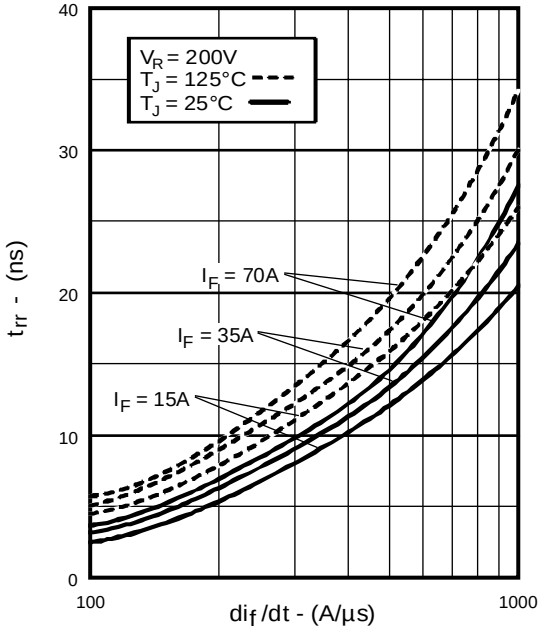

Fig. 6 - Typical Recovery Current vs. di_f/dt, (per Leg)

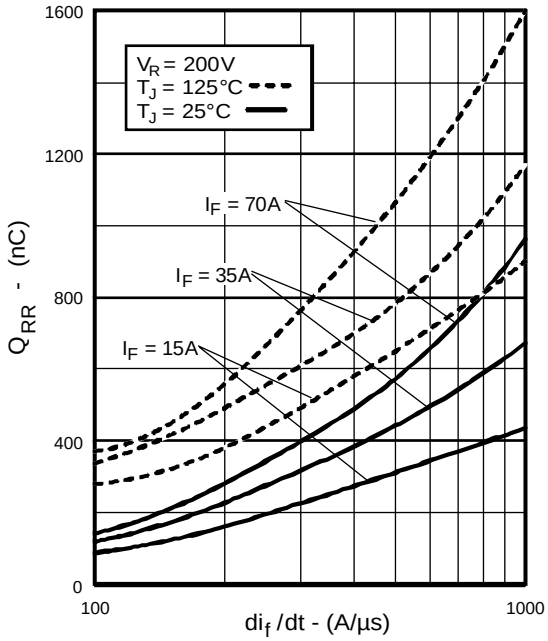

Fig. 7 - Typical Stored Charge vs. di_f/dt, (per Leg)

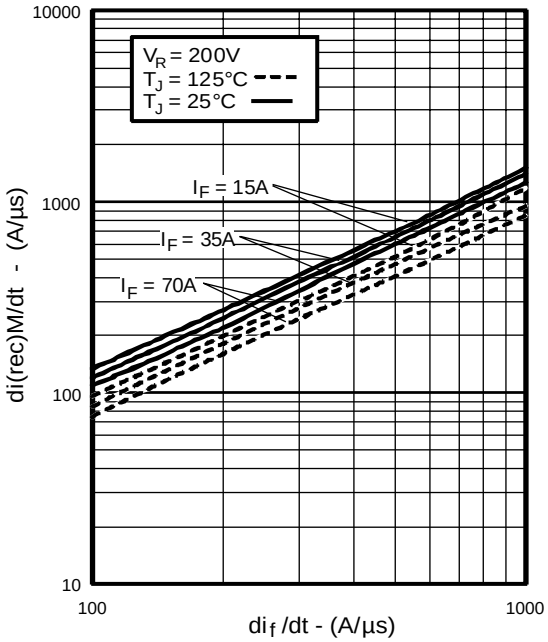

Fig. 8 - Typical $di_{(rec)M}/dt$ vs. di_f/dt, (per Leg)

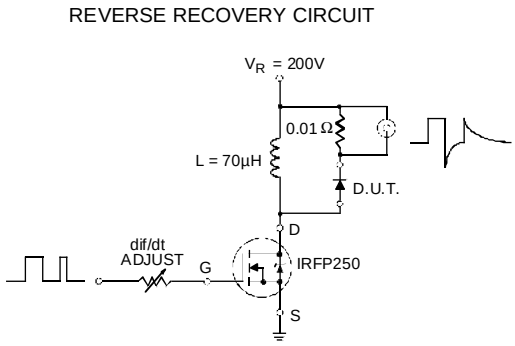

Fig. 9 - Reverse Recovery Parameter Test Circuit

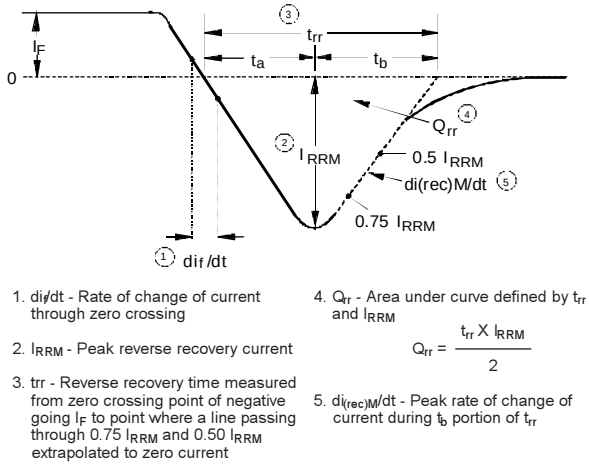

Fig. 10 - Reverse Recovery Waveform and Definitions

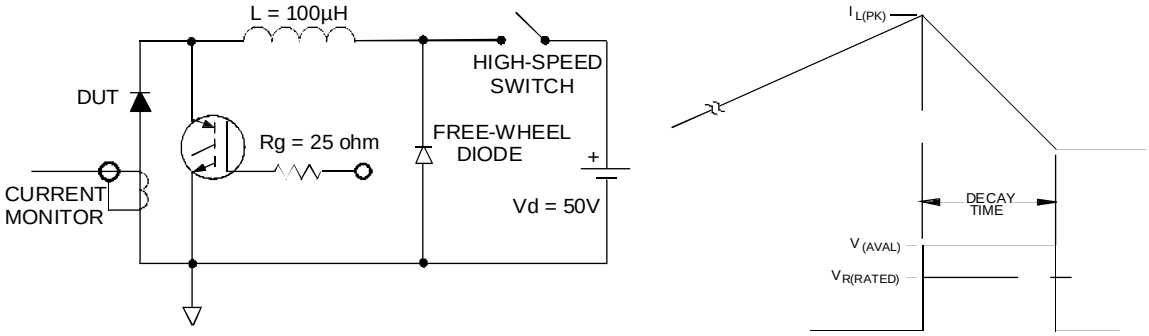

Fig. 11 - Avalanche Test Circuit and Waveforms

International
IOR Rectifier
WORLD HEADQUARTERS: 233 Kansas St., El Segundo, California 90245, Tel: (310) 322 3331
EUROPEAN HEADQUARTERS: Hurst Green, Oxted, Surrey RH8 9BB, UK Tel: ++ 44 1883 732020
IR CANADA: 7321 Victoria Park Ave., Suite 201, Markham, Ontario L3R 2Z8, Tel: (905) 475 1897
IR GERMANY: Saalburgstrasse 157, 61350 Bad Homburg Tel: ++ 49 6172 96590
IR ITALY: Via Liguria 49, 10071 Borgaro, Torino Tel: ++ 39 11 451 0111
IR FAR EAST: K&H Bldg., 2F, 30-4 Nishi-Ikebukuro 3-Chome, Toshima-Ku, Tokyo Japan 171 Tel: 81 3 3983 0086
IR SOUTHEAST ASIA: 315 Outram Road, #10-02 Tan Boon Liat Building, Singapore 0316 Tel: 65 221 8371