查询RIC7113L4供应商 捷多邦，专业PCB打样工厂，24小时加急出货

PD-93921B

International
IOR Rectifier

RIC7113L4

RADIATION HARDENED HIGH AND LOW SIDE GATE DRIVER

Features

- Total dose capability to 100K Rad (Si)
- Floating channel designed for bootstrap operation
- Fully operational to +400V
- Tolerant to negative transient voltage
- dV/dt immune
- Gate drive supply range from 10 to 20V
- Undervoltage lockout for both channels
- Separate logic supply range from 5 to 20V Logic and power ground ±5V offset
- CMOS Schmitt-triggered inputs with pull-down
- Cycle by cycle edge-triggered shutdown logic
- Matched propagation delay for both channels
- Outputs in phase with inputs
- Hermetically Sealed
- Lightweight

Product Summary

V_{OFFSET}	400V max.
$I_{O+/-}$	2A / 2A
V_{OUT}	10 - 20V
$t_{on/off}$ (typ.)	120 & 100 ns
Delay Matching(typ.)	5 ns

Description

The RIC7113L4 is a high voltage, high speed power MOSFET and IGBT driver with independent high and low side referenced output channels. Proprietary HVIC and latch immune CMOS technologies enable ruggedized monolithic construction. Logic inputs are compatible with standard CMOS or LSTTL outputs. The output drivers feature a high pulse current buffer stage designed for minimum driver cross-conduction. Propagation delays are matched to simplify use in high frequency applications. The floating channel can be used to drive an N-channel power MOSFET or IGBT in the high side configuration which operates up to 400 volts.

Absolute Maximum Ratings

Absolute Maximum Ratings indicate sustained limits beyond which damage to the device may occur. All voltage parameters are absolute voltages referenced to COM. The Thermal Resistance and Power Dissipation ratings are measured under board mounted and still air conditions.

Symbol	Parameter	Min.	Max.	Units
V_B	High Side Floating Supply Voltage	-0.5	V_S + 20	V
V_S	High Side Floating Supply Offset Voltage	—	400	
V_{HO}	High Side Floating Output Voltage	V_S - 0.5	V_B + 0.5	
V_{CC}	Low Side Fixed Supply Voltage	-0.5	20	
V_{LO}	Low Side Output Voltage	-0.5	V_{CC} + 0.5	
V_{DD}	Logic Supply Voltage	-0.5	V_{SS} + 20	
V_{SS}	Logic Supply Offset Voltage	V_{CC} - 20	V_{CC} + 0.5	
V_{IN}	Logic Input Voltage (HIN, LIN & SD)	V_{SS} - 0.5	V_{DD} + 0.5	
dV_S/dt	Allowable Offset Supply Voltage Transient (Figure 2)	—	50	V/ns
P_D	Package Power Dissipation @ T_A £ +25°C	—	1.6	W
R_{thJA}	Thermal Resistance, Junction to Ambient	—	125	°C/W
T_J	Junction Temperature	-55	125	°C
T_S	Storage Temperature	-55	150	
T_L	Lead Temperature (Soldering, 10 seconds)	—	300	
	Weight	1.3 (typical)		g

5/31/2001

找PDF 维库一下 pdf.dzsc.com

Recommended Operating Conditions

The Input/Output logic timing diagram is shown in Figure 1. The V_S and V_{SS} offset ratings are tested with all supplies biased at 15V differential.

Symbol	Parameter	Min.	Max.	Units
V_B	High Side Floating Supply Absolute Voltage	V_S + 10	V_S + 20	V
V_S	High Side Floating Supply Offset Voltage	-4	400	
V_{HO}	High Side Floating Output Voltage	V_S	V_B	
V_{CC}	Low Side Fixed Supply Voltage	10	20	
V_{LO}	Low Side Output Voltage	0	V_{CC}	
V_{DD}	Logic Supply Voltage	V_{SS} + 5	V_{SS} + 20	
V_{SS}	Logic Supply Offset Voltage	-5	5	
V_{IN}	Logic Input Voltage (HIN, LIN & SD)	V_{SS}	V_{DD}	

Dynamic Electrical Characteristics

V_{BIAS} (V_{CC}, V_{BS}, V_{DD}) = 15V, and V_{SS} = COM unless otherwise specified. The dynamic electrical characteristics are measured using the test circuit shown in Figure 3.

		Tj = 25°C			Tj = -55 to 125°C			
Symbol	Parameter	Min.	Typ.	Max.	Min.	Max.	Units	Test Conditions
t_{on}	Turn-On Propagation Delay	—	120	150	—	260	ns	V_S = 0V
t_{off}	Turn-Off Propagation Delay	—	100	125	—	220		V_S = 400V
t_{sd}	Shutdown Propagation Delay	—	110	140	—	235		V_S = 400V
t_r	Turn-On Rise Time	—	25	35	—	50		C_L = 1000pf
t_f	Turn-Off Fall Time	—	17	25	—	40		C_L = 1000pf
MT	Delay Matching, HS & LS Turn-On/Off	—	5	20	—	—		$\lvert Ht_{on}-Lt_{on}\rvert$ or $\lvert Ht_{off}-Lt_{off}\rvert$

Typical Connection

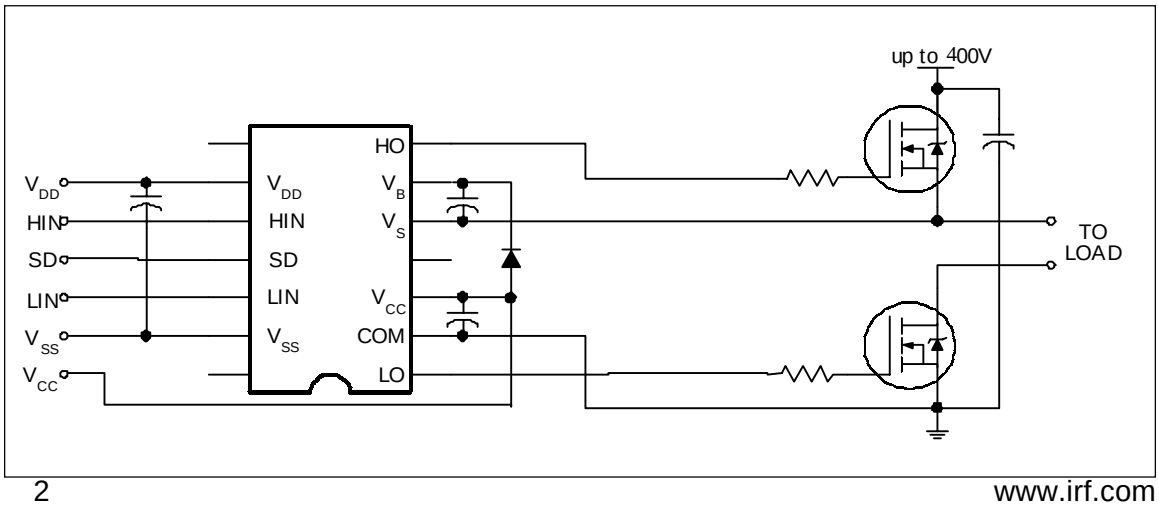

Static Electrical Characteristics

V_{BIAS} (V_{CC}, V_{BS}, V_{DD}) = 15V, unless otherwise specified. The V_{IN}, V_{TH} and I_{IN} parameters are referenced to V_{SS} and are applicable to all three logic input pins: HIN, LIN and SD. The V_O and I_O parameters are referenced to COM or V_S and are applicable to the respective output pins: HO or LO.

		Tj = 25°C		Tj = -55 to 125°C			
Symbol	Parameter	Min.	Max.	Min.	Max.	Units	Test Conditions
V_{IH}	Logic "1" Input Voltage	3.1	—	3.3	—	V	V_{DD} = 5V
		6.4	—	6.8	—		V_{DD} = 10V
		9.5	—	10	—		V_{DD} = 15V
		12.5	—	13.3	—		V_{DD} = 20V
V_{IL}	Logic "0" Input Voltage	—	1.8	—	1.7	V	V_{DD} = 5V
		—	3.8	—	3.6		V_{DD} = 10V
		—	6.0	—	5.7		V_{DD} = 15V
		—	8.3	—	7.9		V_{DD} = 20V
V_{OH}	High Level Output Voltage, V_{BIAS} - V_O	—	1.2	—	1.5		V_{IN} =V_{IH}, I_O = 0A
V_{OL}	Low Level Output Voltage, V_O	—	0.1	—	0.1		V_{IN} =V_{IH}, I_O = 0A
I_{LK}	Offset Supply Leakage Current	—	50	—	250	µA	V_B = V_S = 400V
I_{QBS}	Quiescent V_{BS} Supply Current	—	230	—	500		V_{IN} =0V or V_{DD}
I_{QCC}	Quiescent V_{CC} Supply Current	—	340	—	600		V_{IN} =0V, or V_{DD}
I_{QDD}	Quiescent V_{DD} Supply Current	—	30	—	60		V_{IN} =0V, or V_{DD}
I_{IN+}	Logic "1" Input Bias Current	—	40	—	70		V_{IN} = V_{DD}
I_{IN-}	Logic "0" Input Bias Current	—	1.0	—	10		V_{IN} = 0V
V_{BSUV+}	V_{BS} Supply Undervoltage Positive Going Threshold	7.5	9.7	—	—	V	
V_{BSUV-}	V_{BS} Supply Undervoltage Negative Going Threshold	7.0	9.4	—	—		
V_{CCUV+}	V_{CC} Supply Undervoltage Positive Going Threshold	7.4	9.6	—	—		
V_{CCUV-}	V_{CC} Supply Undervoltage Negative Going Threshold	7.0	9.4	—	—		
I_{O+}	Output High Short Circuit Pulsed Current	2.0	—	—	—	A	V_O = 0V, V_{IN} = V_{DD} PW ≤ 10 µs
I_{O-}	Output Low Short Circuit Pulsed Current	2.0	—	—	—		V_O = 15V, V_{IN} = 0V PW ≤ 10 µs

Radiation Performance

International Rectifier Radiation Hardened gate drivers are tested to verify their hardness capability. The hardness assurance program at International rectifier uses a Cobalt-60 (^{60}Co) source and heavy ion irradiation.

Every wafer shall be tested per MIL-STD-883, Method 1019, test condition A “Ionizing Radiation (Total Dose) Test Procedure”.

Both pre- and post- irradiation performances are tested and specified using the same drive circuitry and test conditions to provide a direct comparison.

For Static Irradiation Test Conditions refer to figure 7.

Static Electrical Characteristics

Symbol	Parameter	Tj = 25°C 100K Rads (Si) Min	Max	Units	Test Conditions
V_{IH}	Logic “1” Input Voltage	3.1	—	V	VDD = 5V
		6.4	—		VDD = 10V
		9.5	—		VDD = 15V
		12.5	—		VDD = 20V
V_{IL}	Logic “0” Input Voltage	—	1.8	V	VDD = 5V
		—	3.8		VDD = 10V
			6.0		VDD = 15V
		—	8.3		VDD = 20V
V_{OH}	High Level Output Voltage, V_{BIAS} - V_O	—	1.2		V_{IN} =V_{IH}, I_O = 0A
V_{OL}	Low Level Output Voltage, V_O	—	0.1		V_{IN} =V_{IH}, I_O = 0A
I_{LK}	Offset Supply Leakage Current	—	50	µA	VB =VS = 400A
I_{QBS}	Quiescent V_{BS} Supply Current	—	230		VIN =0V or VDD
I_{QCC}	Quiescent V_{CC} Supply Current	—	340		VIN =0V or VDD
I_{QDD}	Quiescent V_{DD} Supply Current	—	30		VIN =0V or VDD
I_{IN+}	Logic “1” Input Bias Current	—	40		VIN =VDD
I_{IN-}	Logic “0” Input Bias Current	—	1.0		VIN =0V
V_{BSUV+}	V_{BS} Supply Undervoltage Positive Going Threshold	7.5	9.7	V	
V_{BSUV-}	V_{BS} Supply Undervoltage Negative Going Threshold	7.0	9.4		
V_{CCUV+}	V_{CC} Supply Undervoltage Positive Going Threshold	7.4	9.9		
V_{CCUV-}	V_{CC} Supply Undervoltage Negative Going Threshold	7.0	9.6		
I_{O+}	Output High Short Circuit Pulsed Current	2.0	—	A	VO =0V, VIN =VDD PW ≤ 10 µs
I_{O-}	Output Low Short Circuit Pulsed Current	2.0	—		VO =15V, VIN =0V PW ≤ 10 µs

International Rectifier radiation hardened Gate Drivers have been characterized in heavy ion environment for Single Event Effects (SEE). Single Event Effects characterization data is illustrated below. For Static Bias Test Conditions refer to figure 8.

Single Event Effect Safe Operating Area

Ion	LET MeV/(mg/cm^2))	Energy (MeV)	Angle (degrees)	V_S (V) @V_{BS}=-10V	@V_{BS}=-15V	@V_{BS}=-17.5V
Br	37	284	0	400	400	400
I	60	344	0	325	250	200
Au	82	346	0	250	200	175
I	85	344	45	400	400	350
Au	100	346	35	400	400	350

Note: VCC/VDD = 20V, except for LET=100, then VCC/VDD = 17.5V

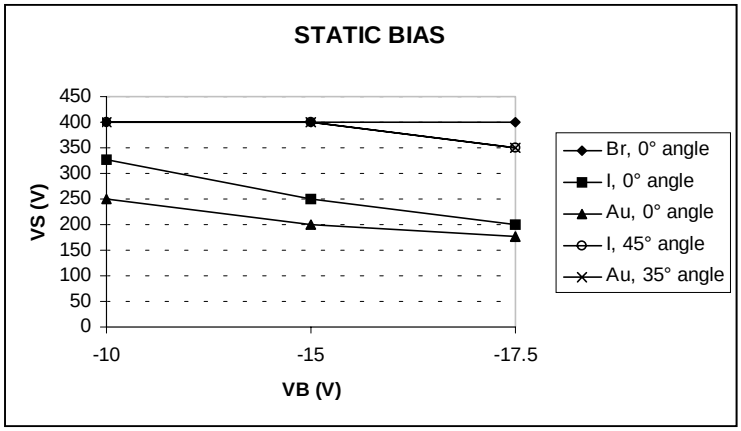

Single Event Effect, Safe Operating Area

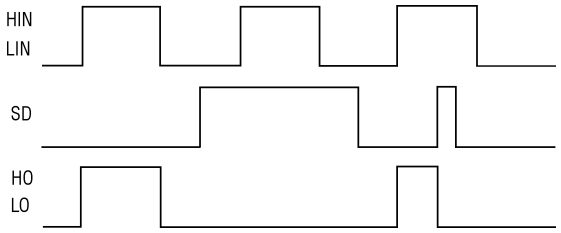

Figure 1. Input/Output Logic Timing Diagram

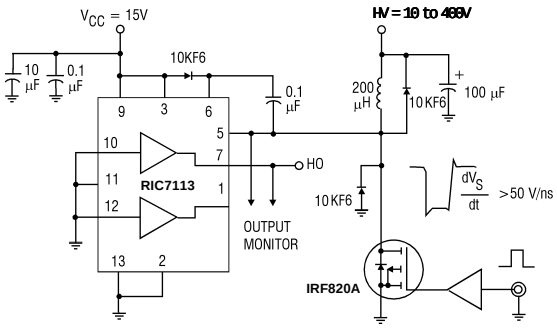

Figure 2. Floating Supply Voltage Transient Test Circuit

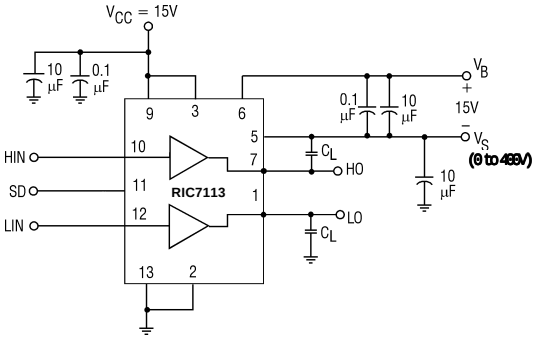

Figure 3. Switching Time Test Circuit

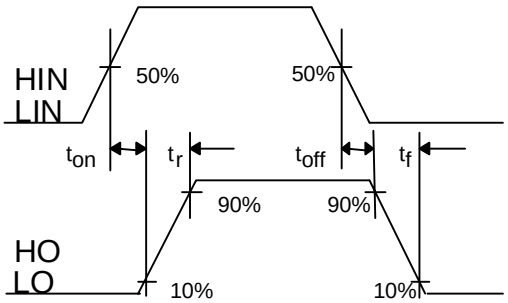

Figure 4. Switching Time Waveform Definition

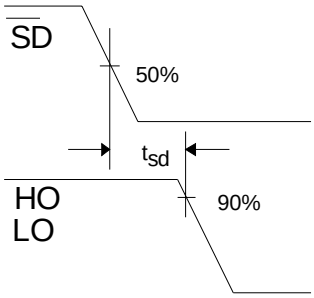

Figure 5. Shutdown Waveform Definitions

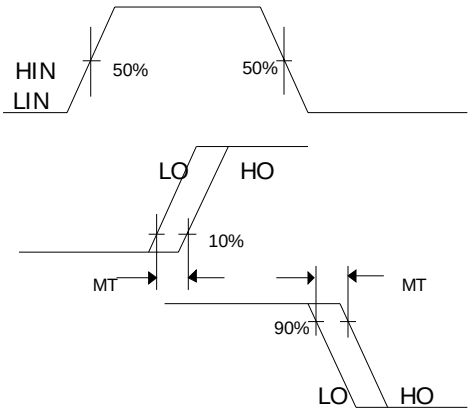

Figure 6. Delay Matching Waveform Definitions

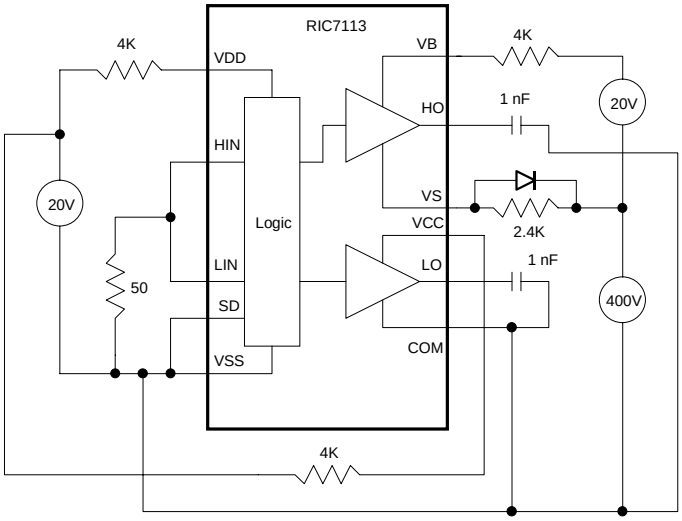

Figure 7. Static Bias Conditions for Total Ionizing Dose Test

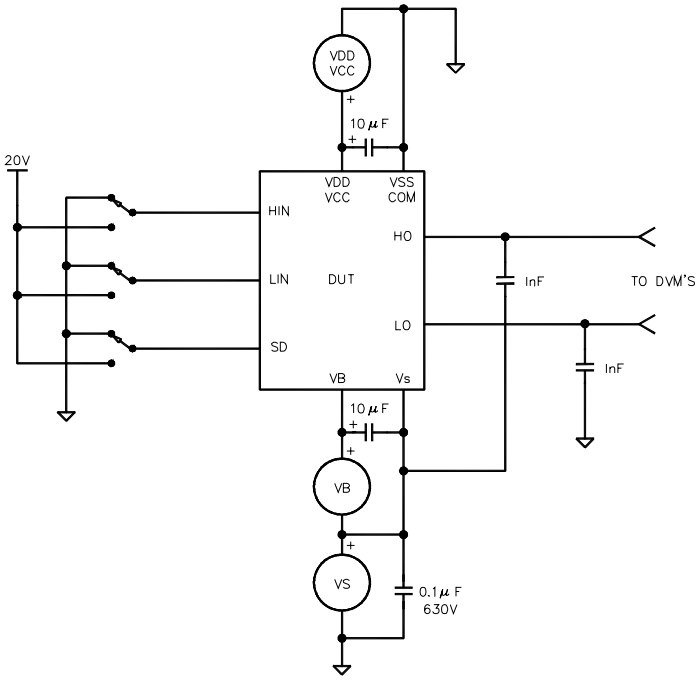

Figure 8. Static Bias Conditions for Single Event Effect Test

Functional Block Diagram

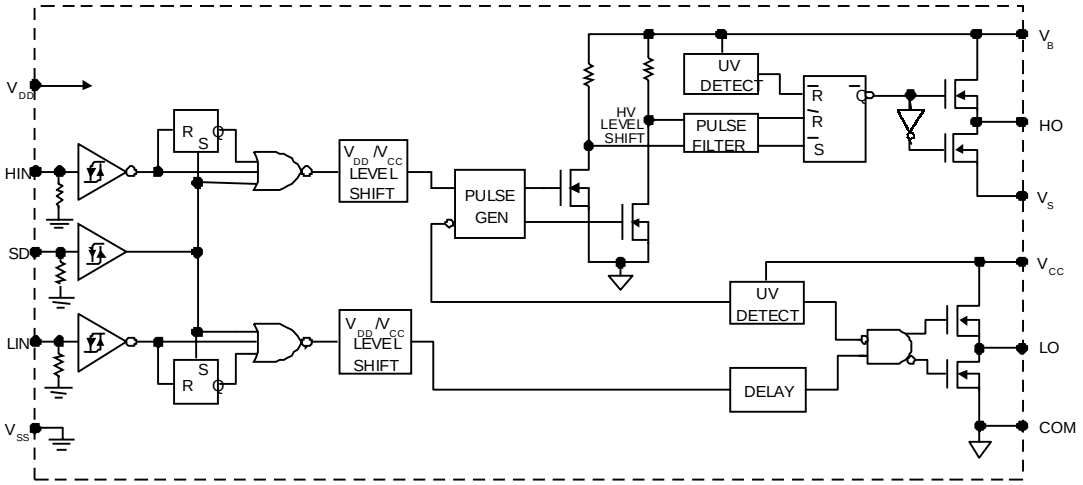

Lead Definitions

Symbol	Description
V_{DD}	Logic supply
HIN	Logic input for high side gate driver output (HO), in phase
SD	Logic input for shutdown
LIN	Logic input for low side gate driver output (LO), in phase
V_{SS}	Logic ground
V_B	High side floating supply
HO	High side gate drive output
V_S	High side floating supply return
V_{CC}	Low side supply
LO	Low side gate drive output
COM	Low side return

Case Outline and Dimensions — MO-036AB package

RIC7113L4

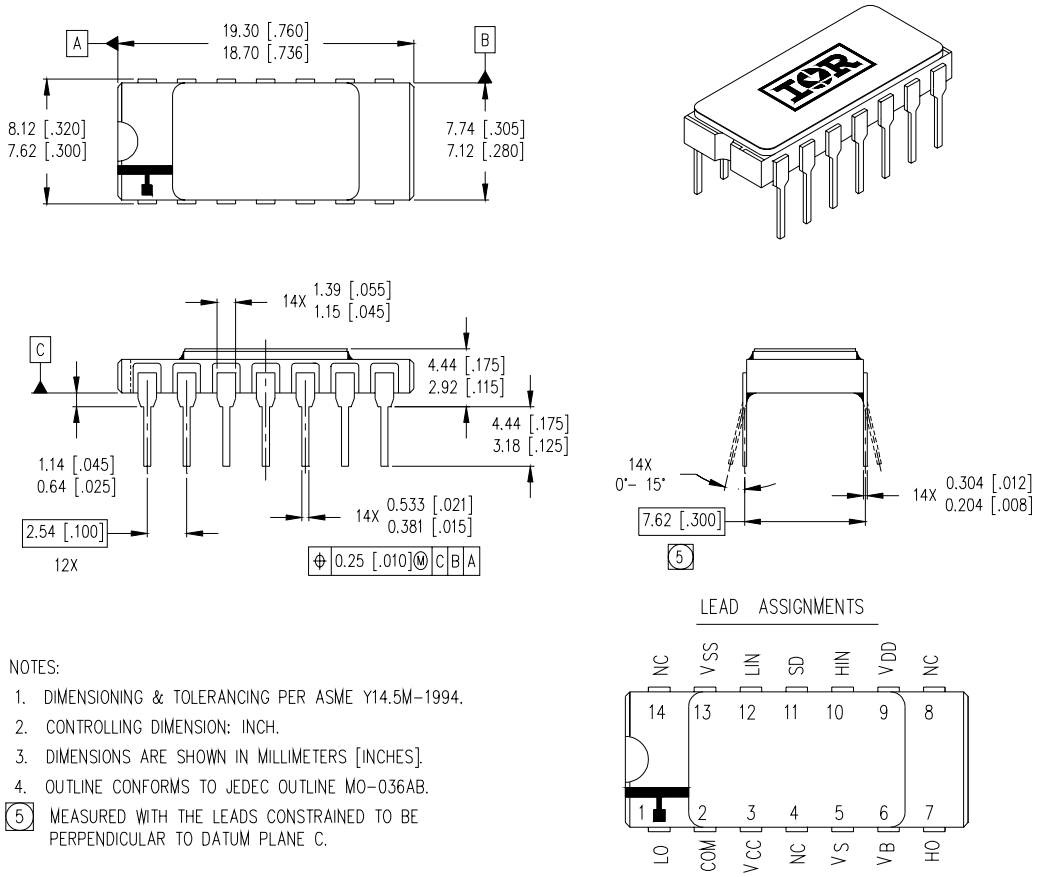

NOTES:

1. DIMENSIONING & TOLERANCING PER ASME Y14.5M–1994.
2. CONTROLLING DIMENSION: INCH.
3. DIMENSIONS ARE SHOWN IN MILLIMETERS [INCHES].
4. OUTLINE CONFORMS TO JEDEC OUTLINE MO–036AB.
5. MEASURED WITH THE LEADS CONSTRAINED TO BE PERPENDICULAR TO DATUM PLANE C.

International
IOR Rectifier

IR WORLD HEADQUARTERS: 233 Kansas St., El Segundo, California 90245, USA Tel: (310) 252-7105
TAC Fax: (310) 252-7903
Visit us at www.irf.com for sales contact information.

Data and specifications subject to change without notice. 05/01