查询LB1980H供应商 捷多邦，专业PCB打样工厂，24小时加急出货

Ordering number : EN5974

Monolithic Digital IC

LB1980H

Three-Phase Brushless Motor Driver for VCR Capstan Motors

Overview

The LB1980H is a 3-phase brushless motor driver that is particularly appropriate for VCR capstan motor drivers.

Functions

- 3-phase full-wave drive
- Built-in torque ripple correction circuit (variable correction ratio)
- Current limiter circuit
- Upper and lower side output stage over-saturation prevention circuit that does not require external capacitors.
- FG amplifier
- Thermal shutdown circuit

Package Dimensions

unit: mm

3233-HSOP28H

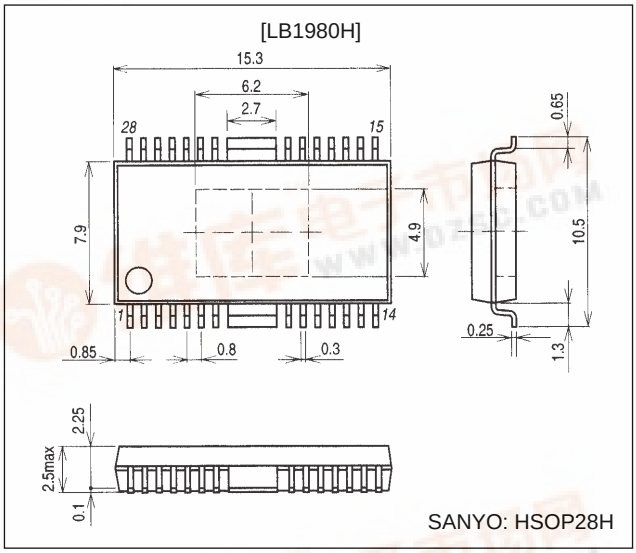

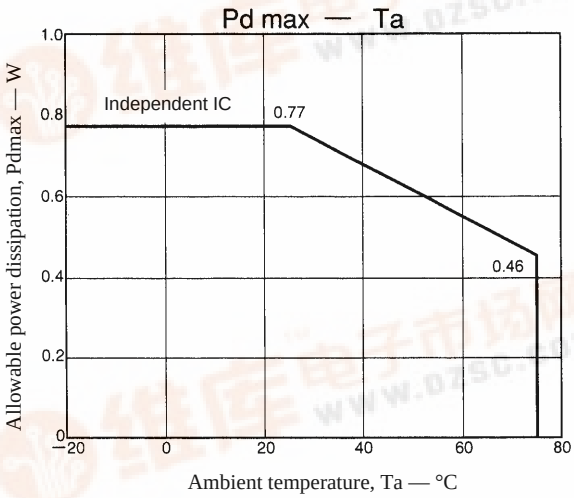

■ Any and all SANYO products described or contained herein do not have specifications that can handle applications that require extremely high levels of reliability, such as life-support systems, aircraft's control systems, or other applications whose failure can be reasonably expected to result in serious physical and/or material damage. Consult with your SANYO representative nearest you before using any SANYO products described or contained herein in such applications.

■ SANYO assumes no responsibility for equipment failures that result from using products at values that exceed, even momentarily, rated values (such as maximum ratings, operating condition ranges, or other parameters) listed in products specifications of any and all SANYO products described or contained herein.

SANYO Electric Co.,Ltd. Semiconductor Bussiness Headquarters
TOKYO OFFICE Tokyo Bldg., 1-10, 1 Chome, Ueno, Taito-ku, TOKYO, 110-8534 JAPAN

找PDF 维库一下 pdf.dzsc.com

Specifications

Absolute Maximum Ratings at Ta = 25°C

Parameter	Symbol	Conditions	Ratings	Unit
Maximum supply voltage	V_{CC} max		7	V
	V_S max		24	V
Maximum output current	I_O max		1.3	A
Allowable power dissipation	Pd max	Mounted on a 71.6 × 114.3 × 1.6 mm glass Epoxy printed circuit board	1.81	W
		Independent device	0.77	W
Operating temperature	Topr		–20 to + 75	°C
Storage temperature	Tstg		–55 to + 150	°C

Allowable Operating Ranges at Ta = 25°C

Parameter	Symbol	Conditions	Ratings	Unit
Supply voltage	V_S		5 to 22	V
	V_{CC}		4.5 to 5.5	V
Hall input amplitude	V_{HALL}	Between the Hall inputs	±30 to ±80	mVo-p
GSENSE pin input range	V_{GSENSE}	With respect to the control system ground	–0.20 to + 0.20	V

Electrical Characteristics at Ta = 25°C, V_{CC} = 5 V, V_S = 15 V

Parameter	Symbol	Conditions	Ratings			Unit
			min	typ	max	
V_{CC} supply current	I_{CC}	RL = ∞, V_{CTL} = 0 V, V_{LIM} = 0 V (Quiescent)		12	18	mA
[Outputs]						
Output saturation voltage	$V_O$sat1	I_O = 500 mA, Rf = 0.5 Ω, Sink + Source V_{CTL} = V_{LIM} = 5 V (With saturation prevention)		2.1	2.6	V
	$V_O$sat2	I_O = 1.0 A, Rf = 0.5 Ω, Sink + Source V_{CTL} = V_{LIM} = 5 V (With saturation prevention)		2.6	3.5	V
Output leakage current	$I_O$leak				1.0	mA
[FR]						
FR pin input threshold voltage	V_{FSR}		2.25	2.50	2.75	V
FR pin input bias current	I_B (FSR)		–5.0			µA
[Control]						
CTLREF pin voltage	V_{CREF}		2.05	2.15	2.25	V
CTLREF pin input range	V_{CREFIN}		1.50		3.50	V
CTL pin input bias current	I_B (CTL)	With V_{CTL} = 5 V and the CTLREF pin open			4.0	µA
CTL pin control start voltage	V_{CTL} (ST)	With Rf = 0.5 Ω, V_{LIM} = 5 V, I_O ≥ 10 mA, Hall input logic fixed (U, V, W = H, H, L)	2.00	2.15	2.30	V
CTL pin control Gm	Gm (CTL)	With Rf = 0.5 Ω, ΔI_O = 200 mA, Hall input logic fixed (U, V, W = H, H, L)	0.46	0.58	0.70	A/V
[Current Limiter]						
LIM current limit offset voltage	Voff (LIM)	With Rf = 0.5 Ω, V_{CTL} = 5 V, I_O ≥ 10 mA, Hall input logic fixed (U, V, W = H, H, L)	140	200	260	mV
LIM pin input bias current	I_B (LIM)	With V_{CTL} = 5 V and the V_{CREF} pin open	–2.5			µA
LIM pin current control level	I_{LIM}	With Rf = 0.5 Ω, V_{CTL} = 5 V, V_{LIM} = 2.06 V, Hall input logic fixed (U, V, W = H, H, L)	830	900	970	mA
[Hall Amplifier]						
Hall amplifier input offset voltage	Voff (HALL)		–6		+6	mV
Hall amplifier input bias current	I_B (HALL)			1.0	3.0	µA
Hall amplifier common-mode input voltage range	V_{CM} (HALL)		1.3		3.3	V
[TRC]						
Torque ripple correction ratio	TRC	For the high and low peaks in the Rf waveform when I_O = 200 mA. (Rf = 0.5 Ω, with the ADJ pin open)*1		9		%
ADJ pin voltage	V_{ADJ}		2.37	2.50	2.63	V
[FG Amplifier]						
FG amplifier input offset voltage	Voff (FG)		–8		+8	mV
FG amplifier input bias current	I_B (FG)		–100			nA
FG amplifier output saturation voltage	$V_O$sat (FG)	Sink side, for the load provided by the internal pull-up resistor			0.5	V
FG amplifier voltage gain	V_G (FG)	For the open loop state with f = 10 kHz	41.5	44.5	47.5	dB
FG amplifier common-mode input voltage	V_{GM} (FG)		0.5		4.0	V

Notes : 1. The torque ripple correction ratio is determined as follows from the Rf voltage waveform.
2. Parameters that are indicated as design target values in the conditions column are not tested.

Continued on next page.

Continued from preceding page.

Parameter	Symbol	Conditions	Ratings			Unit
			min	typ	max	
[Saturation]						
Saturation prevention circuit lower side voltage setting	$V_O$sat (DET)	The voltages between each OUT and Rf pair when I_O = 10 mA, Rf = 0.5 Ω, and V_{CTL} = V_{LIM} = 5 V	0.175	0.25	0.325	V
[TSD]						
TSD operating temperature	TSD	Design target value*2		180		°C
Hysteresis width	ΔTSD	Design target value*2		20		°C

Notes : 1. The torque ripple correction ratio is determined as follows from the Rf voltage waveform.
2. Parameters that are indicated as design target values in the conditions column are not tested.

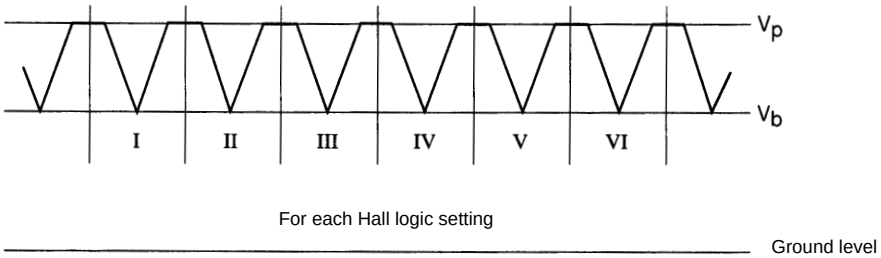

$$\text{Correction ratio} = \frac{2 \times (V_p - V_b)}{V_p - V_b} 100 \times (\%)$$

Truth Table and Control Functions

	Source → Sink	Hall input			FR
		U	V	W	
1	Phase V → Phase W	H	H	L	H
	Phase W → Phase V				L
2	Phase U → Phase W	H	L	L	H
	Phase W → Phase U				L
3	Phase U → Phase V	H	L	H	H
	Phase V → Phase U				L
4	Phase W → Phase V	L	L	H	H
	Phase V → Phase W				L
5	Phase W → Phase U	L	H	H	H
	Phase U → Phase W				L
6	Phase V → Phase U	L	H	L	H
	Phase U → Phase V				L

Note: Since the drive technique adopted is a 180° technique, phases other than the sink and source phase do not turn off.

Note: In the FR column, “H” refers to a voltage of 2.75 V or higher, and “L” refers to 2.25 V or lower (when V_{CC} = 5 V.)

Note: In the Hall input column, “H” refers to the state in the corresponding phase where the + input is at a potential at least 0.01 V higher than the – input, and “L” refers to the state where the – input is at a potential at least 0.01 V higher than the + input.

Control Function and Current Limiter Function

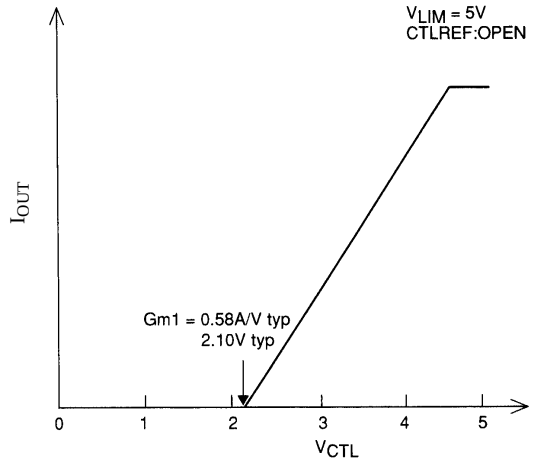

Control Characteristics

A11125

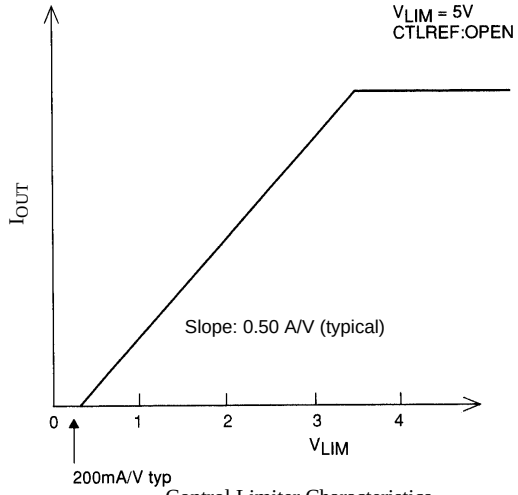

Control Limiter Characteristics

A11126

Pin Descriptions

Pin No.	Pin	Function	Equivalent circuit
27 28 1	U_{OUT} V_{OUT} W_{OUT}	U phase output V phase output W phase output (Spark killer diodes are built-in.)	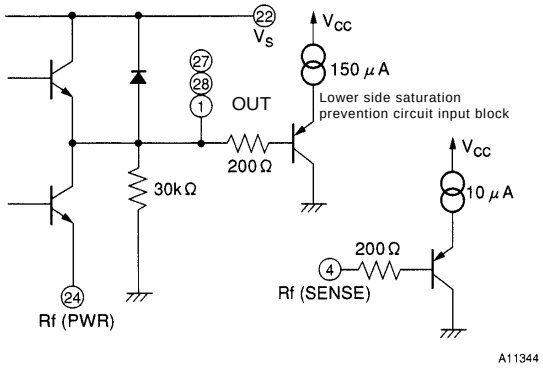
4 24	Rf (SENSE) Rf (PWR)	Output current detection. The control block current limiter operates using the resistor Rf connected between these pins and ground. Also, the lower side saturation prevention circuit and the torque ripple correction circuit operate based on the voltages across this resistor. It is especially important to note that, since the saturation prevention level is set using this voltage, the lower side saturation prevention circuit will become less effective in the high current region if the value of Rf is lowered excessively. Also, the PWR and SENSE pins must be connected together.	
22	V_S	Output block power supply	
5	GSENSE	Ground sensing. The influence of the common ground impedance on Rf can be excluded by connecting this pin to nearest ground for the Rf resistor side of the motor ground wiring that includes Rf. (This pin must not be left open.)	
6	FR	Forward/reverse selection. The voltage applied to this pin selects the motor direction (forward or reverse). (Vth = 2.5 V at V_{CC} = 5 V (typical))	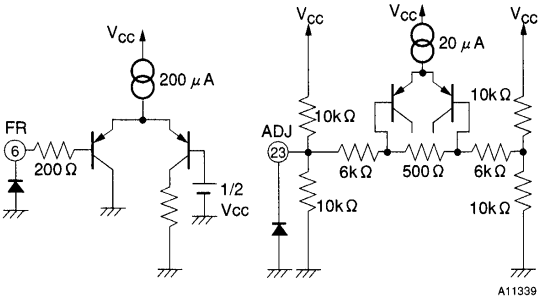
23	ADJ	Used for external adjustment of the torque ripple correction ratio. Apply a voltage externally with a low-impedance circuit to the ADJ pin to adjust the correction ratio. The correction ratio falls as the applied voltage is increased, and increases as the applied voltage decreases. The torque ripple correction ratio can be modified by factors in the range 0 to 2 times the ratio that applies when his pin is left open. (The pin voltage is set to about $V_{CC}/2$ internally, and the input impedance is about 5 kΩ.)	
7	GND	Ground for all circuits other than the output transistors. The lowest potential of the output transistors is that of the Rf pin.	
8	FG_{IN}^{+}	Input used when the FG amplifier is used as an inverting input. A feedback resistor must be connected between FG_{OUT} and this pin.	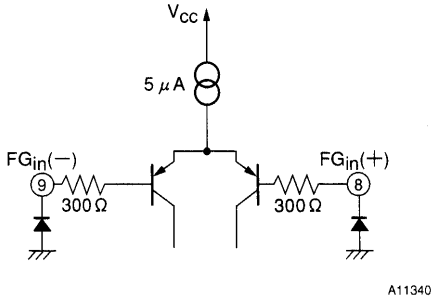
9	FG_{IN}^{-}	Noninverting input used when the FG amplifier is used as a differential input amplifier. No bias is applied internally.	
10	FG_{OUT}	FG amplifier output. There is an internal resistive load.	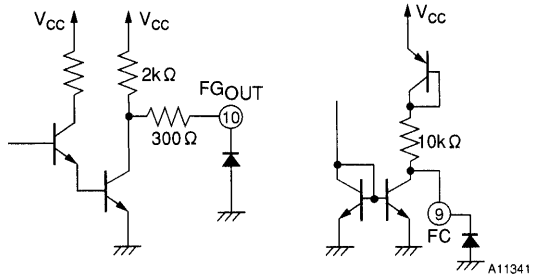
14	FC	Speed control loop frequency characteristics correction.	

Continued on next page.

Continued from preceeding page.

Pin No.	Pin	Function	Equivalent circuit
11	CTL	Speed control input. The control implemented is fixed current drive controlled by current feedback from Rf. Gm = 0.58/V (typical) when Rf = 0.5 Ω	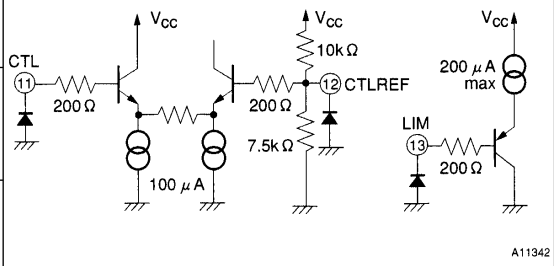
12	CTLREF	Control reference voltage. While this pin is set to about 0.43 × V_{CC} internally, this voltage can be modified by applying a voltage from a low-impedance circuit. (The input impedance is about 4.3 kΩ).	
13	LIM	Current limiter function control. The output current can be varied linearly by applying a voltage to this pin. The slope is 0.5 A/V (typical) when Rf = 0.5 Ω.	
15 16 17 18 19 20	U_{IN}^+ U_{IN}^- V_{IN}^+ V_{IN}^- W_{IN}^+ W_{IN}^-	U phase Hall element inputs. Logic high is defined as states where $IN^+ > IN^-$. V phase Hall element inputs. Logic high is defined as states where $IN^+ > IN^-$. W phase Hall element inputs. Logic high is defined as states where $IN^+ > IN^-$.	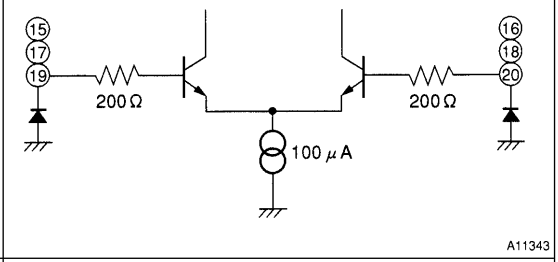
21	V_{CC}	Power supply for all internal blocks other than the output block. This voltage must be stabilized so that noise and ripple do not enter the IC.	

Pin Assignment

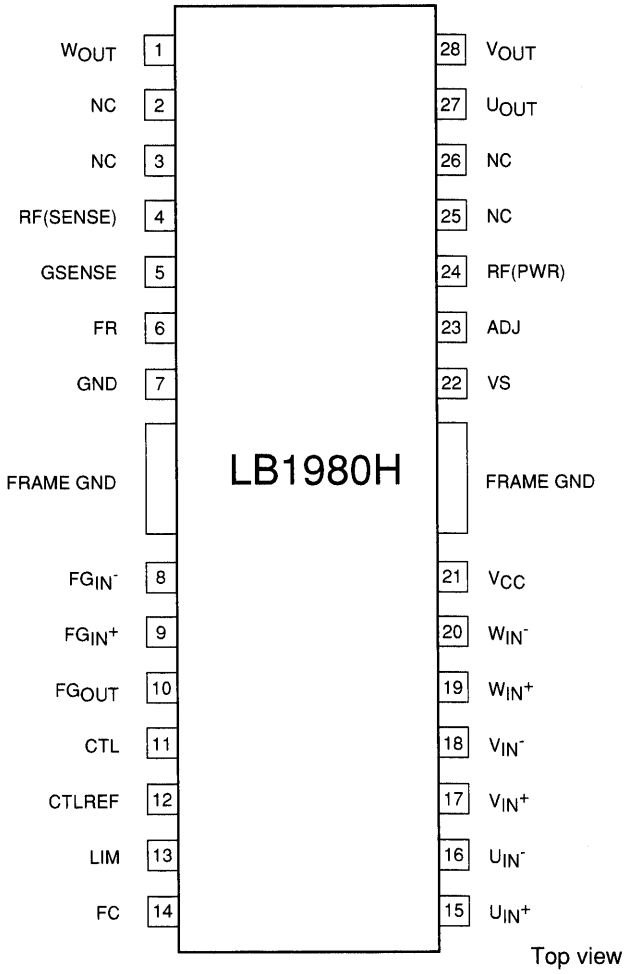

A11127

Block Diagram

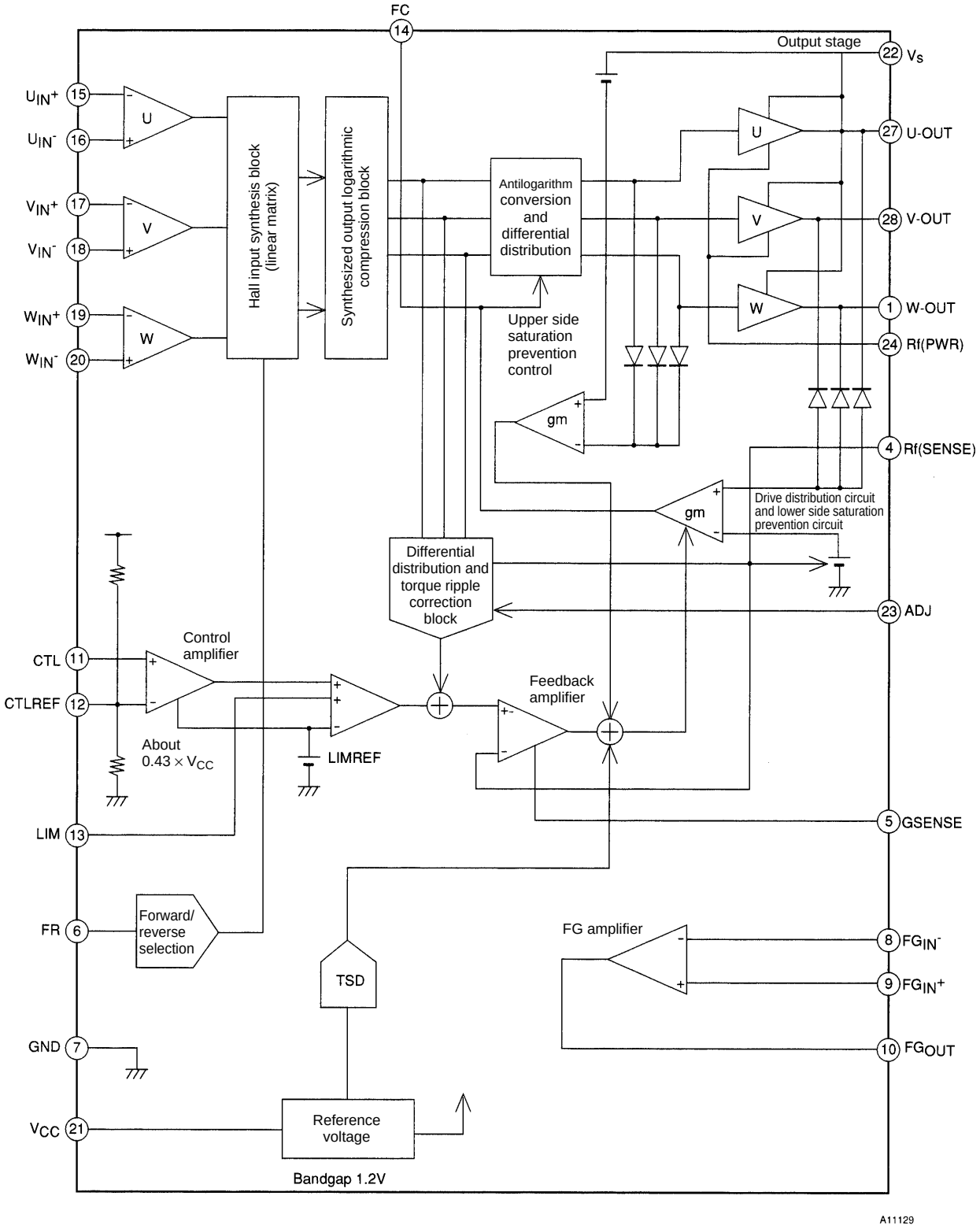

Sample Application Circuit

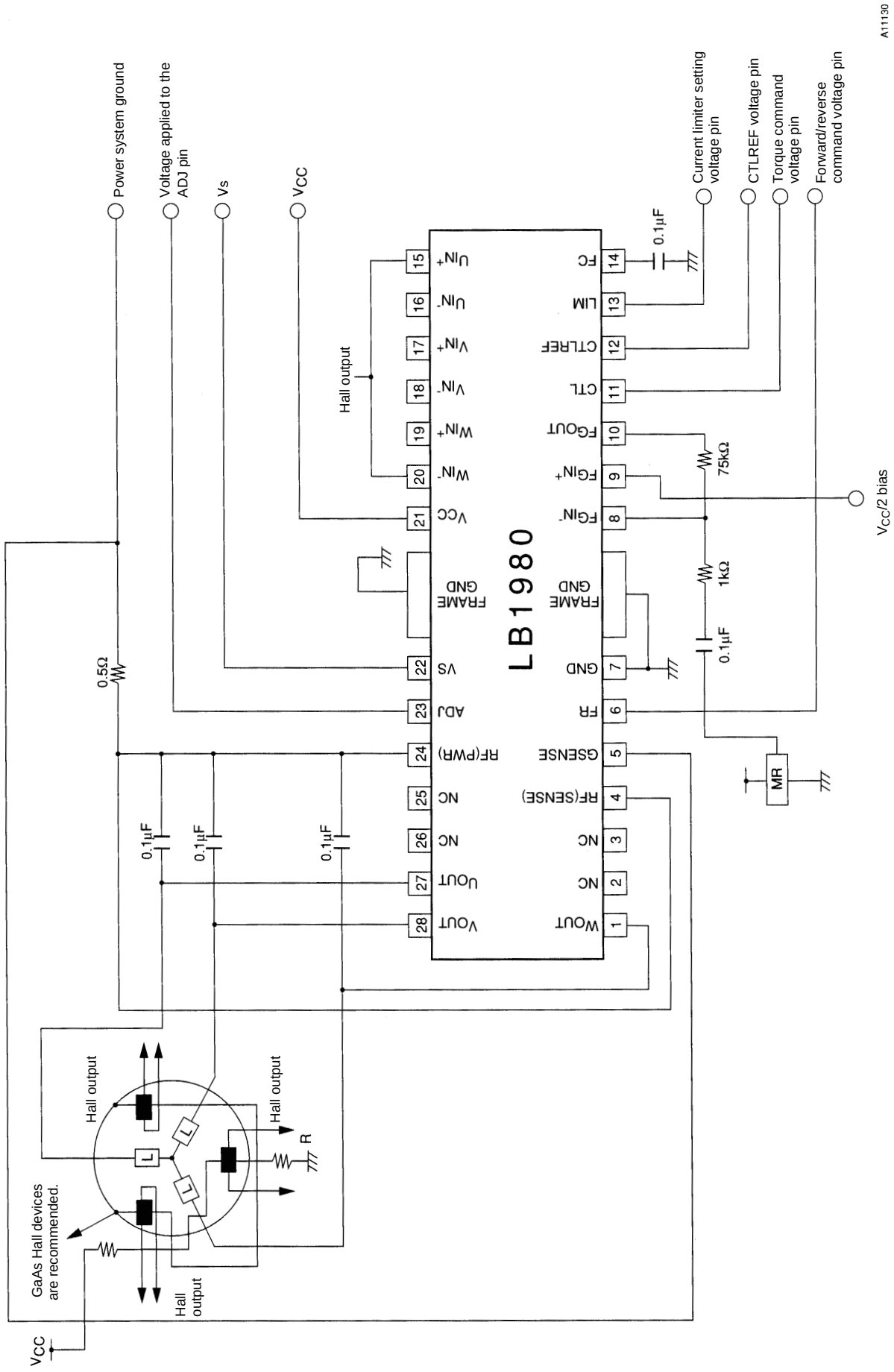

■ Specifications of any and all SANYO products described or contained herein stipulate the performance, characteristics, and functions of the described products in the independent state, and are not guarantees of the performance, characteristics, and functions of the described products as mounted in the customer's products or equipment. To verify symptoms and states that cannot be evaluated in an independent device, the customer should always evaluate and test devices mounted in the customer's products or equipment.

■ SANYO Electric Co., Ltd. strives to supply high-quality high-reliability products. However, any and all semiconductor products fail with some probability. It is possible that these probabilistic failures could give rise to accidents or events that could endanger human lives, that could give rise to smoke or fire, or that could cause damage to other property. When designing equipment, adopt safety measures so that these kinds of accidents or events cannot occur. Such measures include but are not limited to protective circuits and error prevention circuits for safe design, redundant design, and structural design.

■ In the event that any or all SANYO products (including technical data, services) described or contained herein are controlled under any of applicable local export control laws and regulations, such products must not be exported without obtaining the export license from the authorities concerned in accordance with the above law.

■ No part of this publication may be reproduced or transmitted in any form or by any means, electronic or mechanical, including photocopying and recording, or any information storage or retrieval system, or otherwise, without the prior written permission of SANYO Electric Co., Ltd.

■ Any and all information described or contained herein are subject to change without notice due to product/technology improvement, etc. When designing equipment, refer to the "Delivery Specification" for the SANYO product that you intend to use.

■ Information (including circuit diagrams and circuit parameters) herein is for example only; it is not guaranteed for volume production. SANYO believes information herein is accurate and reliable, but no guarantees are made or implied regarding its use or any infringements of intellectual property rights or other rights of third parties.

This catalog provides information as of October, 1998. Specifications and information herein are subject to change without notice.