查询MAX2354供应商 捷多邦，专业PCB打样工厂，24小时加急出货

19-2183; Rev 0; 10/01

MAX2366 Evaluation Kit

Evaluates: MAX2366/MAX2367/MAX2368

General Description

The MAX2366 evaluation kit (EV kit) simplifies testing of the MAX2366/MAX2367/MAX2368. The EV kit provides 50Ω SMA connectors for all RF inputs and outputs. A varactor-based tank circuit is provided for the on-chip voltage-controlled oscillator (VCO) and phase locked with an on-chip PLL. I/Q baseband inputs come with standard BNC connectors.

The EV kit allows evaluation of the MAX2366/MAX2367/MAX2368s' I/Q modulator, IF VGA, RF upconverter, dual-band IF VCOs, dual synthesizer, 3-wire programming interface, and power-management features.

Features

- ♦ On-Board PCS and Cellular VCOs
- ♦ 50Ω SMA Connectors on All RF Ports
- ♦ BNC Connectors for Baseband Inputs
- ♦ Low-Power Shutdown Mode
- ♦ PC Control Software Available at www.maxim-ic.com
- ♦ SPI™/QSPI™/MICROWIRE™ Compatible

Ordering Information

PART	TEMP. RANGE	IC PACKAGE
MAX2366EVKIT	-40°C to +85°C	48 QFN-EP*

*Exposed pad

MAX2366 Component List

DESIGNATION	QTY	DESCRIPTION
C1	1	3pF ±0.25pF ceramic capacitor (0402) Murata GRM36COG030C050
C2, C16, C20, C39, C40, C60, C64, C65, C67, C68, C80	11	100pF ±5% ceramic capacitors (0402) Murata GRM36COG101J050 or Taiyo Yuden UMK105CH101JW
C3, C22, C23, C41	4	33pF ±5% ceramic capacitors (0402) Murata GRM36COG330J050 or Taiyo Yuden UMK105CH330JW
C4, C5, C38, C42, C58, C75, C79, C88, C91, C93, C95, C96, C97	13	0.1µF ceramic capacitors (0402) Murata GRM36Y5V104Z016 or Taiyo Yuden LMK105BJ104KV
C6	1	4.7pF ±0.1pF ceramic capacitor (0402) Murata GRM36COG4R7B050 or Taiyo Yuden EVK105CH4R7JW
C7, C10, C18, C19, C21, C30, C31, C35, C63, C76, C78, C81	12	1000pF ±10% ceramic capacitors (0402) Murata GRM36X7R102K050 or Taiyo Yuden UMK105B102KW
C8, C9, C11, C15, C17, C34, C55, C57	8	0.01µF ceramic capacitors (0402) Murata GRM36Y5V103Z050 or Taiyo Yuden EMK105BJ103KV
C12	1	1.2pF ±0.1pF ceramic capacitor (0402) Murata GRM36COG1R2B050 or Taiyo Yuden EVK105CH1R2JW
C13, C14, C26, C27, C48, C56, C66, C84, C85	0	Not installed (0402)
C24, C25	2	9pF ±5% ceramic capacitors (0402) Murata GRM36COG090J050 or Taiyo Yuden UMK105CH090JW
C28	1	0.033µF ±10% ceramic capacitor (0402) Murata GRM36X7R333K010 or Taiyo Yuden LMK105BJ333KV
C29	1	0.022µF ±10% ceramic capacitor (0402) Murata GRM36X7R223K016 or Taiyo Yuden EMK105BJ223KV
C32	1	1µF ±10% ceramic capacitor (0805) Murata GRM40X7R105K010A or Taiyo Yuden LMK212BJ105KG

SPI and QSPI are trademarks of Motorola, Inc.
MICROWIRE is a trademark of National Semiconductor Corp.

For pricing, delivery, and ordering information, please contact Maxim/Dallas Direct! at 1-888-629-4642, or visit Maxim's website at www.maxim-ic.com

MAX2366 Component List (continued)

DESIGNATION	QTY	DESCRIPTION
C36	1	3300pF ±10% ceramic capacitor (0402) Murata GRM36X7R332K050 or Taiyo Yuden UMK105B332KW
C37	1	0.047µF ±10% ceramic capacitor (0402) Murata GRM36X7R473K010 or Taiyo Yuden LMK105BJ473KV
C44, C45, C46	3	15pF ±5% ceramic capacitors (0402) Murata GRM36COG150BJ50 or Taiyo Yuden UMK105CH150JW
C47, C50	2	9.1pF ±5% ceramic capacitors (0402) Murata GRM36COG9R1J050 or Taiyo Yuden EVK105CH9R1JW
C49	1	2.7pF ±0.1pF ceramic capacitor (0402) Murata GRM36COG2R7B050 or Taiyo Yuden EVK105CH2R7JW
C51	1	1.5pF ±0.1pF ceramic capacitor (0402) Murata GRM36COG1R5B050 or Taiyo Yuden EVK105CH1R5JW
C53, C54	2	10pF ±5% ceramic capacitors (0402) Murata GRM36COG100J050 or Taiyo Yuden UMK105CH100JW
C70, C71	2	22µF 10V tantalum capacitors AVX TAJB226K010
C72, C73, C82, C83, C94	5	1µF capacitors (0603) Murata GRM39Y5V105Z010
C74, C77, C86	3	10µF 10V tantalum capacitors AVX TAJB106M010
D1, D2, D4, D5	4	Varactor diodes Alpha Industries SMV1763-079

DESIGNATION	QTY	DESCRIPTION
FL1	1	130MHz bandpass filter Murata LFSH30N32M0130A
FL2	0	Not installed
J3, J7	2	BNC connectors
JP1	1	20-pin header receptacle
JU1–JU4, JU6–JU10	9	2-pin headers
L1	1	8.7nH ±5% inductor (0603) Coilcraft 0603CS-8N7XJBC
L2, L3	2	100nH ±5% inductors (0603) Coilcraft 0603CS-R10XJBC
L4	1	33nH ±5% inductor (0603) Coilcraft 0603CS-33NXJBC
L5, L19	2	220nH ±5% inductors (0603) Coilcraft 0603CS-R22XJBC
L6	1	3.9nH ±5% inductor (0402) Murata LQG10A3N9S00
L9	1	43nH ±5% inductor (0603) Coilcraft 0603CS-43NXJBC
L10	1	11nH ±5% inductor (0603) Coilcraft 0603CS-11NXJBC
L11	1	22nH ±5% inductor (0603) Coilcraft 0603CS-22NXJBC
L16	1	220nH ±5% (0805) inductor Coilcraft 0805CS -221XJBC
Q1, Q2	2	NPN transistors Central Semiconductor CMPT8099
R1, R2, R7, R19, R24, R47, R52	7	47kΩ ±5% resistors (0402)
R3	1	51kΩ ±5% resistor (0402)
R4, R5, R29, R30	4	1kΩ ±5% resistors (0402)
R6, R10, R12, R15, R17, R25, R26, R33, R34, R39, R46, R70, R73	0	Not installed (0402)

MAX2366 Component List (continued)

DESIGNATION	QTY	DESCRIPTION
R8, R16, R28, R48, R50, R51	6	511Ω ±1% resistors (0603)
R9, R18	2	39Ω 1% resistors (0603)
R11, R37	2	22Ω ±5% resistors (0402)
R13, R22	2	680Ω ±5% resistors (0603)
R14, R21, R41, R42	4	100Ω ±1% resistors (0402)
R23, R45	2	1kΩ ±1% resistors (0402)
R27	1	10kΩ ±5% resistor (0402)
R31, R32, R35, R36	4	5.1kΩ ±5% resistors (0402)
R38, R44, R49 R55, R58, R59, R60, R61, R62, R76	10	0Ω resistors (0402)
R40	1	12kΩ ±5% resistor (0402)
R43, R54, R56	3	470Ω ±5% resistors (0402)
R53, R57	2	150Ω ±5% resistors (0402)
R64	1	20kΩ ±5% resistor (0402)
R71	1	130kΩ ±5% resistor (0402)
R72	1	2.4kΩ ±5% resistor (0402)
R74	1	16kΩ ±5% resistor (0402)

DESIGNATION	QTY	DESCRIPTION
RFL, RFH0, RFH1, REF, TANKH BYP, IFLO, IFOUTL, IFINL, LOL, LOH	10	SMA connectors, PC edge-mount EF Johnson 142-0701-801
VBAT, VREG, +5V, GND (3)	6	2-pin headers
T2, T3	2	Baluns, Toko 458DB-1011
U1	1	MAX2366EGM
U2	1	+2.8V LDO MAX8867EUK28
U3, U4	2	Dual op amps MAX412ESA
U5, U8	2	+3.0V LDO MAX8867EUK30
V1	1	1750MHz VCO Murata MQE925-1750-T7
V2	1	967MHz VCO Murata MQK002-967
None	1	MAX2366/MAX2367/MAX2368 data sheet
None	1	INTF2300 board
None	1	Ribbon cable

MAX2366 Evaluation Kit

Component Suppliers

SUPPLIER	PHONE	FAX
Alpha Industries	617-935-5150	617-933-2359
AVX	803-946-0690	803-626-3123
Coilcraft	847-639-6400	847-639-1469
Murata	770-436-1300	770-436-3030
Taiyo Yuden	408-573-4150	408-573-4159
Toko	708-297-0070	708-699-1194

Note: *Please indicate that you are using the MAX2366 when contacting these component suppliers.*

Quick Start

The MAX2366 EV kit is fully assembled and factory tested. Follow the instructions in the *Connections and Setup* section.

Test Equipment Required

This section lists the recommended test equipment to verify the operation of the MAX2366. It is intended as a guide only, and substitutions may be possible.

- One TCXO (Temperature-Components Crystal Oscillator) at 19.68MHz for the PLL reference frequency
- An RF spectrum analyzer with optional digital modulation personality (Rohde & Schwarz FSEA30 or equivalent)
- A power supply that can provide 250mA at +3.3V
- A power supply that can provide 50mA at +5V
- An additional voltage source for control of VGA functions
- I/Q arbitrary waveform generator or CDMA generator (Agilent E4433B or equivalent)
- PC (486DX33 or better) with Win95®/98®, Win2000®, WinNT® 4.0 or later operating system and an available parallel port
- INTF2300 interface board (supplied with EV kit)

Connections and Setup

This section provides step-by-step instructions for getting the EV kit up and running in cellular and PCS CDMA modes.

Cellular CDMA Mode

Perform the following steps to evaluate the MAX2366 in the cellular CDMA mode:

1) Verify shunts JU1, JU2, and JU6–JU10 are in place.
2) Connect the INTF2300 interface cable as shown in Figure 8. **Note:** Pin 1 of the interface cable corresponds to the red wire. Pin 1 is designated in silkscreen on each of the PC boards.
3) Connect a +3.0V power supply to VBAT. The INTF2300 board derives its power from the MAX2366 EV kit.
4) Connect a +5.0V power supply to the header labeled "+5V".
5) Connect the TCXO to the REF port.
6) Connect a CDMA baseband signal generator to the I and Q ports using BNC connectors. Set the modulation to reverse-channel CDMA
7) Install and run Maxim CDMA control software. Software is also available on the web at *www.maxim-ic.com*. On the IC selection form, click on the MAX236X control button. Select P4. Click on register views.
8) With the MAX236X control screen active, set the registers according to Table 1.
9) Click on the Send Data button for each of the control registers located at the right of the screen. There are six registers that need to be downloaded to the IC. The Lock indicator on the screen (and on the EV board) should be red, indicating lock.
10) Apply 2.5V to GC via JU4.
11) Connect RFL to the spectrum analyzer. Configure the spectrum analyzer to measure ACPR for reverse-channel CDMA. Set the center frequency to 836MHz with a +10dBm reference level.
12) The output power should be about +7dBm after accounting for cable and connector loss. The ACPR at ±885kHz offset should be -54dBc, and the ACPR at ±1.98MHz offset should be -65dBc.

Win95®/98®, Win2000®, WinNT® are registered trademarks of Microsoft Corp.

Table 1. Register Settings

REGISTER	CELLULAR CDMA	RHF0 PCS CDMA
RFM (dec)	38214	58321
RFR (dec)	656	656
IFM (dec)	6519	6519
IFR (dec)	492	492
OPCTRL (hex)	890F	192F
CONFIG (hex)	C03F	C03F

RHF0 PCS CDMA Mode

Perform the following steps to evaluate the MAX2366 in the PCS CDMA mode:

1) Remove shunt JU2 and place shunt in JU3. This removes V_{CC} for the cellular VCO and applies V_{CC} to the PCS VCO.
2) With the MAX236X control screen active, set the registers according to Table 1.
3) Click on the Send Data buttons for each of the control registers located at the right of the screen. There are six registers that need to be downloaded to the IC. The lock indicator on the screen should be red, indicating lock.
4) Apply a 2.6V to VGC via JU4.
5) Connect the RFH0 port to the spectrum analyzer. Configure the spectrum analyzer to measure ACPR for reverse-channel CDMA. Set the center frequency to 1880.01MHz with a +10dBm reference level.
6) The output power should be about +6dBm after accounting for cable and connector loss. The ACPR at ±1.25MHz offset should be -54dBc.

Adjustments and Control

VGA Adjust

Apply a voltage from 0.5V to 2.6V to header "VGC" to adjust the IF and RF VGA of the MAX2366/MAX2367/MAX2368. The VGC voltage is filtered on the EV kit to minimize undesired amplitude modulation.

Interface Control

The interface port is designed to use a 20-pin ribbon cable (Figure 1); 10 pins are signal lines, and the other 10 pins are digital grounds. Pin 1 of the interface cable is red. Pin 1 is also designated in silk screen on each of the PC boards.

Detailed Description

The following section covers the EV kit's circuit blocks in detail (refer to the MAX2366/MAX2367/MAX2368 data sheet for additional information).

I/Q Inputs

The single-ended I/Q signals are converted to differential by operational amplifiers on the EV kit. The op amps also provide DC bias to the I/Q input pins of the MAX2366/MAX2367/MAX2368. The EV kits are set up to provide 415mVp-p differential to the IC when used with a 50Ω source that delivers 1Vp-p into 50Ω. For other I/Q levels, replace R9 and R18 with appropriate resistor values according to Table 2.

Table 2. Baseband Termination Resistor Values

MODULATION	I/Q DIFFERENTIAL VOLTAGE AT I_/Q_ INPUTS (mVp-p)	R9, R18 (Ω)*
Sinusoidal	600	75
CDMAONE	415	39
3GPP WCDMA	600	24
TDMA	600	22

**Set R9 and R18 for different I/Q input-source level (baseband waveform taken from the back panel of Agilent's E4433B signal generator).*

Programming Interface

The programming interface is provided by the INTF2300 interface board. The interface board buffers and level shifts logic levels from the PC to the MAX2366 EV kit (refer to the INTF2300 documentation). These logic signals control the logic pins as well as the serial interface.

IFLO

The IFLO output port provides an output signal that is either the IF VCO frequency or the VCO frequency divided by 2, depending on the setting of the BUF_DIV control bit. It can be enabled by setting the BUF_EN bit to 1 in the OPCTRL register.

TANK BYP

The tank bypass port is provided to drive the high-band tank with an external LO source. The VCO_BYPASS bit should be set to 1 to enable this port. Replace C25 with 0.01µF AC-coupling capacitor; replace R36 and R70 with 0Ω resistors; and remove R38, C12, C24, L10, D1, and D2.

REF

REF is the reference frequency input to the RF and IF PLL. The REF port is AC-coupled. Make sure the reference signal has low phase noise.

LOH

LOH is the high-band RF LO input port. To use this port with an external signal source, disconnect the PCS VCO by removing C39 and placing it at location C66.

LOL

LOL is the low-band RF LO input port. To use this port with an external signal source, disconnect the cellular VCO by removing C40 and placing it at location C65.

RFH1

RFH1 is a PCS PA driver output. Refer to Table 6 in the MAX2366/MAX2367/MAX2368 data sheet for the mode description.

RFL

RFL is the cellular band PA driver output. This port is active in cellular and FM modes. Refer to Table 6 in the MAX2366/MAX2367/MAX2368 data sheet for the mode description.

RFH0

RFH0 is a PCS PA driver output. Refer to Table 6 in the MAX2366/MAX2367/MAX2368 data sheet for the mode description.

IFINH and IFOUTH

For cascade evaluation, an on-board filter is connected between IFOUTH and IFINH. Select these ports by programming IF_SEL to 1. IFINH and IFOUTH are not connected to SMA connectors on the EV kit

IFINL and IFOUTL

For cascade evaluation, an on-board filter is connected between IFOUTL and IFINL. Select these ports by programming IF_SEL to 0. For individual IF modulator and upconverter evaluation, remove R44, R49, R55, R58, and install R25, R33, R34, and R39 with 0Ω resistors. This connects the IFINL_ and IFOUTL_ pins to the IFINL and IFOUTL SMA connectors. The matching networks are tuned to 130MHz.

VBAT/VREG

VBAT supplies V_{CC} to the PA driver circuitry. This may be an unregulated battery voltage. The PA drivers are open collector. Jumpers are provided to enable current measurement to each functional block of the IC (Table 3).

VREG is connected to the output of the U2 regulator on the EV Kit. Do not connect an external supply voltage to VREG header.

RBIAS

When resistor R73 is stuffed (typically 16kΩ), a bias voltage may be applied to the RBIAS header to adjust the PA driver bias current. Internal to the IC, pin 12 is set to 1.1V. Output linearity or efficiency may be improved by adjusting PA driver current.

Table 3. Jumpers

JUMPER NO.	ASSOCIATED FUNCTIONAL BLOCK
JU1	V_{CC} for VCC DRIVER
JU2	External cellular VCO
JU3	External PCS VCO
JU4	VGC jumper
JU6	PA predrivers V_{CC}
JU7	RF mixer V_{CC}
JU8	IF modulator V_{CC}
JU9	Digital V_{CC}
JU10	RF charge pump V_{CC}

Layout Considerations

The MAX2366 EV kit can serve as a guide for your board layout. Keep PC board trace lengths as short as possible to minimize parasitics. Also, keep decoupling capacitors as close to the IC as possible with a direct connection to the ground plane.

PC Board Construction

The MAX2366 EV kit PC board uses a 14mil-wide trace for 50Ω transmission line. The PC board has an 8mil-layer profile on FR4 with a dielectric constant of 4.5.

INTF2300 SPI Interface Board

The INTF2300 interface board is used to interface 3-wire SPI protocol from a PC's parallel port to the EV kit. This board will level translate 5V logic from the PC to V_{CC} of the EV kit (typically this will be 3.3V logic). The INTF2300 also provides buffering and EMI filtering. Its absolute maximum supply voltage is 4.6V, limited by the breakdown of the buffer IC. The recommended operating supply voltage range is +2.7V to +3.6V.

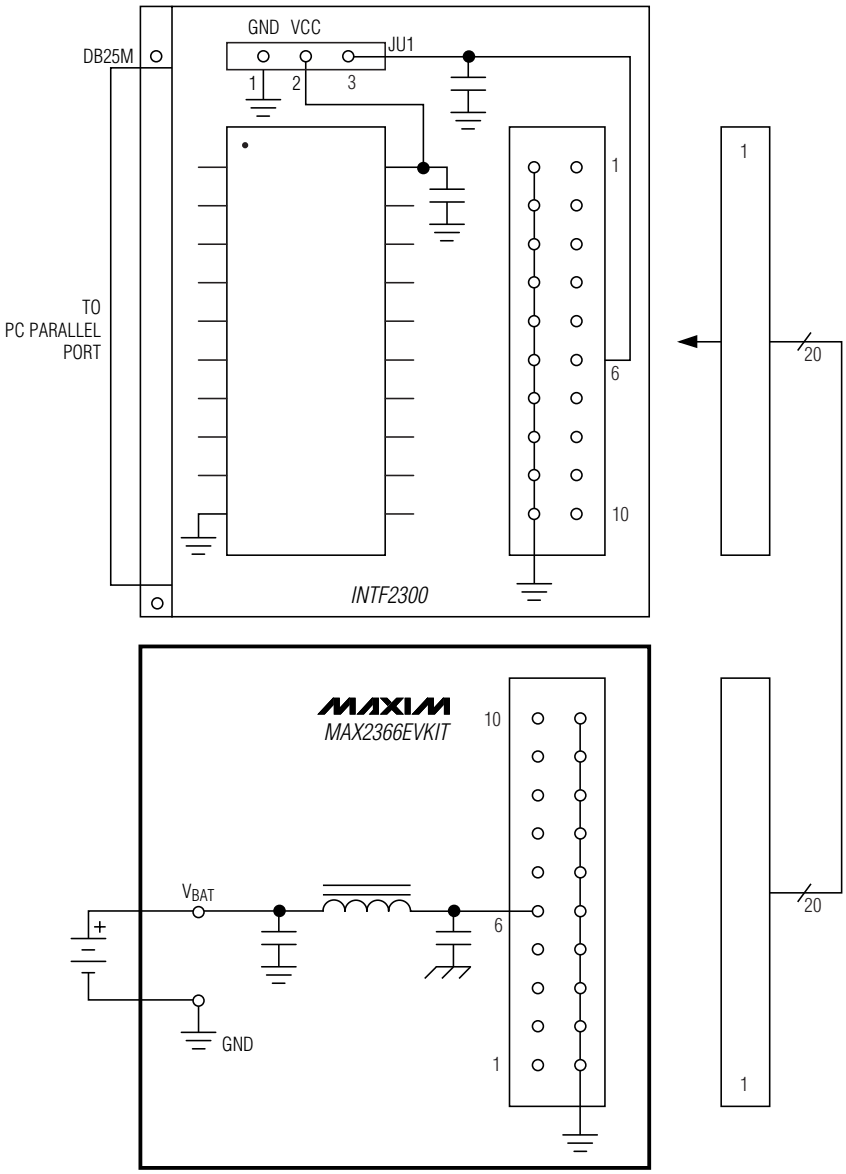

Figure 1. INTF2300 with MAX2366 EV Kit Providing Filtered Supply

MAX2366 Evaluation Kit

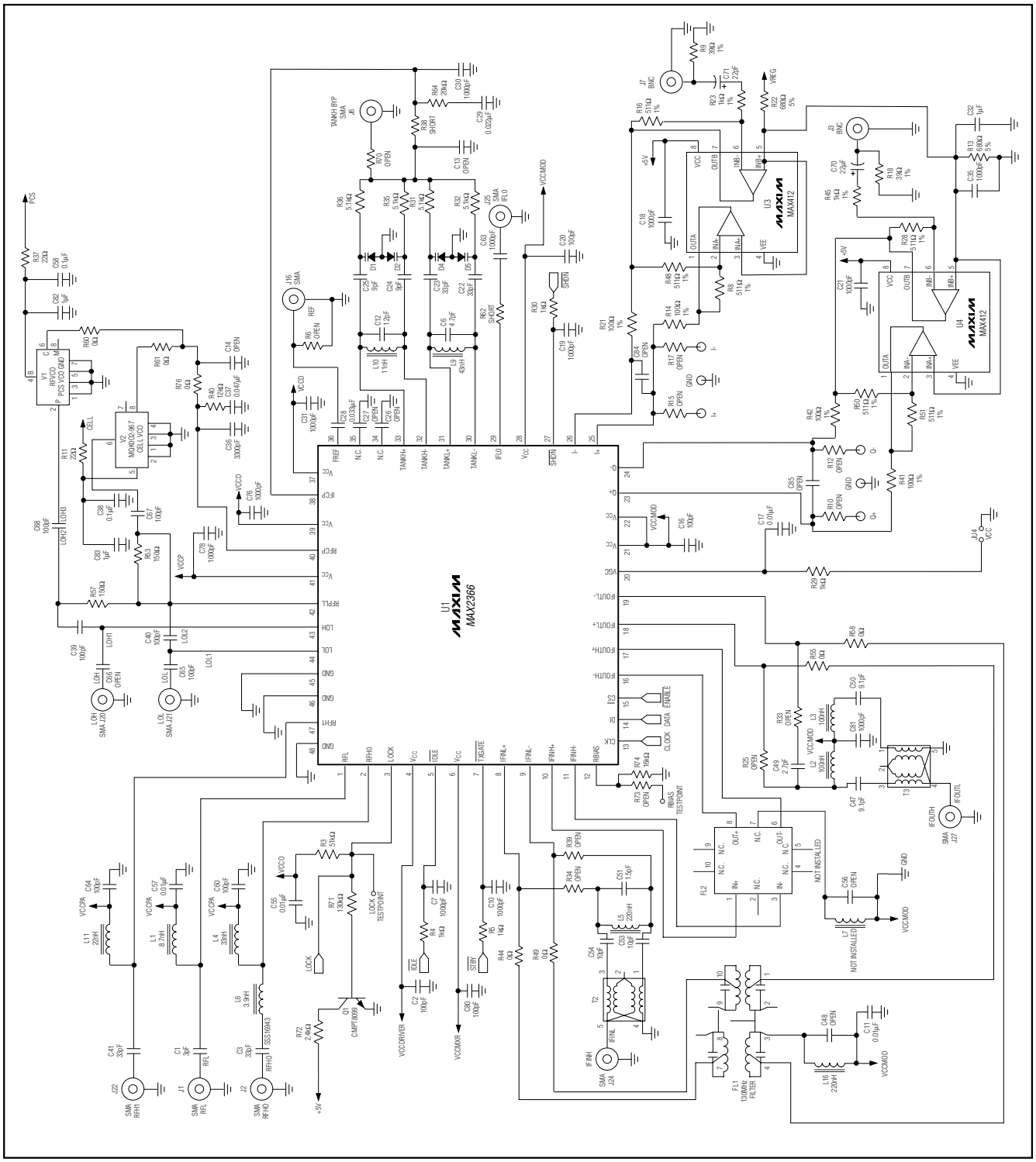

Figure 2. MAX2366 EV Kit Schematic

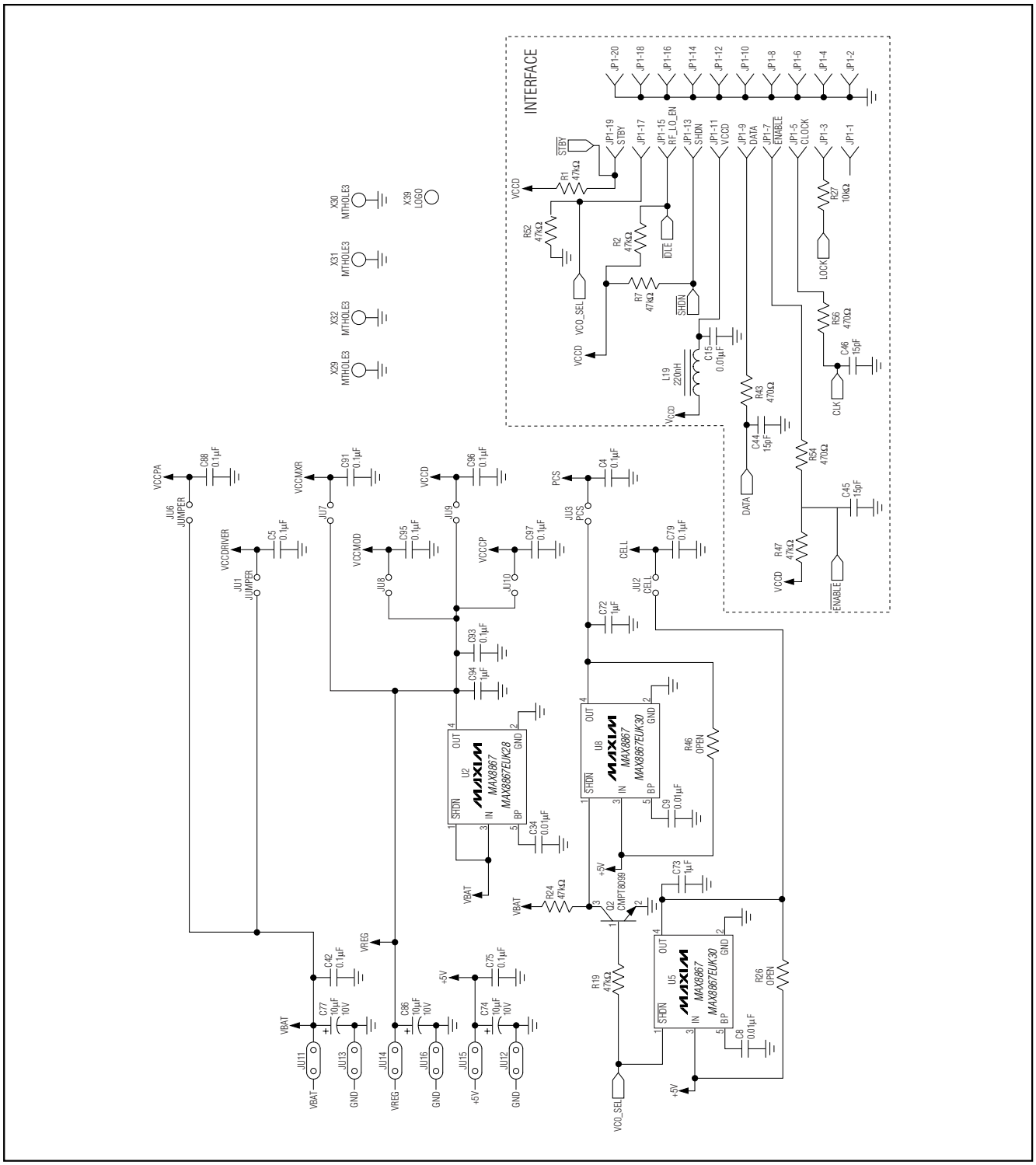

Figure 2. MAX2366 EV Kit Schematic (continued)

MAX2366 Evaluation Kit

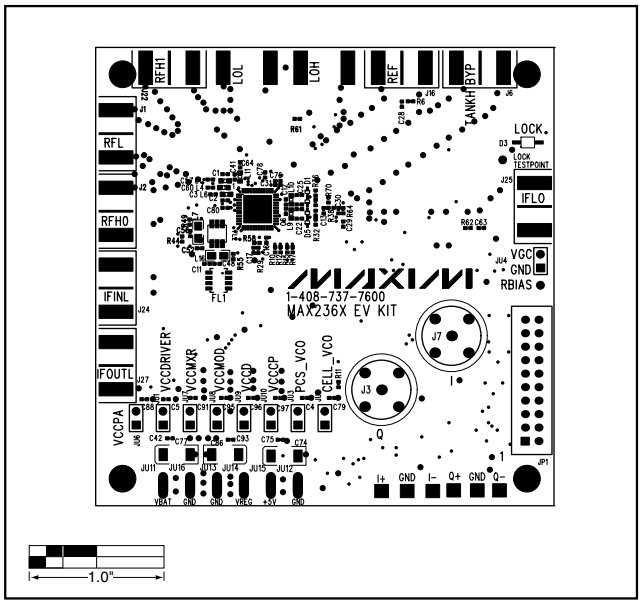

Figure 3. MAX2366 EV Kit Component Placement Guide—Component Side (Top View)

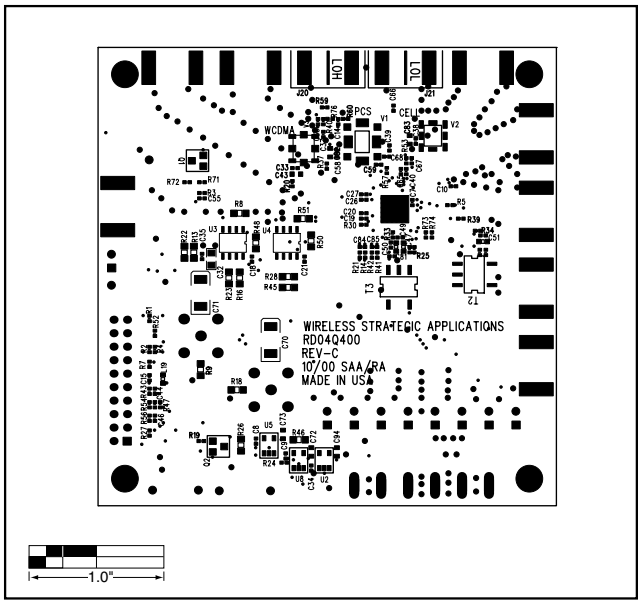

Figure 4. MAX2366 EV Kit Component Placement Guide—Solder Side (Bottom View)

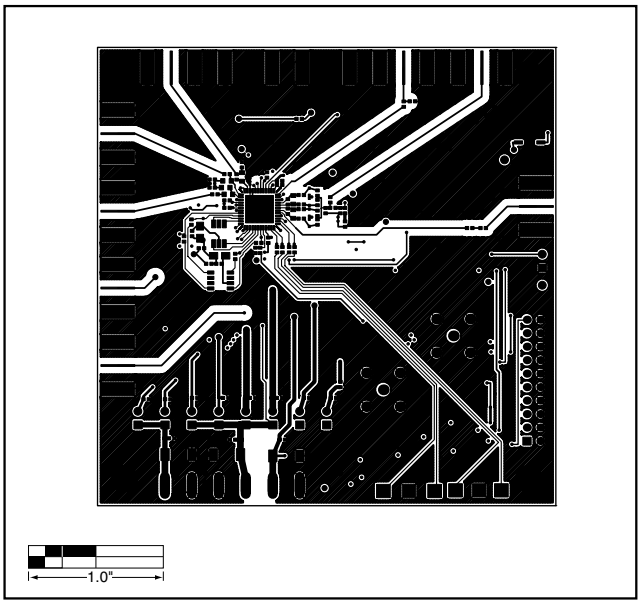

Figure 5. MAX2366 EV Kit PC Board Layout—Component Side (Top View)

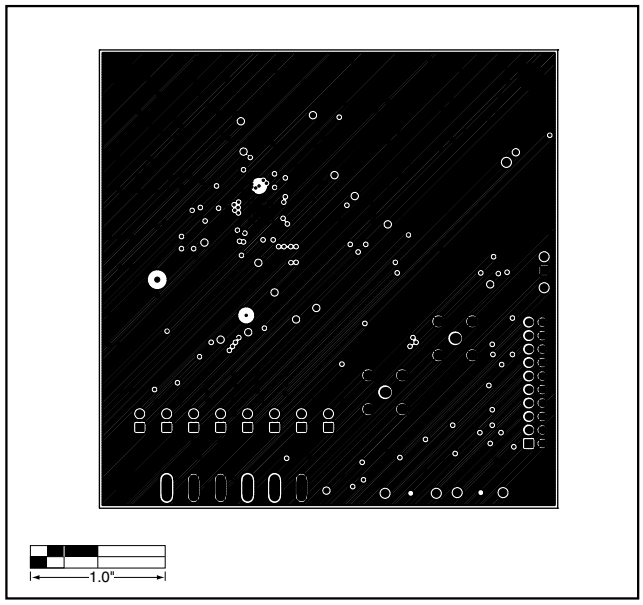

Figure 6. MAX2366 EV Kit PC Board Layout—Ground Plane (Top View)

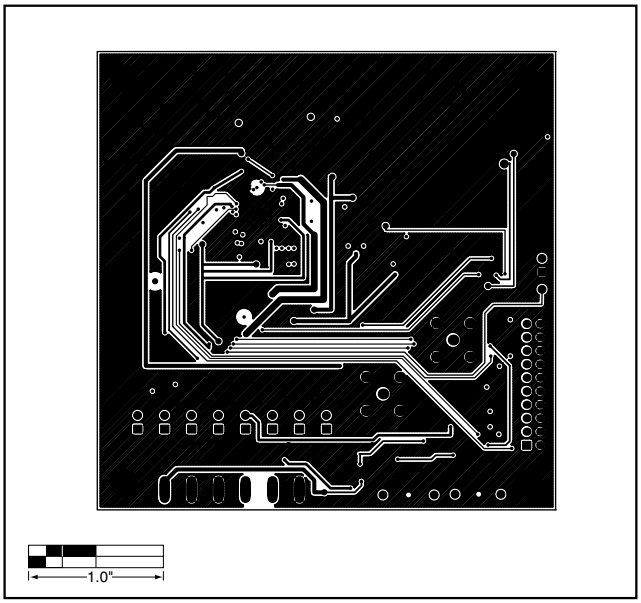

Figure 7. MAX2366 EV Kit PC Board Layout—Inner Layer (Top View)

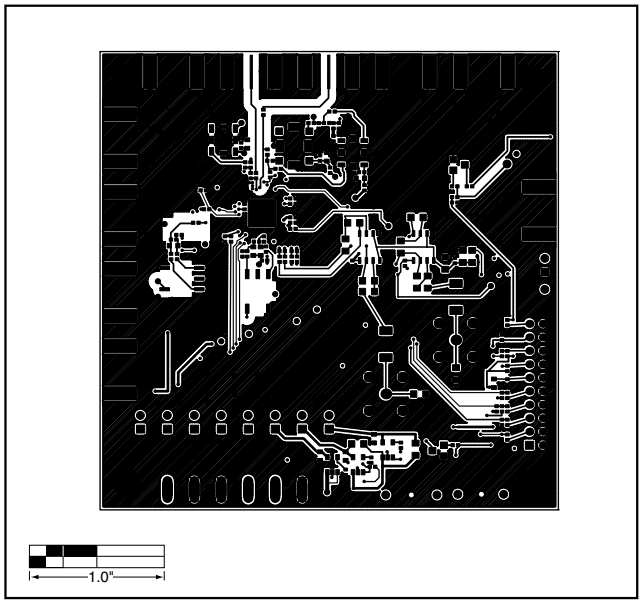

Figure 8. MAX2366 EV Kit PC Board Layout—Solder Side (Bottom View)

Maxim cannot assume responsibility for use of any circuitry other than circuitry entirely embodied in a Maxim product. No circuit patent licenses are implied. Maxim reserves the right to change the circuitry and specifications without notice at any time.

© 2001 Maxim Integrated Products Printed USA MAXIM is a registered trademark of Maxim Integrated Products.