查询LTC1667CG供应商 捷多邦，专业PCB打样工厂，24小时加急出货

LTC1666/LTC1667/LTC1668

12-Bit, 14-Bit, 16-Bit, 50Msps DACs

FEATURES

- **50Msps Update Rate**
- **Pin Compatible 12-Bit, 14-Bit and 16-Bit Devices**
- **High Spectral Purity: 87dB SFDR at 1MHz f_{OUT}**
- **5pV-s Glitch Impulse**
- Differential Current Outputs
- 20ns Settling Time
- Low Power: 180mW from ±5V Supplies
- TTL/CMOS (3.3V or 5V) Inputs
- Small Package: 28-Pin SSOP

APPLICATIONS

- Cellular Base Stations
- Multicarrier Base Stations
- Wireless Communication
- Direct Digital Synthesis (DDS)
- xDSL Modems
- Arbitrary Waveform Generation
- Automated Test Equipment
- Instrumentation

DESCRIPTION

The LTC®1666/LTC1667/LTC1668 are 12-/14-/16-bit, 50Msps differential current output DACs implemented on a high performance BiCMOS process with laser trimmed, thin-film resistors. The combination of a novel current-steering architecture and a high performance process produces DACs with exceptional AC and DC performance. The LTC1668 is the first 16-bit DAC in the marketplace to exhibit an SFDR (spurious free dynamic range) of 87dB for an output signal frequency of 1MHz.

Operating from ±5V supplies, the LTC1666/LTC1667/LTC1668 can be configured to provide full-scale output currents up to 10mA. The differential current outputs of the DACs allow single-ended or true differential operation. The –1V to 1V output compliance of the LTC1666/LTC1667/LTC1668 allows the outputs to be connected directly to external resistors to produce a differential output voltage without degrading the converter's linearity. Alternatively, the outputs can be connected to the summing junction of a high speed operational amplifier, or to a transformer.

The LTC1666/LTC1667/LTC1668 are pin compatible and are available in a 28-pin SSOP and are fully specified over the industrial temperature range.

LT, LTC and LT are registered trademarks of Linear Technology Corporation.

TYPICAL APPLICATION

LTC1668, 16-Bit, 50Msps DAC

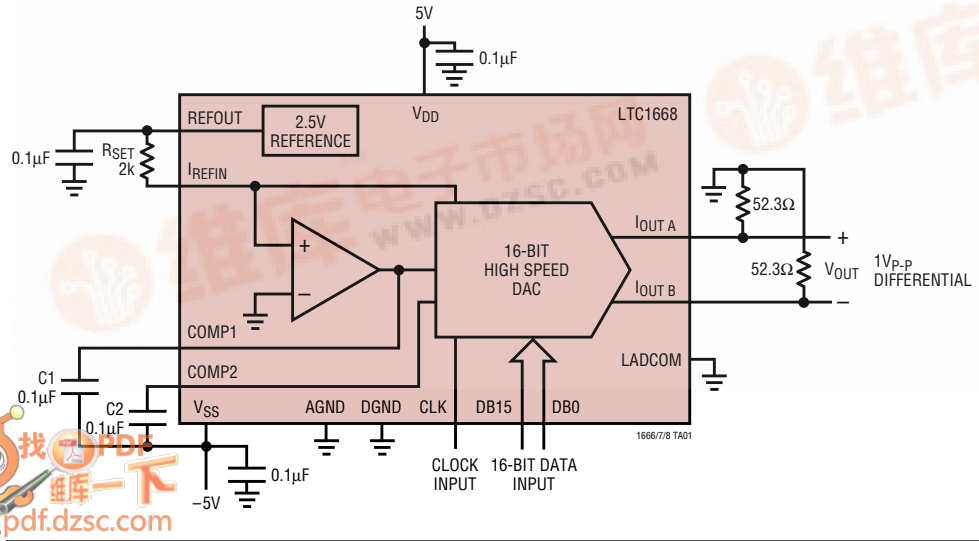

LTC1668 SFDR vs f_{OUT} and f_{CLOCK}

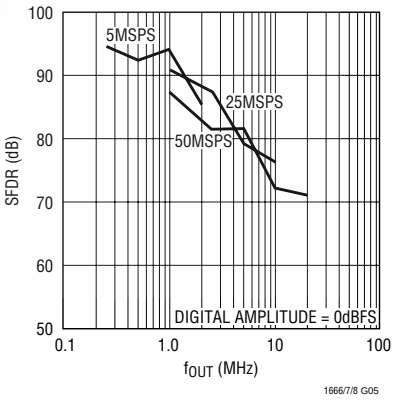

找PDF 维库一下 pdf.dzsc.com

ABSOLUTE MAXIMUM RATINGS (Note 1)

Supply Voltage (V_{DD}) 6V
Negative Supply Voltage (V_{SS}) ..... –6V
Total Supply Voltage (V_{DD} to V_{SS}) 12V
Digital Input Voltage ..... –0.3V to (V_{DD} + 0.3V)
Analog Output Voltage
($I_{OUT\ A}$ and $I_{OUT\ B}$) ..... (V_{SS} – 0.3V) to (V_{DD} + 0.3V)
Power Dissipation 500mW
Operating Temperature Range
LTC1666C/LTC1667C/LTC1668C ..... 0°C to 70°C
LTC1666I/LTC1667I/LTC1668I ..... –40°C to 85°C
Storage Temperature Range ..... –65°C to 150°C
Lead Temperature (Soldering, 10 sec) ..... 300°C

PACKAGE/ORDER INFORMATION

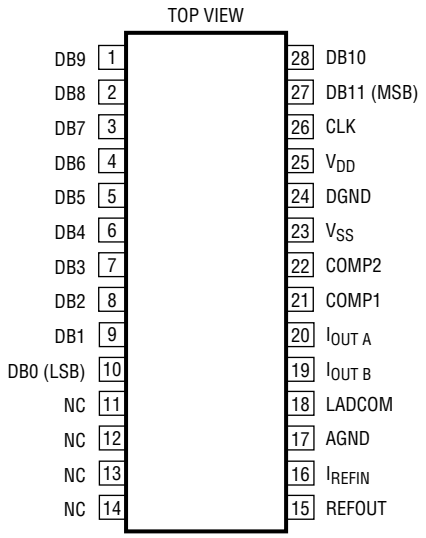

G PACKAGE
28-LEAD PLASTIC SSOP
T_{JMAX} = 110°C, θ_{JA} = 100°C/W

ORDER PART NUMBER

LTC1666CG
LTC1666IG

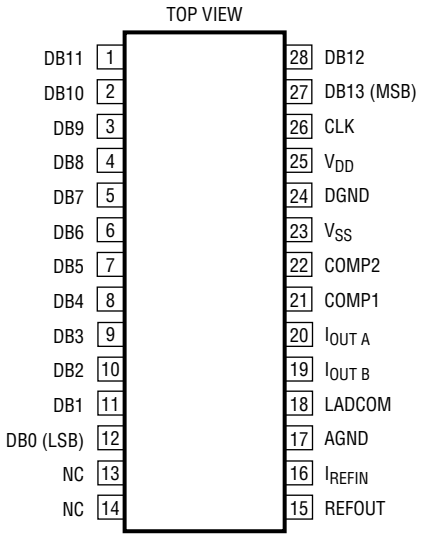

G PACKAGE
28-LEAD PLASTIC SSOP
T_{JMAX} = 110°C, θ_{JA} = 100°C/W

ORDER PART NUMBER

LTC1667CG
LTC1667IG

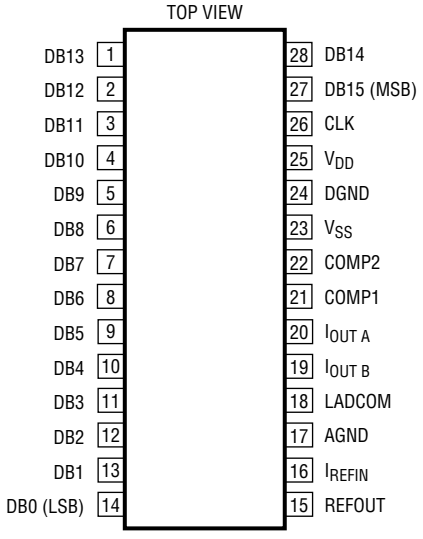

G PACKAGE
28-LEAD PLASTIC SSOP
T_{JMAX} = 110°C, θ_{JA} = 100°C/W

ORDER PART NUMBER

LTC1668CG
LTC1668IG

Consult LTC Marketing for parts specified with wider operating temperature ranges.

ELECTRICAL CHARACTERISTICS

The ● denotes specifications which apply over the full operating temperature range, otherwise specifications are at T_A = 25°C. V_{DD} = 5V, V_{SS} = –5V, LADCOM = AGND = DGND = 0V, I_{OUTFS} = 10mA.

SYMBOL	PARAMETER	CONDITIONS		LTC1666 MIN	LTC1666 TYP	LTC1666 MAX	LTC1667 MIN	LTC1667 TYP	LTC1667 MAX	LTC1668 MIN	LTC1668 TYP	LTC1668 MAX	UNITS
DC Accuracy (Measured at $I_{OUT\ A}$, Driving a Virtual Ground)													
	Resolution		●	12			14			16			Bits
	Monotonicity			12			14			14			Bits
INL	Integral Nonlinearity	(Note 2)				±1			±2			±8	LSB
DNL	Differential Nonlinearity	(Note 2)				±1			±1		±1	±4	LSB
	Offset Error				0.1	±0.2		0.1	±0.2		0.1	±0.2	% FSR
	Offset Error Drift				5			5			5		ppm/°C
GE	Gain Error	Internal Reference, R_{IREFIN} = 2k External Reference, V_{REF} = 2.5V, R_{IREFIN} = 2k				2 1			2 1			2 1	% FSR % FSR
	Gain Error Drift	Internal Reference External Reference			50 30			50 30			50 30		ppm/°C ppm/°C
PSRR	Power Supply Rejection Ratio	V_{DD} = 5V ±5% V_{SS} = –5V ±5%				±0.1 ±0.2			±0.1 ±0.2			±0.1 ±0.2	% FSR/V % FSR/V
AC Linearity													
SFDR	Spurious Free Dynamic Range to Nyquist	f_{CLK} = 25Msps, f_{OUT} = 1MHz 0dB FS Output –6dB FS Output –12dB FS Output		76			78			78	87 87 83		dB dB dB
		f_{CLK} = 50Msps, f_{OUT} = 1MHz									85		dB
		f_{CLK} = 50Msps, f_{OUT} = 2.5MHz									81		dB
		f_{CLK} = 50Msps, f_{OUT} = 5MHz									79		dB
		f_{CLK} = 50Msps, f_{OUT} = 20MHz									70		dB
	Spurious Free Dynamic Range Within a Window	f_{CLK} = 25Msps, f_{OUT} = 1MHz, 2MHz Span		85			86			86	96		dB
		f_{CLK} = 50Msps, f_{OUT} = 5MHz, 4MHz Span									88		dB
THD	Total Harmonic Distortion	f_{CLK} = 25Msps, f_{OUT} = 1MHz f_{CLK} = 50Msps, f_{OUT} = 5MHz				–75			–77		–84 –78	–77	dB dB

ELECTRICAL CHARACTERISTICS

The ● denotes specifications which apply over the full operating temperature range, otherwise specifications are at T_A = 25°C. V_{DD} = 5V, V_{SS} = –5V, LADCOM = AGND = DGND = 0V, I_{OUTFS} = 10mA.

SYMBOL	PARAMETER	CONDITIONS		LTC1666/LTC1667/LTC1668 MIN	TYP	MAX	UNITS
Analog Output							
I_{OUTFS}	Full-Scale Output Current		●	1		10	mA
	Output Compliance Range	I_{FS} = 10mA	●	–1		1	V
	Output Resistance; $R_{IOUT\ A}$, $R_{IOUT\ B}$	$I_{OUT\ A,\ B}$ to LADCOM	●	0.7	1.1	1.5	kΩ
	Output Capacitance				5		pF
Reference Output							
	Reference Voltage	REFOUT Tied to I_{REFIN} Through 2kΩ		2.475	2.5	2.525	V
	Reference Output Drift				25		ppm/°C
	Reference Output Load Regulation	I_{LOAD} = 0mA to 5mA			6		mV/mA
Reference Input							
	Reference Small-Signal Bandwidth	I_{FS} = 10mA, C_{COMP1} = 0.1µF			20		kHz
Power Supply							
V_{DD}	Positive Supply Voltage		●	4.75	5	5.25	V
V_{SS}	Negative Supply Voltage		●	–4.75	–5	–5.25	V
I_{DD}	Positive Supply Current	I_{FS} = 10mA, f_{CLK} = 25Msps, f_{OUT} = 1MHz	●		3	5	mA
I_{SS}	Negative Supply Current	I_{FS} = 10mA, f_{CLK} = 25Msps, f_{OUT} = 1MHz	●		33	40	mA
P_{DIS}	Power Dissipation	I_{FS} = 10mA, f_{CLK} = 25Msps, f_{OUT} = 1MHz I_{FS} = 1mA, f_{CLK} = 25Msps, f_{OUT} = 1MHz			180 85		mW mW
Dynamic Performance (Differential Transformer Coupled Output, 50Ω Double Terminated, Unless Otherwise Noted)							
f_{CLOCK}	Maximum Update Rate		●	50	75		Msps
t_S	Output Settling Time	To 0.1% FSR			20		ns
t_{PD}	Output Propagation Delay				8		ns
	Glitch Impulse	Single Ended Differential			15 5		pV-s pV-s
t_r	Output Rise Time				4		ns
t_f	Output Fall Time				4		ns
i_{NO}	Output Noise				50		pA/√Hz
Digital Inputs							
V_{IH}	Digital High Input Voltage		●	2.4			V
V_{IL}	Digital Low Input Voltage		●			0.8	V
I_{IN}	Digital Input Current		●			±10	µA
C_{IN}	Digital Input Capacitance				5		pF
t_{DS}	Input Setup Time		●	8			ns
t_{DH}	Input Hold Time		●	4			ns
t_{CLKH}	Clock High Time		●	5			ns
t_{CLKL}	Clock Low Time		●	8			ns

Note 1: Absolute Maximum Ratings are those values beyond which the life of the device may be impaired.

Note 2: For the LTC1666, ±1LSB = ±0.024% of full scale;
for the LTC1667, ±1LSB = ±0.006% of full scale = ±61ppm of full scale;
for the LTC1668, ±1LSB = ±0.0015% of full scale = ±15.3ppm of full scale.

TYPICAL PERFORMANCE CHARACTERISTICS (LTC1668)

Single Tone SFDR at 50MSPS

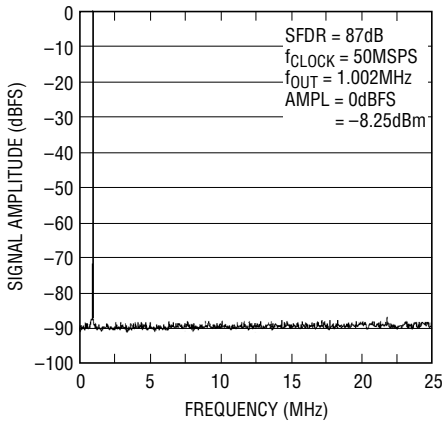

2-Tone SFDR

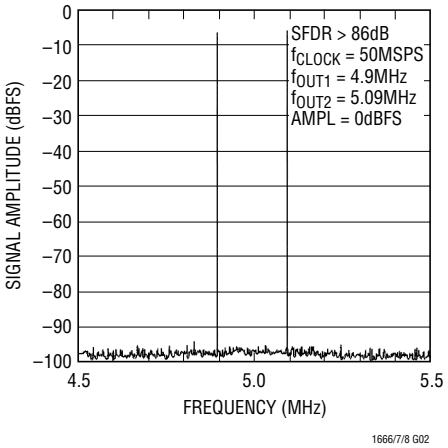

4-Tone SFDR, f_{CLOCK} = 50MSPS

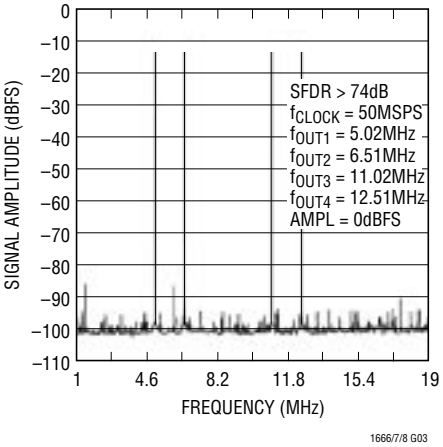

4-Tone SFDR, f_{CLOCK} = 5MSPS

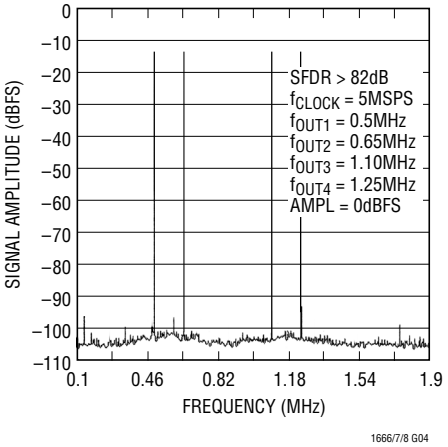

SFDR vs f_{OUT} and f_{CLOCK}

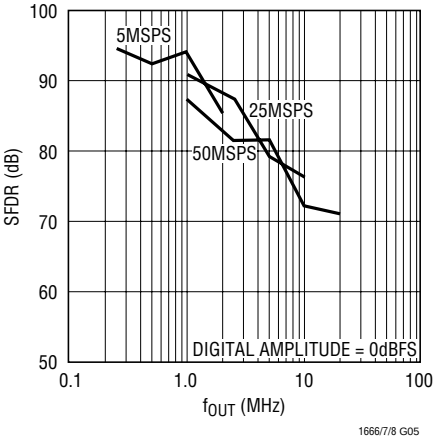

SFDR vs f_{OUT} and Digital Amplitude (dBFS) at f_{CLOCK} = 5MSPS

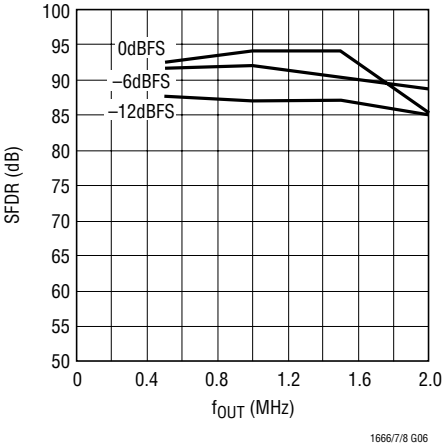

SFDR vs f_{OUT} and Digital Amplitude (dBFS) at f_{CLOCK} = 25MSPS

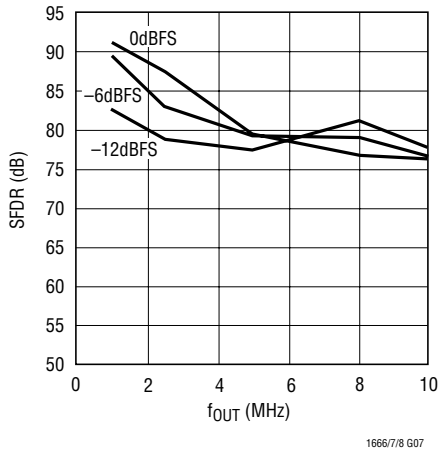

SFDR vs f_{OUT} and Digital Amplitude (dBFS) at f_{CLOCK} = 50MSPS

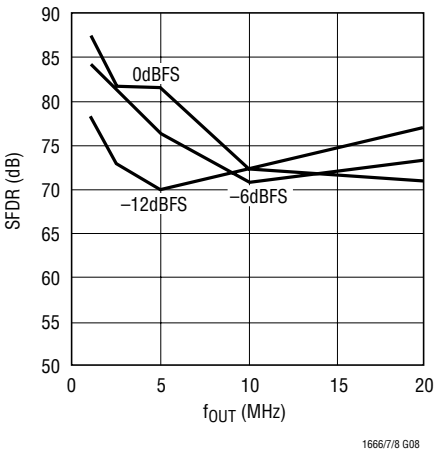

SFDR vs f_{OUT} and I_{OUTFS} at f_{CLOCK} = 25MSPS

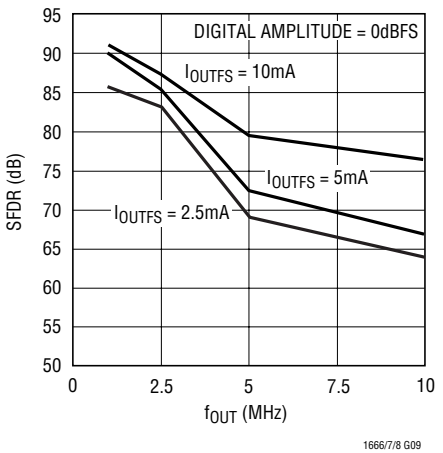

TYPICAL PERFORMANCE CHARACTERISTICS (LTC1668)

SFDR vs Digital Amplitude (dBFS) and f_{CLOCK} at $f_{OUT} = f_{CLOCK}/11$

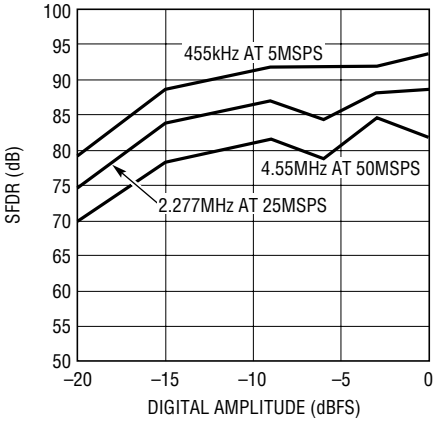

SFDR vs Digital Amplitude (dBFS) and f_{CLOCK} at $f_{OUT} = f_{CLOCK}/5$

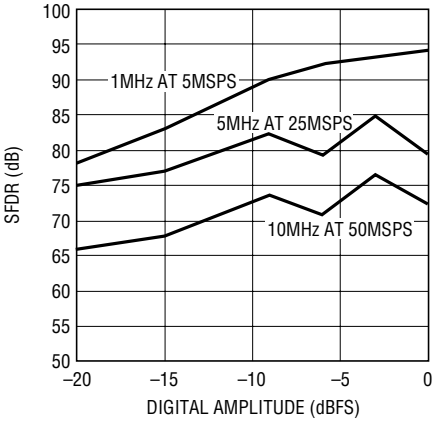

Single-Ended Outputs Full-Scale Transition

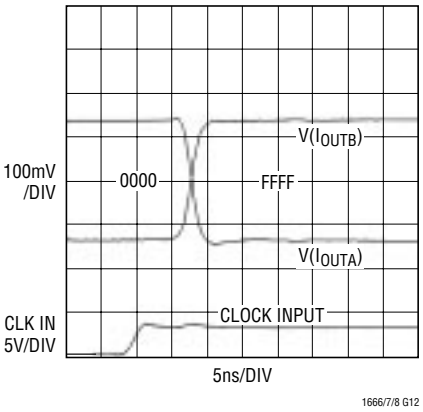

Differential Output Full-Scale Transition

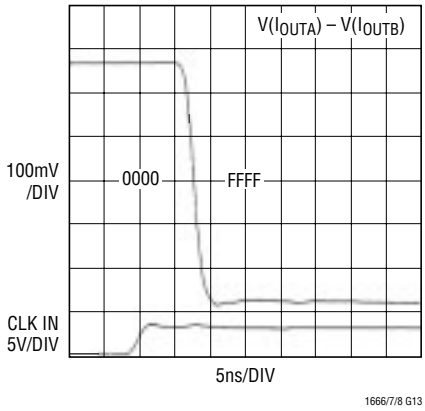

Single-Ended Output Full-Scale Transition

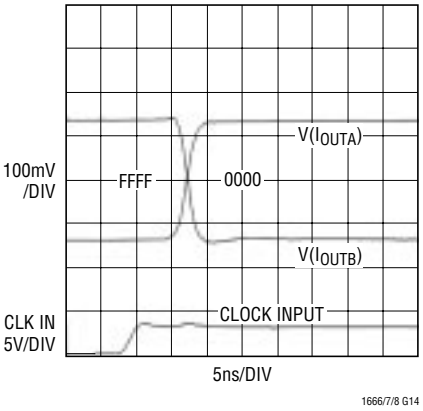

Differential Output Full-Scale Transition

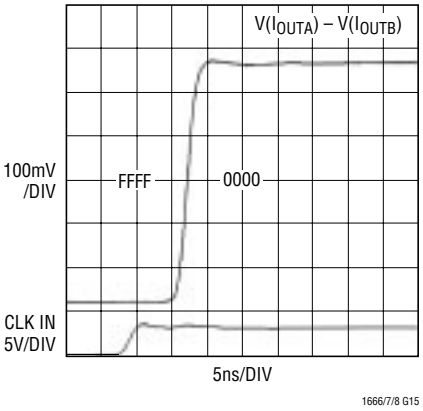

Single-Ended Midscale Glitch Impulse

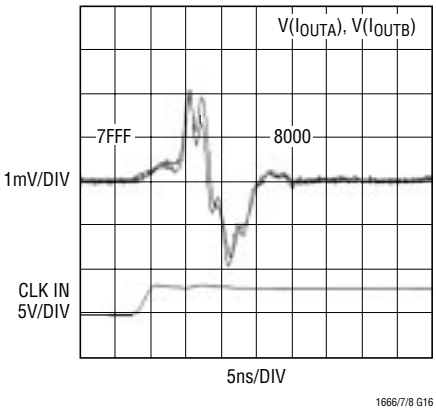

Differential Midscale Glitch Impulse

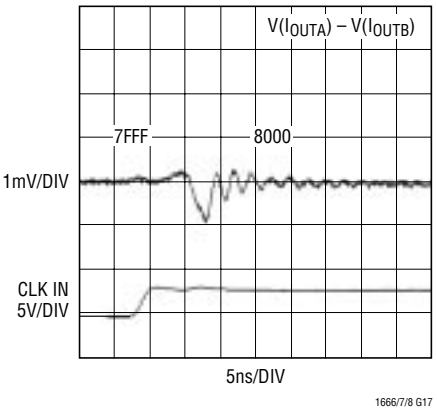

Integral Nonlinearity

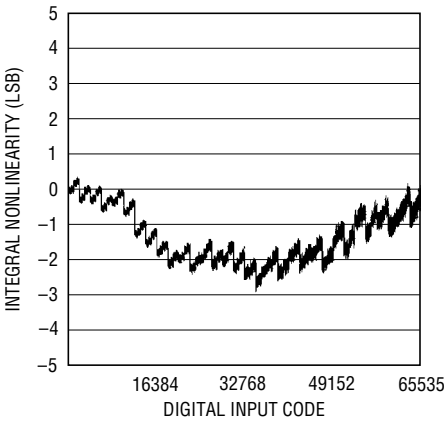

TYPICAL PERFORMANCE CHARACTERISTICS (LTC1668)

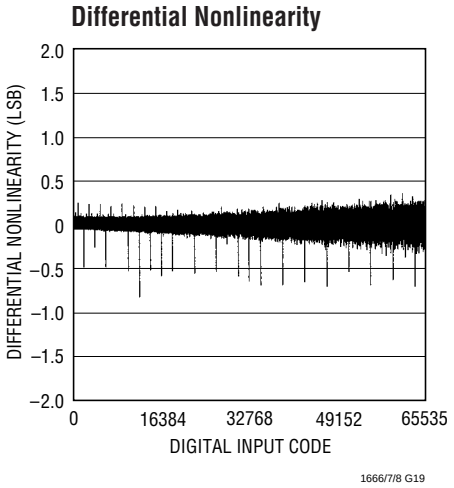

PIN FUNCTIONS

LTC1666

REFOUT (Pin 15): Internal Reference Voltage Output. Nominal value is 2.5V. Requires a 0.1μF bypass capacitor to AGND.

I_{REFIN} (Pin 16): Reference Input Current. Nominal value is 1.25mA for I_{FS} = 10mA. $I_{FS} = I_{REFIN} \bullet 8$.

AGND (Pin 17): Analog Ground.

LADCOM (Pin 18): Attenuator Ladder Common. Normally tied to GND.

$I_{OUT\ B}$ (Pin 19): Complementary DAC Output Current. Full-scale output current occurs when all data bits are 0s.

$I_{OUT\ A}$ (Pin 20): DAC Output Current. Full-scale output current occurs when all data bits are 1s.

COMP1 (Pin 21): Current Source Control Amplifier Compensation. Bypass to V_{SS} with 0.1μF.

COMP2 (Pin 22): Internal Bypass Point. Bypass to V_{SS} with 0.1μF.

V_{SS} (Pin 23): Negative Supply Voltage. Nominal value is –5V.

DGND (Pin 24): Digital Ground.

V_{DD} (Pin 25): Positive Supply Voltage. Nominal value is 5V.

CLK (Pin 26): Clock Input. Data is latched and the output is updated on positive edge of clock.

DB11 to DB0 (Pins 27, 28, 1 to 10): Digital Input Data Bits.

PIN FUNCTIONS

LTC1667

REFOUT (Pin 15): Internal Reference Voltage Output. Nominal value is 2.5V. Requires a 0.1μF bypass capacitor to AGND.

I_{REFIN} (Pin 16): Reference Input Current. Nominal value is 1.25mA for I_{FS} = 10mA. $I_{FS} = I_{REFIN} \bullet 8$.

AGND (Pin 17): Analog Ground.

LADCOM (Pin 18): Attenuator Ladder Common. Normally tied to GND.

$I_{OUT\ B}$ (Pin 19): Complementary DAC Output Current. Full-scale output current occurs when all data bits are 0s.

$I_{OUT\ A}$ (Pin 20): DAC Output Current. Full-scale output current occurs when all data bits are 1s.

COMP1 (Pin 21): Current Source Control Amplifier Compensation. Bypass to V_{SS} with 0.1μF.

COMP2 (Pin 22): Internal Bypass Point. Bypass to V_{SS} with 0.1μF.

V_{SS} (Pin 23): Negative Supply Voltage. Nominal value is –5V.

DGND (Pin 24): Digital Ground.

V_{DD} (Pin 25): Positive Supply Voltage. Nominal value is 5V.

CLK (Pin 26): Clock Input. Data is latched and the output is updated on positive edge of clock.

DB13 to DB0 (Pins 27, 28, 1 to 12): Digital Input Data Bits.

LTC1668

REFOUT (Pin 15): Internal Reference Voltage Output. Nominal value is 2.5V. Requires a 0.1μF bypass capacitor to AGND.

I_{REFIN} (Pin 16): Reference Input Current. Nominal value is 1.25mA for I_{FS} = 10mA. $I_{FS} = I_{REFIN} \bullet 8$.

AGND (Pin 17): Analog Ground.

LADCOM (Pin 18): Attenuator Ladder Common. Normally tied to GND.

$I_{OUT\ B}$ (Pin 19): Complementary DAC Output Current. Full-scale output current occurs when all data bits are 0s.

$I_{OUT\ A}$ (Pin 20): DAC Output Current. Full-scale output current occurs when all data bits are 1s.

COMP1 (Pin 21): Current Source Control Amplifier Compensation. Bypass to V_{SS} with 0.1μF.

COMP2 (Pin 22): Internal Bypass Point. Bypass to V_{SS} with 0.1μF.

V_{SS} (Pin 23): Negative Supply Voltage. Nominal value is –5V.

DGND (Pin 24): Digital Ground.

V_{DD} (Pin 25): Positive Supply Voltage. Nominal value is 5V.

CLK (Pin 26): Clock Input. Data is latched and the output is updated on positive edge of clock.

DB15 to DB0 (Pins 27, 28, 1 to 14): Digital Input Data Bits.

BLOCK DIAGRAM

LTC1666

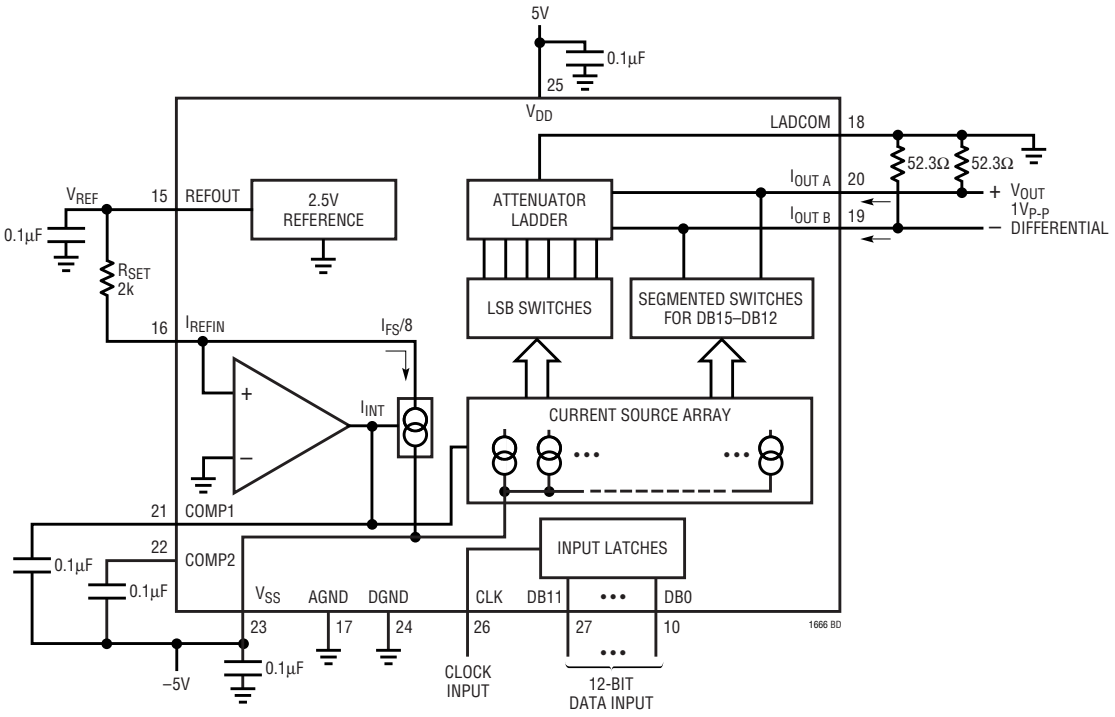

LTC1667

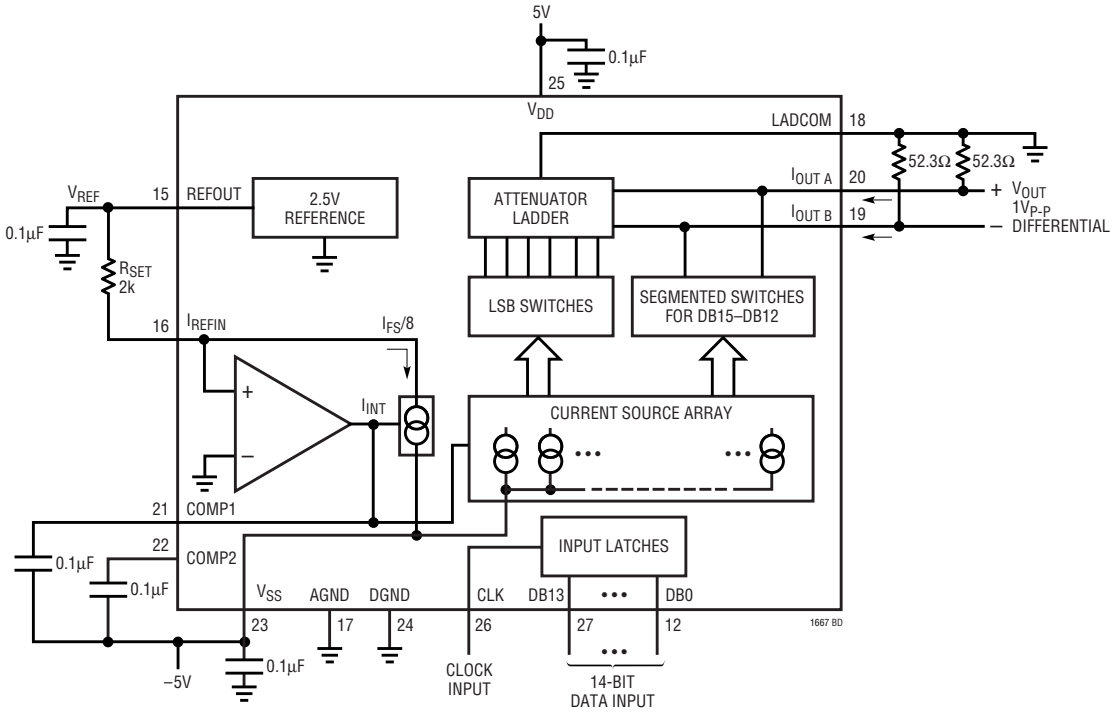

BLOCK DIAGRAM

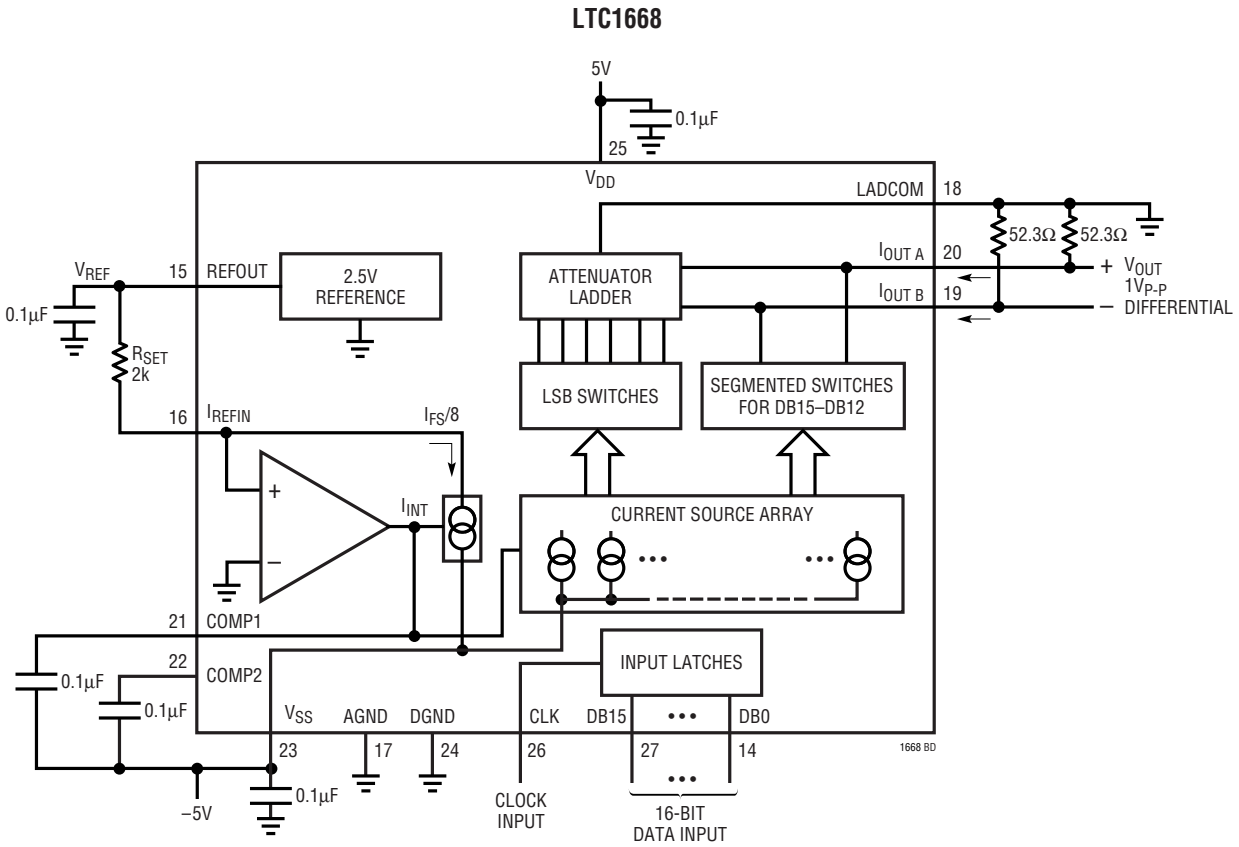

TIMING DIAGRAM

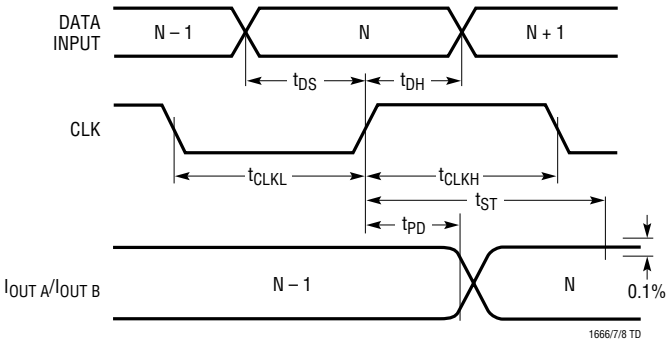

APPLICATIONS INFORMATION

Theory of Operation

The LTC1666/LTC1667/LTC1668 are high speed current steering 12-/14-/16-bit DACs made on an advanced BiCMOS process. Precision thin film resistors and well matched bipolar transistors result in excellent DC linearity and stability. A low glitch current switching design gives excellent AC performance at sample rates up to 50Msps. The devices are complete with a 2.5V internal bandgap reference and edge triggered latches, and set a new standard for DAC applications requiring very high dynamic range at output frequencies up to several megahertz.

Referring to the Block Diagrams, the DACs contain an array of current sources that are steered to I_{OUTA} or I_{OUTB} with NMOS differential current switches. The four most significant bits are made up of 15 current segments of equal weight. The remaining lower bits are binary weighted, using a combination of current scaling and a differential resistive attenuator ladder. All bits and segments are precisely matched, both in current weight for DC linearity, and in switch timing for low glitch impulse and low spurious tone AC performance.

Setting the Full-Scale Current, I_{OUTFS}

The full-scale DAC output current, I_{OUTFS}, is nominally 10mA, and can be adjusted down to 1mA. Placing a resistor, R_{SET}, between the REFOUT pin, and the I_{REFIN} pin sets I_{OUTFS} as follows.

The internal reference control loop amplifier maintains a virtual ground at I_{REFIN} by servoing the internal current source, I_{INT}, to sink the exact current flowing into I_{REFIN}. I_{INT} is a scaled replica of the DAC current sources and $I_{OUTFS} = 8 \bullet (I_{INT})$, therefore:

$$I_{OUTFS} = 8 \bullet (I_{REFIN}) = 8 \bullet (V_{REF}/R_{SET}) \qquad (1)$$

For example, if R_{SET} = 2k and is tied to V_{REF} = REFOUT = 2.5V, I_{REFIN} = 2.5/2k = 1.25mA and I_{OUTFS} = 8 • (1.25mA) = 10mA.

The reference control loop requires a capacitor on the COMP1 pin for compensation. For optimal AC performance, C_{COMP1} should be connected to V_{SS} and be placed very close to the package (less than 0.1").

For fixed reference voltage applications, C_{COMP1} should be 0.1µF or more. The reference control loop small-signal bandwidth is approximately $1/(2\pi) \bullet C_{COMP1} \bullet 80$ or 20kHz for C_{COMP1} = 0.1µF.

Reference Operation

The onboard 2.5V bandgap voltage reference drives the REFOUT pin. It is trimmed and specified to drive a 2k resistor tied from REFOUT to I_{REFIN}, corresponding to a 1.25mA load (I_{OUTFS} = 10mA). REFOUT has nominal output impedance of 6Ω, or 0.24% per mA, so it must be buffered to drive any additional external load. A 0.1µF capacitor is required on the REFOUT pin for compensation. Note that this capacitor is required for stability, even if the internal reference is not being used.

External Reference Operation

Figure 1, shows how to use an external reference to control the LTC1666/LTC1667/LTC1668 full-scale current.

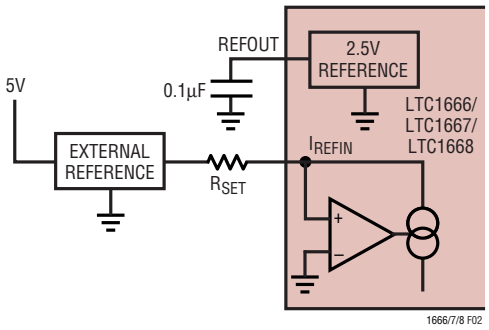

Figure 1. Using the LTC1666/LTC1667/LTC1668 with an External Reference

APPLICATIONS INFORMATION

Adjusting the Full-Scale Output

In Figure 2, a serial interfaced DAC is used to set I_{OUTFS}. The LTC1661 is a dual 10-bit V_{OUT} DAC with a buffered voltage output that swings from 0V to V_{REF}.

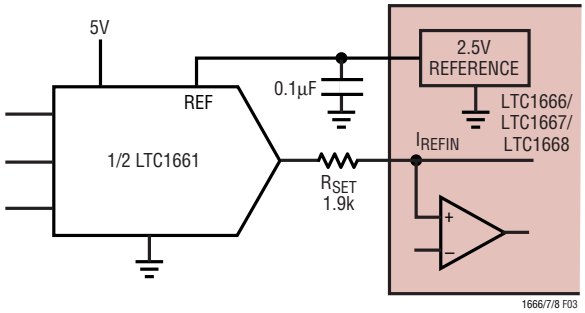

Figure 2. Adjusting the Full-Scale Current of the LTC1666/LTC1667/LTC1668 with a DAC

DAC Transfer Function

The LTC1666/LTC1667/LTC1668 use straight binary digital coding. The complementary current outputs, $I_{OUT\,A}$ and $I_{OUT\,B}$, sink current from 0 to I_{OUTFS}. For I_{OUTFS} = 10mA (nominal), $I_{OUT\,A}$ swings from 0mA when all bits are low (e.g., Code = 0) to 10mA when all bits are high (e.g., Code = 65535 for LTC1668) (decimal representation). $I_{OUT\,B}$ is complementary to $I_{OUT\,A}$. $I_{OUT\,A}$ and $I_{OUT\,B}$ are given by the following formulas:

LTC1666:

$$I_{OUT\,A} = I_{OUTFS} \bullet (\text{DAC Code}/4096) \quad (2)$$

$$I_{OUT\,B} = I_{OUTFS} \bullet (4095 - \text{DAC Code})/4096 \quad (3)$$

LTC1667:

$$I_{OUT\,A} = I_{OUTFS} \bullet (\text{DAC Code}/16384) \quad (4)$$

$$I_{OUT\,B} = I_{OUTFS} \bullet (16383 - \text{DAC Code})/16384 \quad (5)$$

LTC1668:

$$I_{OUT\,A} = I_{OUTFS} \bullet (\text{DAC Code}/65536) \quad (6)$$

$$I_{OUT\,B} = I_{OUTFS} \bullet (65535 - \text{DAC Code})/65536 \quad (7)$$

In typical applications, the LTC1666/LTC1667/LTC1668 differential output currents either drive a resistive load directly or drive an equivalent resistive load through a transformer, or as the feedback resistor of an I-to-V converter. The voltage outputs generated by the $I_{OUT\,A}$ and $I_{OUT\,B}$ output currents are then:

$$V_{OUT\,A} = I_{OUT\,A} \bullet R_{LOAD} \quad (8)$$

$$V_{OUT\,B} = I_{OUT\,B} \bullet R_{LOAD} \quad (9)$$

The differential voltage is:

$$V_{DIFF} = V_{OUT\,A} - V_{OUT\,B} = (I_{OUT\,A} - I_{OUT\,B}) \bullet (R_{LOAD}) \quad (10)$$

Substituting the values found earlier for $I_{OUT\,A}$, $I_{OUT\,B}$ and I_{OUTFS} (LTC1668):

$$V_{DIFF} = \{2 \bullet \text{DAC Code} - 65535)/65536\} \bullet 8 \bullet (R_{LOAD}/R_{SET}) \bullet (V_{REF}) \quad (11)$$

From these equations some of the advantages of differential mode operation can be seen. First, any common mode noise or error on $I_{OUT\,A}$ and $I_{OUT\,B}$ is cancelled. Second, the signal power is twice as large as in the single-ended case. Third, any errors and noise that multiply times $I_{OUT\,A}$ and $I_{OUT\,B}$, such as reference or I_{OUTFS} noise, cancel near midscale, where AC signal waveforms tend to spend the most time. Fourth, this transfer function is bipolar; e.g. the output swings positive and negative around a zero output at mid-scale input, which is more convenient for AC applications.

Note that the term (R_{LOAD}/R_{SET}) appears in both the differential and single-ended transfer functions. This means that the Gain Error of the DAC depends on the ratio of R_{LOAD} to R_{SET}, and the Gain Error tempco is affected by the temperature tracking of R_{LOAD} with R_{SET}. Note also that the absolute tempco of R_{LOAD} is very critical for DC nonlinearity. As the DAC output changes from 0mA to 10mA the R_{LOAD} resistor will heat up slightly, and even a very low tempco can produce enough INL bowing to be significant at the 16-bit level. This effect disappears with medium to high frequency AC signals due to the slow thermal time constant of the load resistor.

Analog Outputs

The LTC1666/LTC1667/LTC1668 have two complementary current outputs, $I_{OUT\,A}$ and $I_{OUT\,B}$ (see DAC Transfer Function). The output impedance of $I_{OUT\,A}$ and $I_{OUT\,B}$ ($R_{IOUT\,A}$ and $R_{IOUT\,B}$) is typically 1.1kΩ to LADCOM. (See Figure 3.)

APPLICATIONS INFORMATION

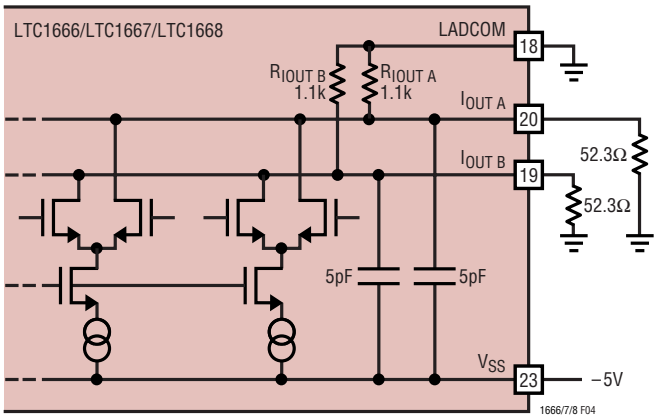

Figure 3. Equivalent Analog Output Circuit

LADCOM

The LADCOM pin is the common connection for the internal DAC attenuator ladder. It usually is tied to analog ground, but more generally it should connect to the same potential as the load resistors on $I_{OUT\ A}$ and $I_{OUT\ B}$. The LADCOM pin carries a constant current to V_{SS} of approximately 0.32 • (I_{OUTFS}), plus any current that flows from $I_{OUT\ A}$ and $I_{OUT\ B}$ through the $R_{IOUT\ A}$ and $R_{IOUT\ B}$ resistors.

Output Compliance

The specified output compliance voltage range is ±1V. The DC linearity specifications, INL and DNL, are trimmed and guaranteed on $I_{OUT\ A}$ into the virtual ground of an I-to-V converter, but are typically very good over the full output compliance range. Above 1V the output current will start to increase as the DAC current steering switch impedance decreases, degrading both DC and AC linearity. Below –1V, the DAC switches will start to approach the transition from saturation to linear region. This will degrade AC performance first, due to nonlinear capacitance and increased glitch impulse. AC distortion performance is optimal at amplitudes less than $\pm 0.5V_{P-P}$ on $I_{OUT\ A}$ and $I_{OUT\ B}$ due to nonlinear capacitance and other large-signal effects. At first glance, it may seem counter-intuitive to decrease the signal amplitude when trying to optimize SFDR. However, the error sources that affect AC performance generally behave as additive currents, so decreasing the load impedance to reduce signal voltage amplitude will reduce most spurious signals by the same amount.

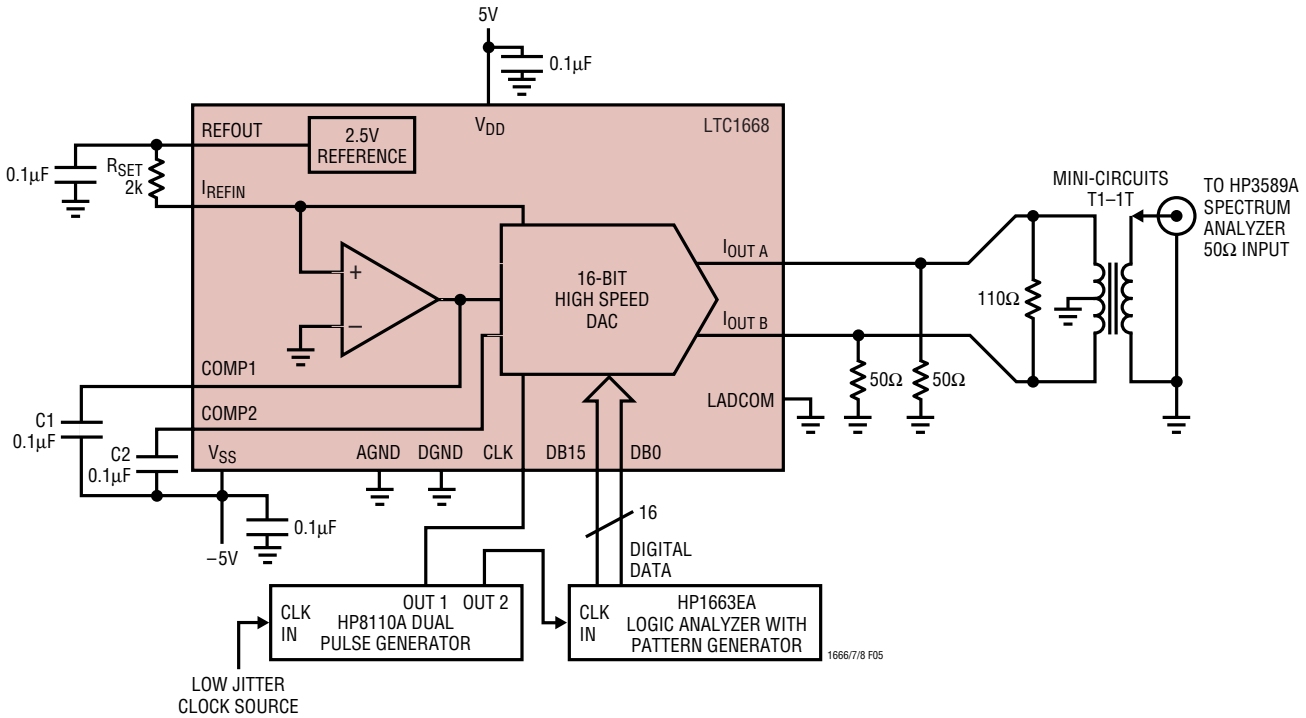

Figure 4. AC Characterization Setup (LTC1668)

APPLICATIONS INFORMATION

Operating with Reduced Output Currents

The LTC1666/LTC1667/LTC1668 are specified to operate with full-scale output current, I_{OUTFS}, from the nominal 10mA down to 1mA. This can be useful to reduce power dissipation or to adjust full-scale value. However, the DC and AC accuracy is specified only at I_{OUTFS} = 10mA, and DC and AC accuracy will fall off significantly at lower I_{OUTFS} values. At I_{OUTFS} = 1mA, the LTC1668 INL and DNL typically degrade to the 14-bit to 13-bit level, compared to 16-bit to 15-bit typical accuracy at 10mA I_{OUTFS}. Increasing I_{OUTFS} from 1mA, the accuracy improves rapidly, roughly in proportion to $1/I_{OUTFS}$. Note that the AC performance (SFDR) is affected much more by reduced I_{OUTFS} than it is by reduced digital amplitude (see Typical Performance Characteristics). Therefore it is usually better to make large gain adjustments digitally, keeping I_{OUTFS} equal to 10mA.

Output Configurations

Based on the specific application requirements, the LTC1666/LTC1667/LTC1668 allow a choice of the best of several output configurations. Voltage outputs can be generated by external load resistors, transformer coupling or with an op amp I-to-V converter. Single-ended DAC output configurations use only one of the outputs, preferably $I_{OUT\ A}$, to produce a single-ended voltage output. Differential mode configurations use the difference between $I_{OUT\ A}$ and $I_{OUT\ B}$ to generate an output voltage, V_{DIFF}, as shown in equation 11. Differential mode gives much better accuracy in most AC applications. Because the DAC chip is the point of interface between the digital input signals and the analog output, some small amount of noise coupling to $I_{OUT\ A}$ and $I_{OUT\ B}$ is unavoidable. Most of that digital noise is common mode and is canceled by the differential mode circuit. Other significant digital noise components can be modeled as V_{REF} or I_{OUTFS} noise. In single-ended mode, I_{OUTFS} noise is gone at zero scale and is fully present at full scale. In differential mode, I_{OUTFS} noise is cancelled at midscale input, corresponding to zero analog output. Many AC signals, including broadband and multitone communications signals with high peak to average ratios, stay mostly near midscale.

Differential Transformer-Coupled Outputs

Differential transformer-coupled output configurations usually give the best AC performance. An example is shown in Figure 5. The advantages of transformer coupling include excellent rejection of common mode distortion and noise over a broad frequency range and convenient differential-to-single-ended conversion with isolation or level shifting. Also, as much as twice the power can be delivered to the load, and impedance matching can be accomplished by selecting the appropriate transformer turns ratio. The center tap on the primary side of the transformer is tied to ground to provide the DC current path for $I_{OUT\ A}$ and $I_{OUT\ B}$. For low distortion, the DC average of the $I_{OUT\ A}$ and $I_{OUT\ B}$ currents must be exactly equal to avoid biasing the core. This is especially important for compact RF transformers with small cores. The circuit in Figure 5 uses a Mini-Circuits T1-1T RF transformer with a 1:1 turns ratio. The load resistance on $I_{OUT\ A}$ and $I_{OUT\ B}$ is equivalent to a single differential resistor of 50Ω, and the 1:1 turns ratio means the output impedance from the transformer is 50Ω. Note that the load resistors are optional, and they dissipate half of the output power. However, in lab environments or when driving long transmission lines it is very desirable to have a 50Ω output impedance. This could also be done with a 50Ω resistor at the transformer secondary, but putting the load resistors on $I_{OUT\ A}$ and $I_{OUT\ B}$ is preferred since it reduces the current through the transformer. At signal frequencies lower than about 1MHz, the transformer core size required to maintain low distortion gets larger, and at some lower frequencies this becomes impractical.

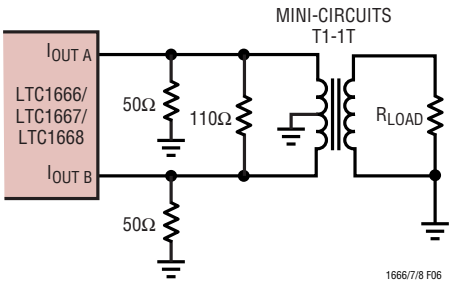

Figure 5. Differential Transformer-Coupled Outputs

APPLICATIONS INFORMATION

Resistor Loaded Outputs

A differential resistor loaded output configuration is shown in Figure 6. It is simple and economical, but it can drive only differential loads with impedance levels and amplitudes appropriate for the DAC outputs.

The recommended single-ended resistor loaded configuration is essentially the same circuit as the differential resistor loaded, case—simply use the $I_{OUT\ A}$ output, referred to ground. Rather than tying the unused $I_{OUT\ B}$ output to ground, it is preferred to load it with the equivalent R_{LOAD} of $I_{OUT\ A}$. Then $I_{OUT\ B}$ will still swing with a waveform complementary to $I_{OUT\ A}$.

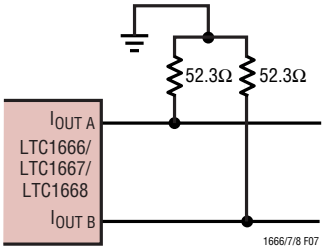

Figure 6. Differential Resistor-Loaded Output

Op Amp I to V Converter Outputs

Adding an op amp differential to single-ended converter circuit to the differential resistor loaded output gives the circuit of Figure 7.

This circuit complements the capabilities of the transformer-coupled application at lower frequencies, since available op amps can deliver good AC distortion performance at signal frequencies of a few MHz down to DC. The optional capacitor adds a single real pole of filtering, and helps reduce distortion by limiting the high frequency signal amplitude at the op amp inputs. The circuit swings ±1V around ground.

Figure 8 shows a simplified circuit for a single-ended output using I-to-V converter to produce a unipolar buffered voltage output. This configuration typically has the best DC linearity performance, but its AC distortion at higher frequencies is limited by U1's slewing capabilities.

Digital Interface

The LTC1666/LTC1667/LTC1668 have parallel inputs that are latched on the rising edge of the clock input. They accept CMOS levels from either 5V or 3.3V logic and can accept clock rates of up to 50MHz.

Referring to the Timing Diagram and Block Diagram, the data inputs go to master-slave latches that update on the rising edge of the clock. The input logic thresholds, V_{IH} = 2.4V min, V_{IL} = 0.8V max, work with 3.3V or 5V CMOS levels over temperature. The guaranteed setup time, t_{DS}, is 8ns minimum and the hold time, t_{DH}, is 4ns minimum. The minimum clock high and low times are guaranteed at 6ns and 8ns, respectively. These specifications allow the LTC1666/LTC1667/LTC1668 to be clocked at up to 50Msps minimum.

For best AC performance, the data and clock waveforms need to be clean and free of undershoot and overshoot. Clock and data interconnect lines should be twisted pair, coax or microstrip, and proper line termination is important. If the digital input signals to the DAC are considered as analog AC voltage signals, they are rich in spectral components over a broad frequency range, usually in-

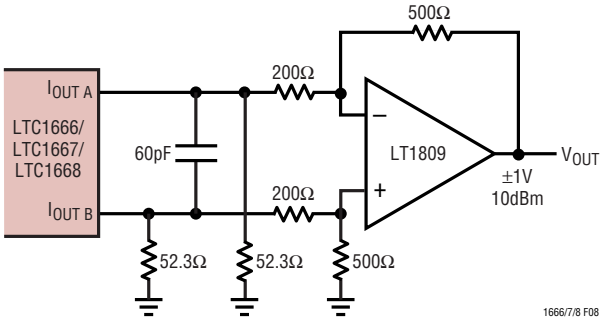

Figure 7. Differential to Single-Ended Op Amp I-V Converter

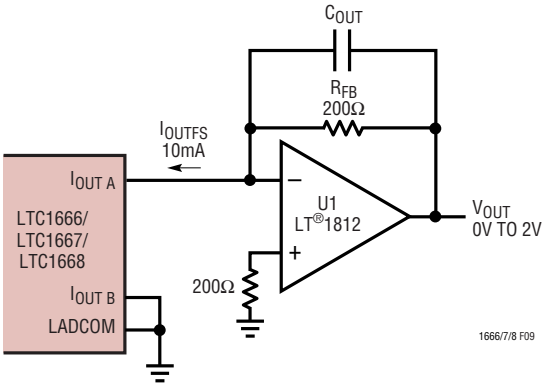

Figure 8. Single-Ended Op Amp I to V Converter

APPLICATIONS INFORMATION

cluding the output signal band of interest. Therefore, any direct coupling of the digital signals to the analog output will produce spurious tones that vary with the exact digital input pattern.

Clock jitter should be minimized to avoid degrading the noise floor of the device in AC applications, especially where high output frequencies are being generated. Any noise coupling from the digital inputs to the clock input will cause phase modulation of the clock signal and the DAC waveform, and can produce spurious tones. It is normally best to place the digital data transitions near the falling clock edge, well away from the active rising clock edge. Because the clock signal contains spectral components only at the sampling frequency and its multiples, it is usually not a source of in band spurious tones. Overall, it is better to treat the clock as you would an analog signal and route it separately from the digital data input signals. The clock trace should be routed either over the analog ground plane or over its own section of the ground plane. The clock line needs to have accurately controlled impedance and should be well terminated near the LTC1666/LTC1667/LTC1668.

Printed Circuit Board Layout Considerations—Grounding, Bypassing and Output Signal Routing

The close proximity of high frequency digital data lines and high dynamic range, wide-band analog signals makes clean printed circuit board design and layout an absolute necessity. Figures 11 to 15 are the printed circuit board layers for an AC evaluation circuit for the LTC1668. Ground planes should be split between digital and analog sections as shown. All bypass capacitors should have minimum trace length and be ceramic 0.1µF or larger with low ESR.

Bypass capacitors are required on V_{SS}, V_{DD} and REFOUT, and all connected to the AGND plane. The COMP2 pin ties to a node in the output current switching circuitry, and it requires a 0.1µF bypass capacitor. It should be bypassed to V_{SS} along with COMP1. The AGND and DGND pins should both tie directly to the AGND plane, and the tie point between the AGND and DGND planes should nominally be near the DGND pin. LADCOM should either be tied directly to the AGND plane or be bypassed to AGND. The $I_{OUT\ A}$ and $I_{OUT\ B}$ traces should be close together, short, and well matched for good AC CMRR. The transformer output ground should be capable of optionally being isolated or being tied to the AGND plane, depending on which gives better performance in the system.

Suggested Evaluation Circuit

Figure 10 is the schematic and Figures 11 to 15 are the circuit board layouts for a suggested evaluation circuit, DC245A. The circuit can be programmed with component selection and jumpers for a variety of differentially coupled transformer output and differential and single-ended resistor loaded output configurations.

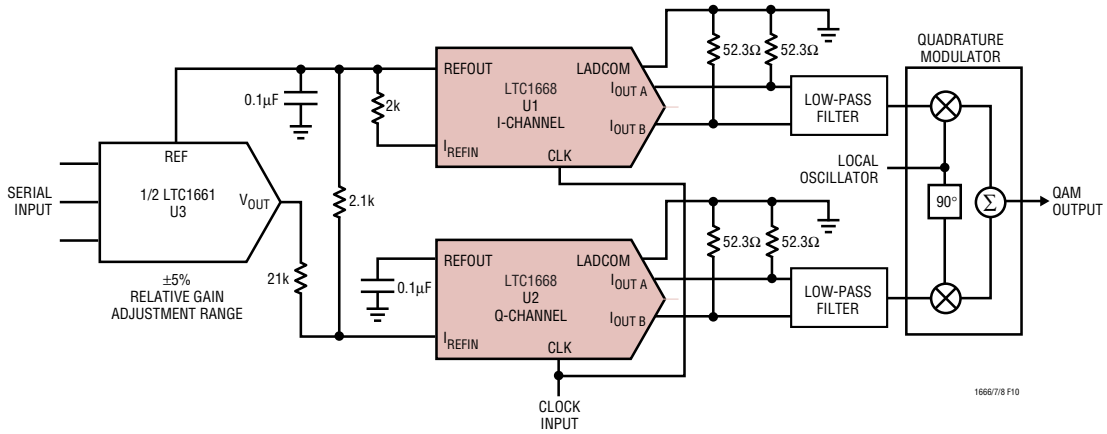

Figure 9. QAM Modulation Using LTC1668 with Digitally Controlled I vs Q Channel Gain Adjustment

APPLICATIONS INFORMATION

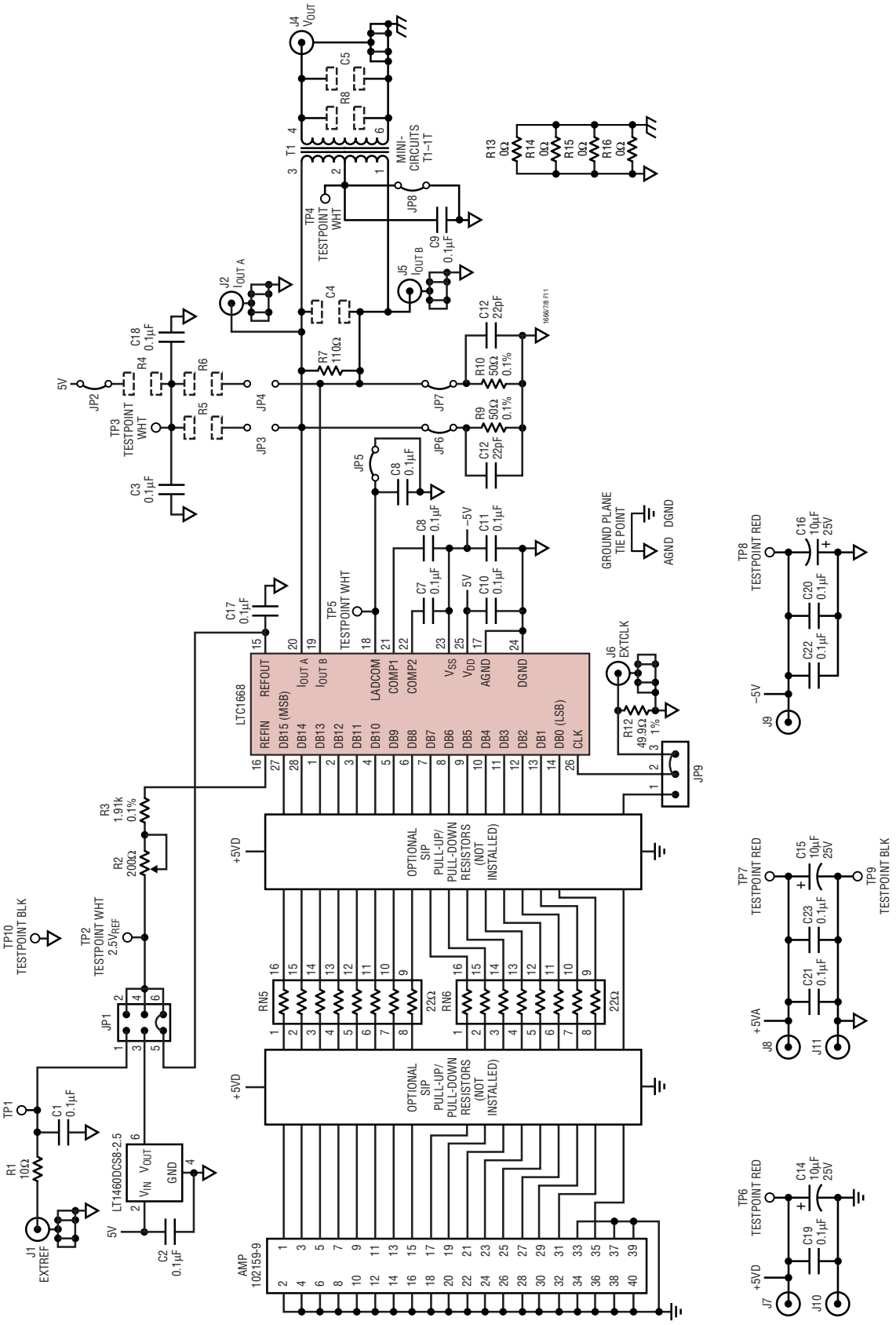

Figure 10. Suggested Evaluation Circuit

APPLICATIONS INFORMATION

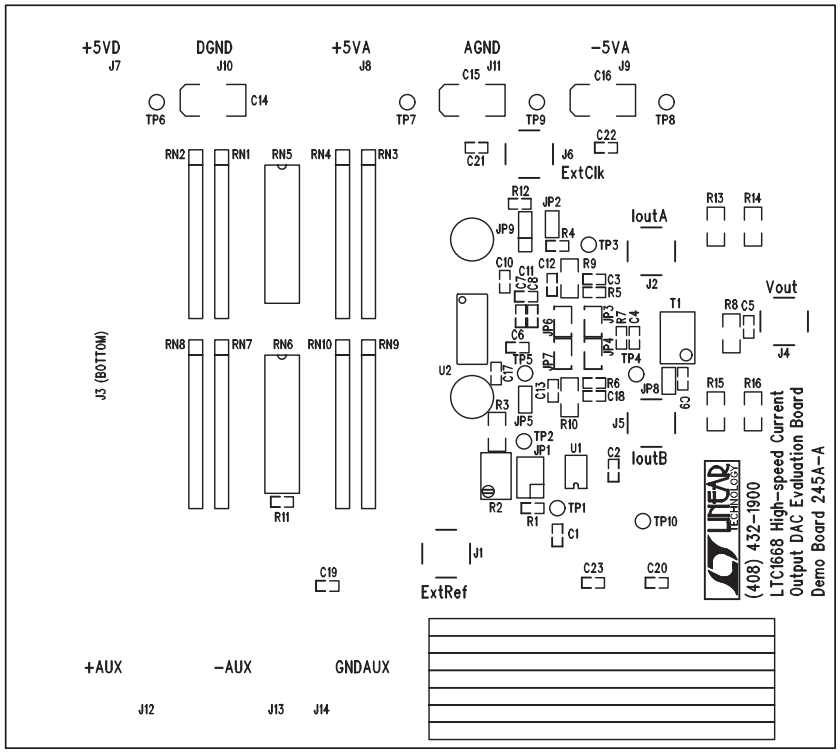

Figure 11. Suggested Evaluation Circuit Board—Silkscreen

APPLICATIONS INFORMATION

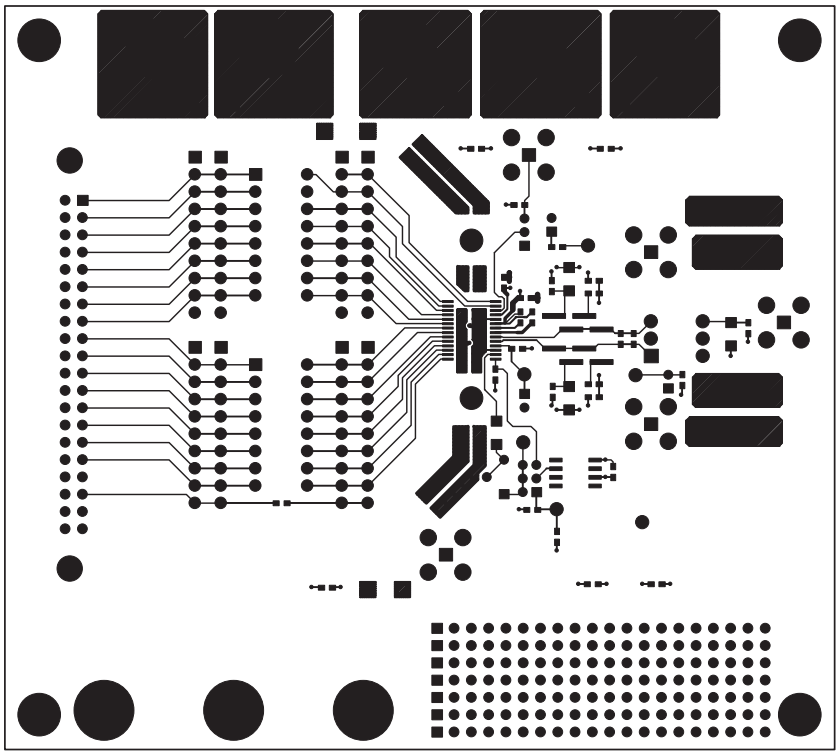

Figure 12. Suggested Evaluation Circuit Board—Component Side

APPLICATIONS INFORMATION

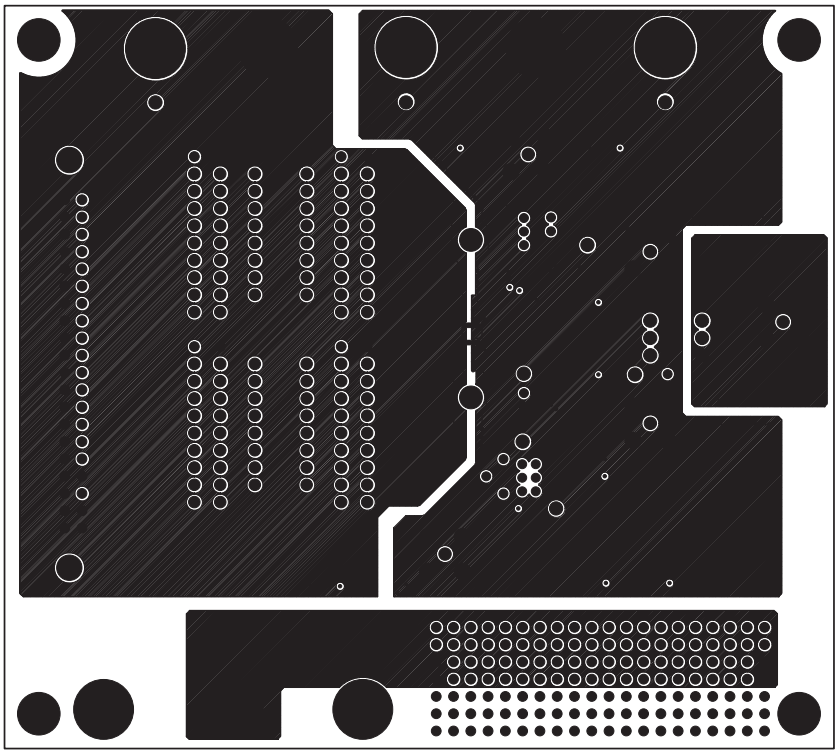

Figure 13. Suggested Evaluation Circuit Board—GND Plane

APPLICATIONS INFORMATION

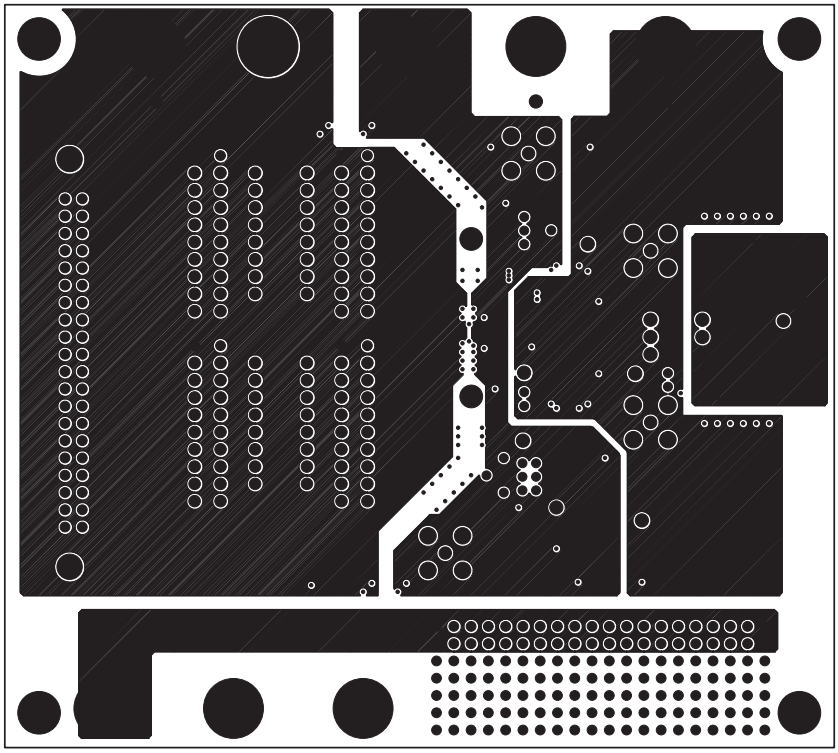

Figure 14. Suggested Evaluation Circuit Board—Power Plane

APPLICATIONS INFORMATION

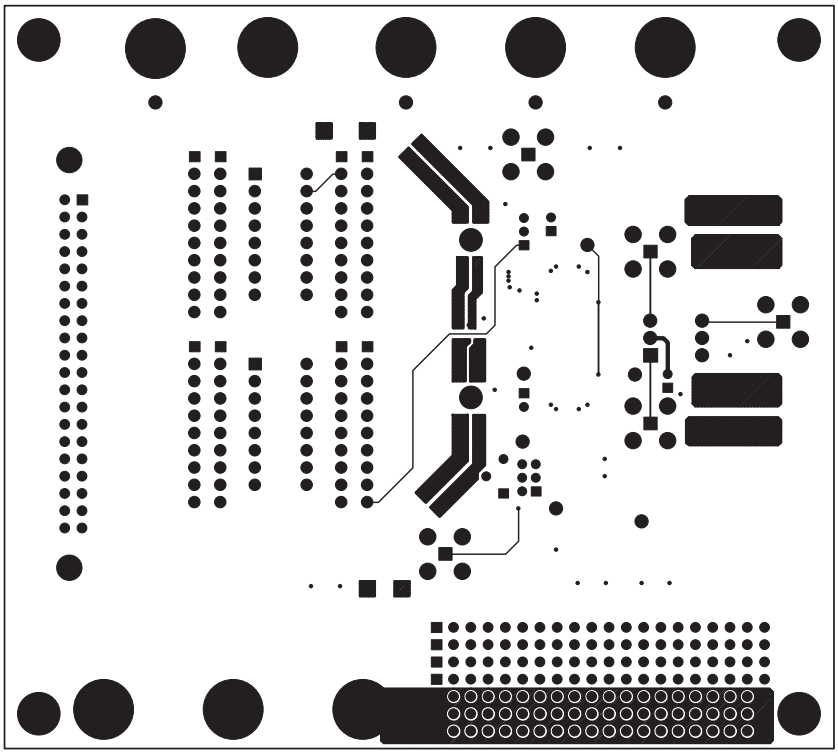

Figure 15. Suggested Evaluation Circuit Board—Solder Side

PACKAGE DESCRIPTION

G Package
28-Lead Plastic SSOP (5.3mm)
(Reference LTC DWG # 05-08-1640)

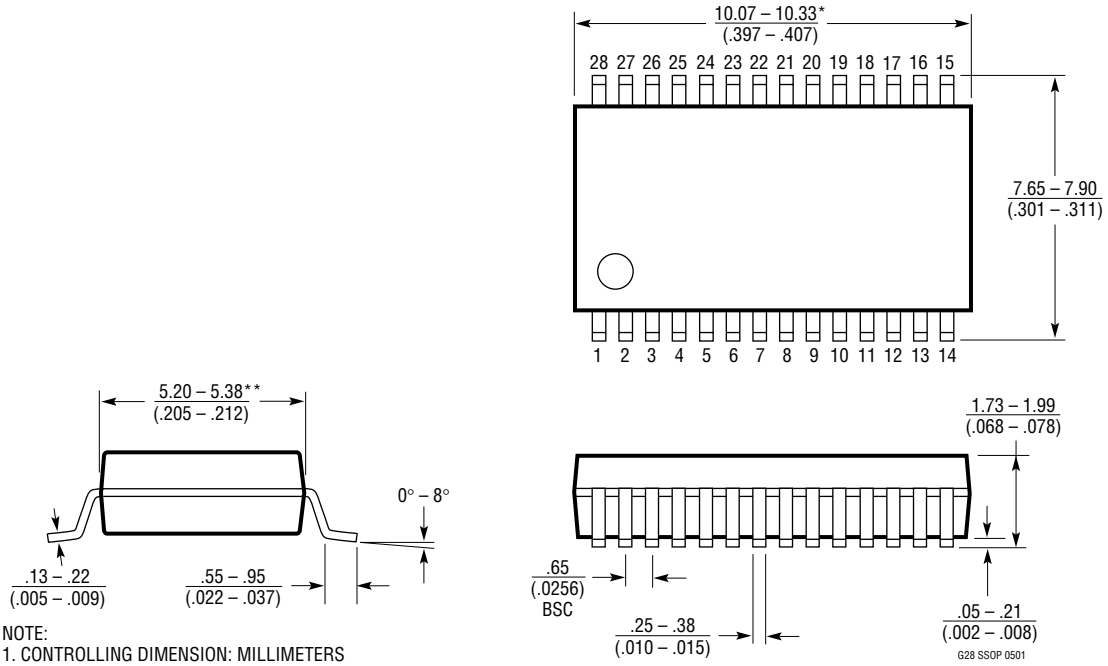

NOTE:
1. CONTROLLING DIMENSION: MILLIMETERS
2. DIMENSIONS ARE IN $\frac{\text{MILLIMETERS}}{\text{(INCHES)}}$
3. DRAWING NOT TO SCALE

*DIMENSIONS DO NOT INCLUDE MOLD FLASH. MOLD FLASH SHALL NOT EXCEED .152mm (.006") PER SIDE

**DIMENSIONS DO NOT INCLUDE INTERLEAD FLASH. INTERLEAD FLASH SHALL NOT EXCEED .254mm (.010") PER SIDE

TYPICAL APPLICATION

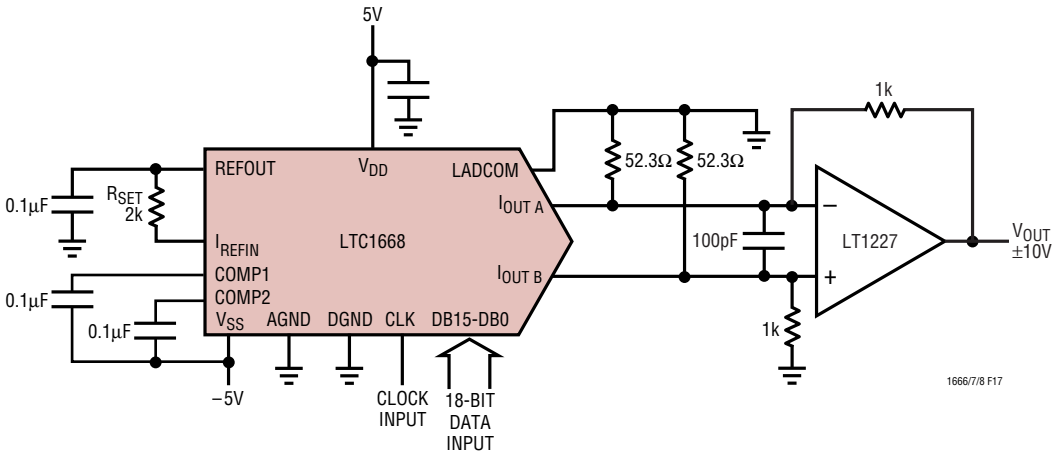

Figure 16. Arbitrary Waveform Generator Has ±10V Output Swing, 50Msps DAC Update Rate

RELATED PARTS

PART NUMBER	DESCRIPTION	COMMENTS
ADCs		
LTC1406	8-Bit, 20Msps ADC	Undersampling Capability Up to 70MHz Input
LTC1411	14-Bit, 2.5Msps ADC	
LTC1420	12-Bit, 10Msps ADC	72dB SINAD at 5MHz f_{IN}
LTC1604/LTC1608	16-Bit, 333ksps/500ksps ADCs	16-Bit, No Missing Codes, 90dB SINAD, –100dB THD
DACs		
LTC1591/LTC1597	Parallel 14/16-Bit Current Output DACs	On-Chip 4-Quadrant Resistors
LTC1595/LTC1596	Serial 16-Bit Current Output DACs	Low Glitch, ±1LSB Maximum INL, DNL
LTC1650	Serial 16-Bit Voltage Output DAC	Low Power, Deglitched, 4-Quadrant Multiplying V_{OUT} DAC, ±4.5V Output Swing, 4µs Settling Time
LTC1655(L)	Single 16-Bit V_{OUT} DAC with Serial Interface in SO-8	5V (3V) Single Supply, Rail-to-Rail Output Swing
LTC1657(L)	16-Bit Parallel Voltage Output DAC	5V (3V) Low Power, 16-Bit Monotonic Over Temp., Multiplying Capability
AMPLIFIERs		
LT1809/LT1810	Single/Dual 180MHz, 350V/µs Op Amp	Rail-to-Rail Input and Output, Low Distortion
LT1812/LT1813	Single/Dual 100MHz, 750V/µs Op Amp	3.6mA Supply Current, 8nV/$\sqrt{Hz}$ Input Noise Voltage