查询L78M06AC供应商 捷多邦，专业PCB打样工厂，24小时加急出货

L78M00AB/AC SERIES

PRECISION 500mA REGULATORS

- OUTPUT CURRENT TO 0.5A
- OUTPUT VOLTAGES OF 5; 6; 8; 9; 10; 12; 15; 18; 20; 24V
- THERMAL OVERLOAD PROTECTION
- SHORT CIRCUIT PROTECTION
- OUTPUT TRANSITION SOA PROTECTION
- ±2% OUTPUT VOLTAGE TOLERANCE
- GUARANTEED IN EXTENDED TEMPERATURE RANGE

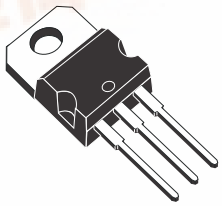

TO-220

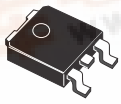

DPAK

DESCRIPTION

The L78M00AB series of three-terminal positive regulators is available in TO-220 and DPAK packages and with several fixed output voltages, making it useful in a wide range of applications. These regulators can provide local on-card regulation eliminating the distribution problems associated with single point regulation. Each type employs internal current limiting, thermal shut-down and safe area protection, making it essentially indestructible. If adequate heat sinking is provided, they can deliver over 0.5A output current. Although designed primarily as fixed voltage regulators, these devices can be used with external components to obtain adjustable voltage and currents.

SCHEMATIC DIAGRAM

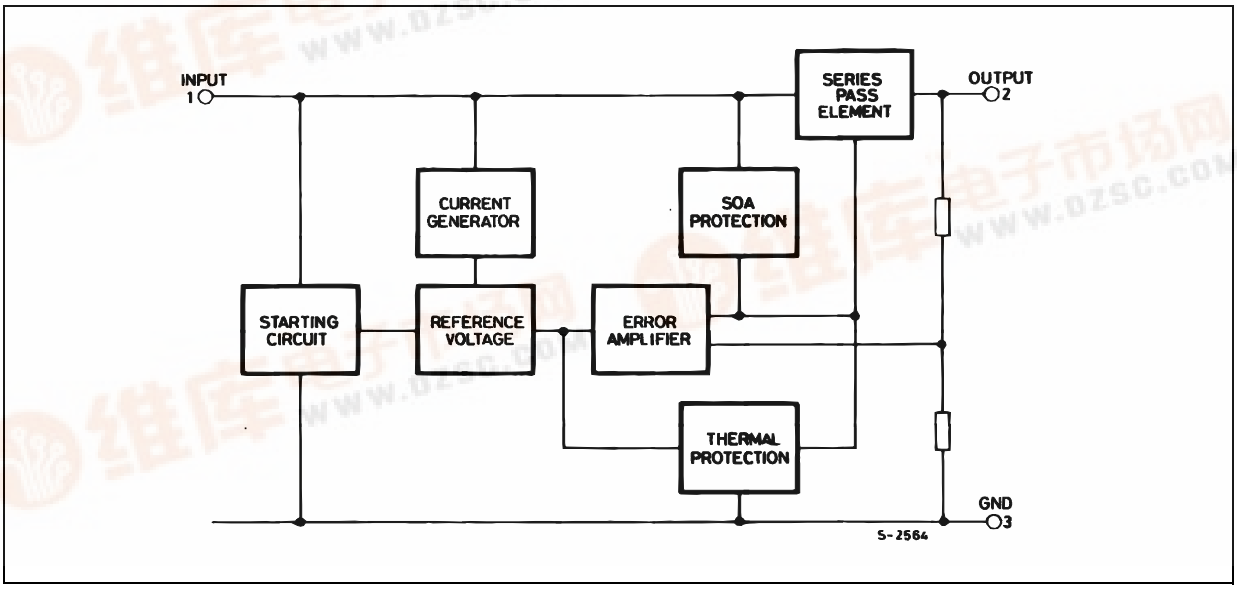

找PDF 维库一下 pdf.dzsc.com

ABSOLUTE MAXIMUM RATINGS

Symbol	Parameter[2]		Value	Unit
V_I	DC Input Voltage	for V_O = 5 to 18V	35	V
		for V_O = 20, 24V	40	
I_O	Output Current		Internally Limited	
P_{tot}	Power Dissipation		Internally Limited	
T_{stg}	Storage Temperature Range		-65 to +150	°C
T_{op}	Operating Junction Temperature Range	for L78M00AC	0 to 125	°C
		for L78M00AB	-40 to 125	

Absolute Maximum Ratings are those values beyond which damage to the device may occur. Functional operation under these condition is not implied.

THERMAL DATA

Symbol	Parameter		TO-220	DPAK	Unit
$R_{thj\text{-}case}$	Thermal Resistance Junction-case	MAX	3	8	°C/W
$R_{thj\text{-}amb}$	Thermal Resistance Junction-ambient	MAX	50	100	°C/W

SHEMATIC DIAGRAM

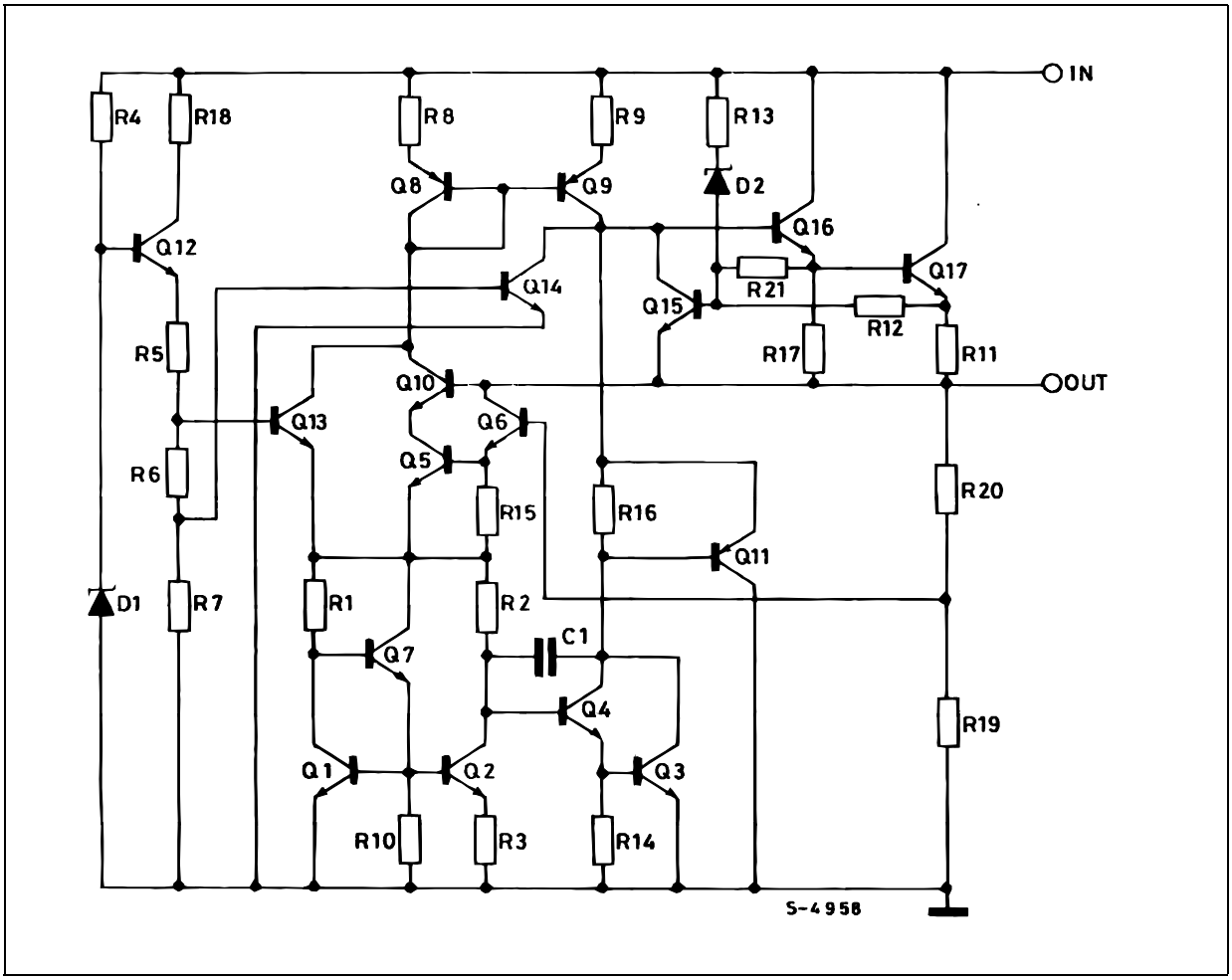

CONNECTION DIAGRAM (top view)

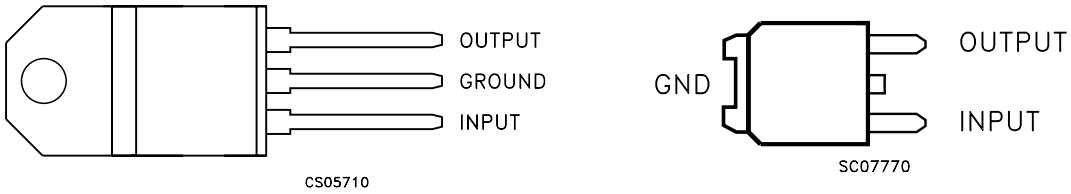

TO-220 **DPAK**

ORDERING CODES

TYPE	TO-220	DPAK (*)	OUTPUT VOLTAGE
L78M05AB	L78M05ABV	L78M05ABDT	5 V
L78M05AC		L78M05ACDT	5 V
L78M06AB	L78M06ABV	L78M06ABDT	6 V
L78M06AC		L78M06ACDT	6 V
L78M08AB	L78M08ABV	L78M08ABDT	8 V
L78M08AC		L78M08ACDT	8 V
L78M09AB	L78M09ABV	L78M09ABDT	9 V
L78M09AC		L78M09ACDT	9 V
L78M10AB	L78M10ABV	L78M10ABDT	10 V
L78M10AC		L78M10ACDT	10 V
L78M12AB	L78M12ABV	L78M12ABDT	12 V
L78M12AC		L78M12ACDT	12 V
L78M15AB	L78M15ABV	L78M15ABDT	15 V
L78M15AC		L78M15ACDT	15 V
L78M18AB	L78M18ABV	L78M18ABDT	18 V
L78M18AC		L78M18ACDT	18 V
L78M20AB	L78M20ABV	L78M20ABDT	20 V
L78M20AC		L78M20ACDT	20 V
L78M24AB	L78M24ABV	L78M24ABDT	24 V
L78M24AC		L78M24ACDT	24 V

(*) Available in Tape & Reel with the suffix "-TR".

APPLICATION CIRCUITS

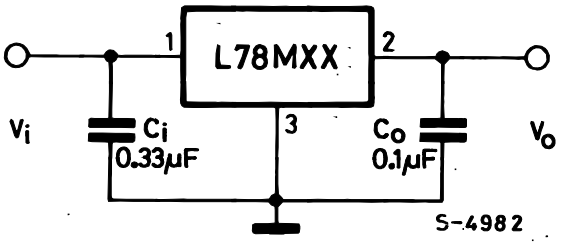

TEST CIRCUITS

Figure 1 : DC Parameter

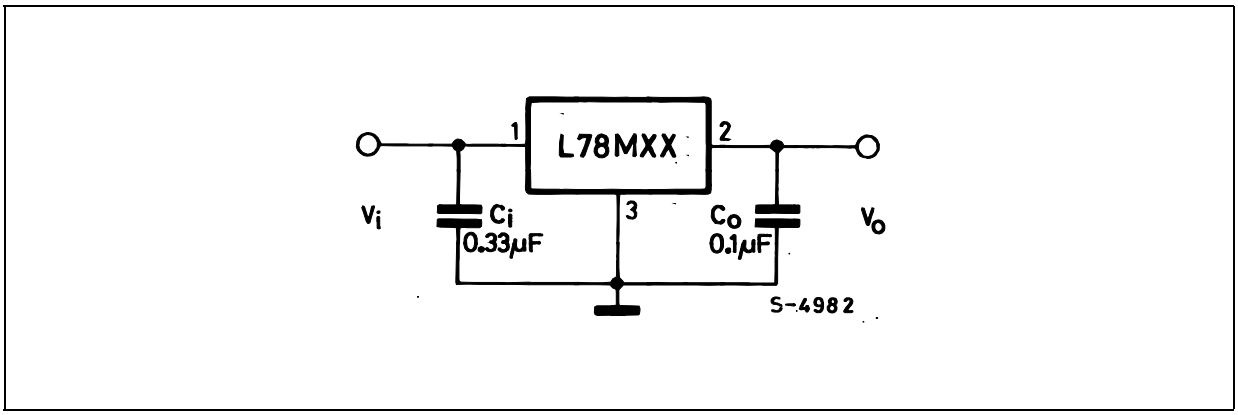

Figure 2 : Load Regulation

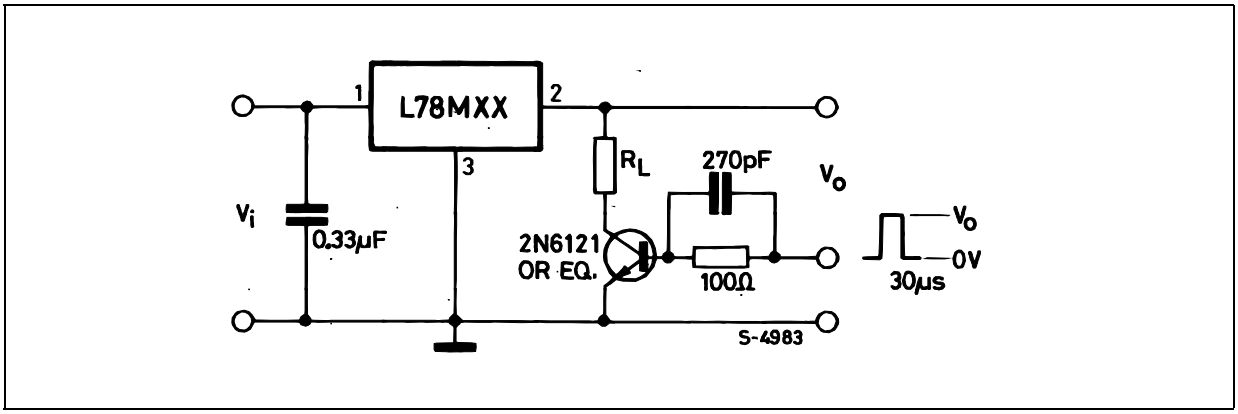

Figure 3 : Ripple Rejection

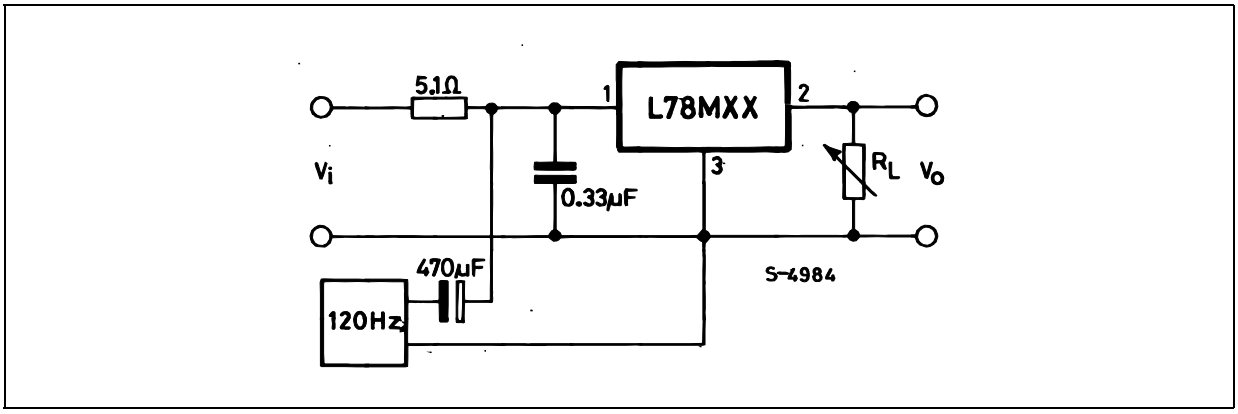

ELECTRICAL CHARACTERISTICS OF L78M05XX (refer to the test circuits, V_I = 10V, I_O = 350 mA, C_I = 0.33 µF, C_O = 0.1 µF, T_J = -40 to 125°C (AB), T_J = 0 to 125°C (AC) unless otherwise specified)

Symbol	Parameter	Test Conditions	Min.	Typ.	Max.	Unit
V_O	Output Voltage	T_J = 25°C	4.9	5	5.1	V
V_O	Output Voltage	I_O = 5 to 350 mA V_I = 7 to 20 V	4.8	5	5.2	V
ΔV_O	Line Regulation	V_I = 7 to 25 V, I_O = 200 mA T_J = 25°C			100	mV
		V_I = 8 to 25 V, I_O = 200 mA T_J = 25°C			50	
ΔV_O	Load Regulation	I_O = 5 to 500 mA T_J = 25°C			100	mV
		I_O = 5 to 200 mA T_J = 25°C			50	
I_d	Quiescent Current	T_J = 25°C			6	mA
ΔI_d	Quiescent Current Change	I_O = 5 to 350 mA			0.5	mA
		I_O = 200 mA V_I = 8 to 25 V			0.8	
$\Delta V_O/\Delta T$	Output Voltage Drift	I_O = 5 mA		-0.5		mV/°C
SVR	Supply Voltage Rejection	V_I = 8 to 18 V f = 120Hz I_O = 300mA T_J = 25°C	62			dB
eN	Output Noise Voltage	B =10Hz to 100KHz T_J = 25°C		40		µV
V_d	Dropout Voltage	T_J = 25°C		2		V
I_{sc}	Short Circuit Current	T_J = 25°C V_I = 35 V		300		mA
I_{scp}	Short Circuit Peak Current	T_J = 25°C		700		mA

ELECTRICAL CHARACTERISTICS OF L78M06XX (refer to the test circuits, V_I = 11V, I_O = 350 mA, C_I = 0.33 µF, C_O = 0.1 µF, T_J = -40 to 125°C (AB), T_J = 0 to 125°C (AC) unless otherwise specified)

Symbol	Parameter	Test Conditions	Min.	Typ.	Max.	Unit
V_O	Output Voltage	T_J = 25°C	5.88	6	6.12	V
V_O	Output Voltage	I_O = 5 to 350 mA V_I = 8 to 21 V	5.75	6	6.3	V
ΔV_O	Line Regulation	V_I = 8 to 25 V, I_O = 200 mA T_J = 25°C			100	mV
		V_I = 9 to 25 V, I_O = 200 mA T_J = 25°C			30	
ΔV_O	Load Regulation	I_O = 5 to 500 mA T_J = 25°C			120	mV
		I_O = 5 to 200 mA T_J = 25°C			60	
I_d	Quiescent Current	T_J = 25°C			6	mA
ΔI_d	Quiescent Current Change	I_O = 5 to 350 mA			0.5	mA
		I_O = 200 mA V_I = 9 to 25 V			0.8	
$\Delta V_O/\Delta T$	Output Voltage Drift	I_O = 5 mA		-0.5		mV/°C
SVR	Supply Voltage Rejection	V_I = 9 to 19 V f = 120Hz I_O = 300mA T_J = 25°C	59			dB
eN	Output Noise Voltage	B =10Hz to 100KHz		45		µV
V_d	Dropout Voltage	T_J = 25°C		2		V
I_{sc}	Short Circuit Current	T_J = 25°C V_I = 35 V		270		mA
I_{scp}	Short Circuit Peak Current	T_J = 25°C		700		mA

ELECTRICAL CHARACTERISTICS OF L78M08XX (refer to the test circuits, V_I = 14V, I_O = 350 mA, C_I = 0.33 µF, C_O = 0.1 µF, T_J = -40 to 125°C (AB), T_J = 0 to 125°C (AC) unless otherwise specified)

Symbol	Parameter	Test Conditions	Min.	Typ.	Max.	Unit
V_O	Output Voltage	T_J = 25°C	7.84	8	8.16	V
V_O	Output Voltage	I_O = 5 to 350 mA V_I = 10.5 to 23 V	7.7	8	8.3	V
ΔV_O	Line Regulation	V_I = 10.5 to 25 V, I_O = 200 mA T_J = 25°C			100	mV
		V_I = 11 to 25 V, I_O = 200 mA T_J = 25°C			30	
ΔV_O	Load Regulation	I_O = 5 to 500 mA T_J = 25°C			160	mV
		I_O = 5 to 200 mA T_J = 25°C			80	
I_d	Quiescent Current	T_J = 25°C			6	mA
ΔI_d	Quiescent Current Change	I_O = 5 to 350 mA			0.5	mA
		I_O = 200 mA V_I = 10.5 to 25 V			0.8	
$\Delta V_O/\Delta T$	Output Voltage Drift	I_O = 5 mA		-0.5		mV/°C
SVR	Supply Voltage Rejection	V_I = 11.5 to 21.5 V f = 120Hz I_O = 300mA T_J = 25°C	56			dB
eN	Output Noise Voltage	B =10Hz to 100KHz T_J = 25°C		52		µV
V_d	Dropout Voltage	T_J = 25°C		2		V
I_{sc}	Short Circuit Current	T_J = 25°C V_I = 35 V		250		mA
I_{scp}	Short Circuit Peak Current	T_J = 25°C		700		mA

ELECTRICAL CHARACTERISTICS OF L78M09XX (refer to the test circuits, V_I = 14V, I_O = 350 mA, C_I = 0.33 µF, C_O = 0.1 µF, T_J = -40 to 125°C (AB), T_J = 0 to 125°C (AC) unless otherwise specified)

Symbol	Parameter	Test Conditions	Min.	Typ.	Max.	Unit
V_O	Output Voltage	T_J = 25°C	8.82	9	9.18	V
V_O	Output Voltage	I_O = 5 to 350 mA V_I = 11.5 to 24 V	8.64	9	9.36	V
ΔV_O	Line Regulation	V_I = 11.5 to 25 V, I_O = 200 mA T_J = 25°C			100	mV
		V_I = 12 to 25 V, I_O = 200 mA T_J = 25°C			30	
ΔV_O	Load Regulation	I_O = 5 to 500 mA T_J = 25°C			180	mV
		I_O = 5 to 200 mA T_J = 25°C			90	
I_d	Quiescent Current	T_J = 25°C			6	mA
ΔI_d	Quiescent Current Change	I_O = 5 to 350 mA			0.5	mA
		I_O = 200 mA V_I = 11.5 to 25 V			0.8	
$\Delta V_O/\Delta T$	Output Voltage Drift	I_O = 5 mA		-0.5		mV/°C
SVR	Supply Voltage Rejection	V_I = 12.5 to 23 V f = 120Hz I_O = 300mA T_J = 25°C	56			dB
eN	Output Noise Voltage	B =10Hz to 100KHz T_J = 25°C		52		µV
V_d	Dropout Voltage	T_J = 25°C		2		V
I_{sc}	Short Circuit Current	T_J = 25°C V_I = 35 V		250		mA
I_{scp}	Short Circuit Peak Current	T_J = 25°C		700		mA

ELECTRICAL CHARACTERISTICS OF L78M10XX (refer to the test circuits, V_I = 16V, I_O = 350 mA, C_I = 0.33 µF, C_O = 0.1 µF, T_J = -40 to 125°C (AB), T_J = 0 to 125°C (AC) unless otherwise specified)

Symbol	Parameter	Test Conditions	Min.	Typ.	Max.	Unit
V_O	Output Voltage	T_J = 25°C	9.8	10	10.2	V
V_O	Output Voltage	I_O = 5 to 350 mA V_I = 12.5 to 25 V	9.6	10	10.4	V
ΔV_O	Line Regulation	V_I = 12.5 to 30 V, I_O = 200 mA T_J = 25°C			100	mV
		V_I = 13 to 30 V, I_O = 200 mA T_J = 25°C			30	
ΔV_O	Load Regulation	I_O = 5 to 500 mA T_J = 25°C			200	mV
		I_O = 5 to 200 mA T_J = 25°C			100	
I_d	Quiescent Current	T_J = 25°C			6	mA
ΔI_d	Quiescent Current Change	I_O = 5 to 350 mA			0.5	mA
		I_O = 200 mA V_I = 12.5 to 30 V			0.8	
$\Delta V_O/\Delta T$	Output Voltage Drift	I_O = 5mA		-0.5		mV/°C
SVR	Supply Voltage Rejection	V_I = 13.5 to 24 V f = 120Hz I_O = 300mA T_J = 25°C	56			dB
eN	Output Noise Voltage	B =10Hz to 100KHz T_J = 25°C		64		µV
V_d	Dropout Voltage	T_J = 25°C		2		V
I_{sc}	Short Circuit Current	T_J = 25°C V_I = 35 V		245		mA
I_{scp}	Short Circuit Peak Current	T_J = 25°C		700		mA

ELECTRICAL CHARACTERISTICS OF L78M12XX (refer to the test circuits, V_I = 19V, I_O = 350 mA, C_I = 0.33 µF, C_O = 0.1 µF, T_J = -40 to 125°C (AB), T_J = 0 to 125°C (AC) unless otherwise specified)

Symbol	Parameter	Test Conditions	Min.	Typ.	Max.	Unit
V_O	Output Voltage	T_J = 25°C	11.75	12	12.25	V
V_O	Output Voltage	I_O = 5 to 350 mA V_I = 14.5 to 27 V	11.5	12	12.5	V
ΔV_O	Line Regulation	V_I = 14.5 to 30 V, I_O = 200 mA T_J = 25°C			100	mV
		V_I = 16 to 30 V, I_O = 200 mA T_J = 25°C			30	
ΔV_O	Load Regulation	I_O = 5 to 500 mA T_J = 25°C			240	mV
		I_O = 5 to 200 mA T_J = 25°C			120	
I_d	Quiescent Current	T_J = 25°C			6	mA
ΔI_d	Quiescent Current Change	I_O = 5 to 350 mA			0.5	mA
		I_O = 200 mA V_I = 14.5 to 30 V			0.8	
$\Delta V_O/\Delta T$	Output Voltage Drift	I_O = 5 mA		-1		mV/°C
SVR	Supply Voltage Rejection	V_I = 15 to 25 V f = 120Hz I_O = 300mA T_J = 25°C	55			dB
eN	Output Noise Voltage	B =10Hz to 100KHz T_J = 25°C		75		µV
V_d	Dropout Voltage	T_J = 25°C		2		V
I_{sc}	Short Circuit Current	T_J = 25°C V_I = 35 V		240		mA
I_{scp}	Short Circuit Peak Current	T_J = 25°C		700		mA

ELECTRICAL CHARACTERISTICS OF L78M15XX (refer to the test circuits, V_I = 23V, I_O = 350 mA, C_I = 0.33 µF, C_O = 0.1 µF, T_J = -40 to 125°C (AB), T_J = 0 to 125°C (AC) unless otherwise specified)

Symbol	Parameter	Test Conditions	Min.	Typ.	Max.	Unit
V_O	Output Voltage	T_J = 25°C	14.7	15	15.3	V
V_O	Output Voltage	I_O = 5 to 350 mA V_I = 17.5 to 30 V	14.4	15	15.6	V
ΔV_O	Line Regulation	V_I = 17.5 to 30 V, I_O = 200 mA T_J = 25°C			100	mV
		V_I = 20 to 30 V, I_O = 200 mA T_J = 25°C			30	
ΔV_O	Load Regulation	I_O = 5 to 500 mA T_J = 25°C			300	mV
		I_O = 5 to 200 mA T_J = 25°C			150	
I_d	Quiescent Current	T_J = 25°C			6	mA
ΔI_d	Quiescent Current Change	I_O = 5 to 350 mA			0.5	mA
		I_O = 200 mA V_I = 17.5 to 30 V			0.8	
$\Delta V_O/\Delta T$	Output Voltage Drift	I_O = 5 mA		-1		mV/°C
SVR	Supply Voltage Rejection	V_I = 22 to 32 V f = 120Hz I_O = 300mA T_J = 25°C	54			dB
eN	Output Noise Voltage	B =10Hz to 100KHz T_J = 25°C		90		µV
V_d	Dropout Voltage	T_J = 25°C		2		V
I_{sc}	Short Circuit Current	T_J = 25°C V_I = 35 V		240		mA
I_{scp}	Short Circuit Peak Current	T_J = 25°C		700		mA

ELECTRICAL CHARACTERISTICS OF L78M18XX (refer to the test circuits, V_I = 26V, I_O = 350 mA, C_I = 0.33 µF, C_O = 0.1 µF, T_J = -40 to 125°C (AB), T_J = 0 to 125°C (AC) unless otherwise specified)

Symbol	Parameter	Test Conditions	Min.	Typ.	Max.	Unit
V_O	Output Voltage	T_J = 25°C	17.64	18	18.36	V
V_O	Output Voltage	I_O = 5 to 350 mA V_I = 20.5 to 33 V	17.3	18	18.7	V
ΔV_O	Line Regulation	V_I = 21 to 33 V, I_O = 200 mA T_J = 25°C			100	mV
		V_I = 24 to 33 V, I_O = 200 mA T_J = 25°C			30	
ΔV_O	Load Regulation	I_O = 5 to 500 mA T_J = 25°C			360	mV
		I_O = 5 to 200 mA T_J = 25°C			180	
I_d	Quiescent Current	T_J = 25°C			6	mA
ΔI_d	Quiescent Current Change	I_O = 5 to 350 mA			0.5	mA
		I_O = 200 mA V_I = 21 to 33 V			0.8	
$\Delta V_O/\Delta T$	Output Voltage Drift	I_O = 5 mA		-1.1		mV/°C
SVR	Supply Voltage Rejection	V_I = 22 to 32 V f = 120Hz I_O = 300mA T_J = 25°C	53			dB
eN	Output Noise Voltage	B =10Hz to 100KHz T_J = 25°C		100		µV
V_d	Dropout Voltage	T_J = 25°C		2		V
I_{sc}	Short Circuit Current	T_J = 25°C V_I = 35 V		240		mA
I_{scp}	Short Circuit Peak Current	T_J = 25°C		700		mA

ELECTRICAL CHARACTERISTICS OF L78M20XX (refer to the test circuits, V_I = 29V, I_O = 350 mA, C_I = 0.33 µF, C_O = 0.1 µF, T_J = -40 to 125°C (AB), T_J = 0 to 125°C (AC) unless otherwise specified)

Symbol	Parameter	Test Conditions	Min.	Typ.	Max.	Unit
V_O	Output Voltage	T_J = 25°C	19.6	20	20.4	V
V_O	Output Voltage	I_O = 5 to 350 mA V_I = 23 to 35 V	19.2	20	20.8	V
ΔV_O	Line Regulation	V_I = 23 to 35 V, I_O = 200 mA T_J = 25°C			100	mV
		V_I = 24 to 35 V, I_O = 200 mA T_J = 25°C			30	
ΔV_O	Load Regulation	I_O = 5 to 500 mA T_J = 25°C			400	mV
		I_O = 5 to 200 mA T_J = 25°C			200	
I_d	Quiescent Current	T_J = 25°C			6	mA
ΔI_d	Quiescent Current Change	I_O = 5 to 350 mA			0.5	mA
		I_O = 200 mA V_I = 23 to 35 V			0.8	
$\Delta V_O/\Delta T$	Output Voltage Drift	I_O = 5 mA		-1.1		mV/°C
SVR	Supply Voltage Rejection	V_I = 24 to 34 V f = 120Hz I_O = 300mA T_J = 25°C	53			dB
eN	Output Noise Voltage	B =10Hz to 100KHz T_J = 25°C		110		µV
V_d	Dropout Voltage	T_J = 25°C		2		V
I_{sc}	Short Circuit Current	T_J = 25°C V_I = 35 V		240		mA
I_{scp}	Short Circuit Peak Current	T_J = 25°C		700		mA

ELECTRICAL CHARACTERISTICS OF L78M24XX (refer to the test circuits, V_I = 33V, I_O = 350 mA, C_I = 0.33 µF, C_O = 0.1 µF, T_J = -40 to 125°C (AB), T_J = 0 to 125°C (AC) unless otherwise specified)

Symbol	Parameter	Test Conditions	Min.	Typ.	Max.	Unit
V_O	Output Voltage	T_J = 25°C	23.5	24	24.5	V
V_O	Output Voltage	I_O = 5 to 350 mA V_I = 27 to 38 V	23	24	25	V
ΔV_O	Line Regulation	V_I = 27 to 38 V, I_O = 200 mA T_J = 25°C			100	mV
		V_I = 28 to 38 V, I_O = 200 mA T_J = 25°C			30	
ΔV_O	Load Regulation	I_O = 5 to 500 mA T_J = 25°C			480	mV
		I_O = 5 to 200 mA T_J = 25°C			240	
I_d	Quiescent Current	T_J = 25°C			6	mA
ΔI_d	Quiescent Current Change	I_O = 5 to 350 mA			0.5	mA
		I_O = 200 mA V_I = 27 to 38 V			0.8	
$\Delta V_O/\Delta T$	Output Voltage Drift	I_O = 5 mA		-1.2		mV/°C
SVR	Supply Voltage Rejection	V_I = 28 to 38 V f = 120Hz I_O = 300mA T_J = 25°C	50			dB
eN	Output Noise Voltage	B =10Hz to 100KHz T_J = 25°C		170		µV
V_d	Dropout Voltage	T_J = 25°C		2		V
I_{sc}	Short Circuit Current	T_J = 25°C V_I = 35 V		240		mA
I_{scp}	Short Circuit Peak Current	T_J = 25°C		700		mA

Figure 4 : Dropout Voltage vs Junction Temperature

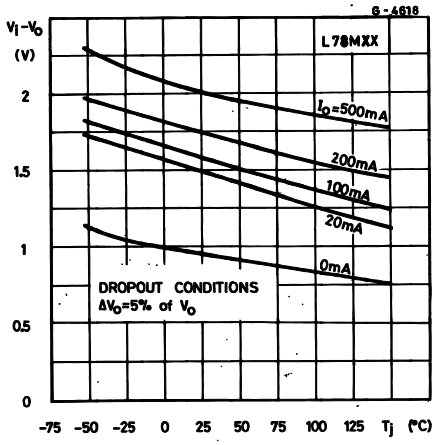

Figure 5 : Dropout Characteristics

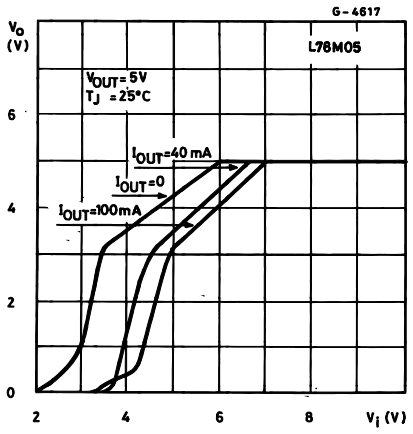

Figure 6 : Peak Output Current vs Input-Output Differential Voltage

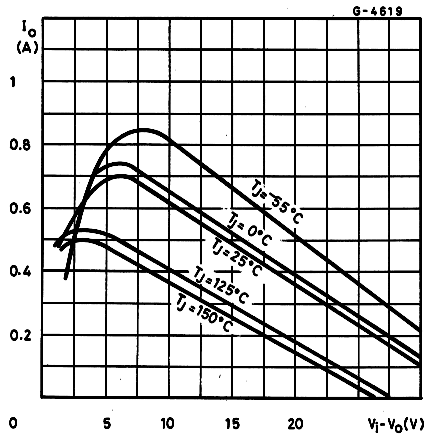

Figure 7 : Output Voltage vs Junction Temperature

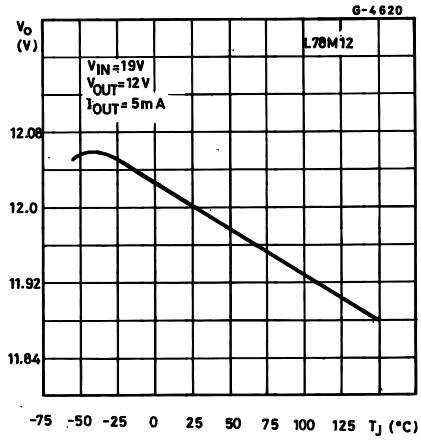

Figure 8 : Supply Voltage Rejection vs Frequency

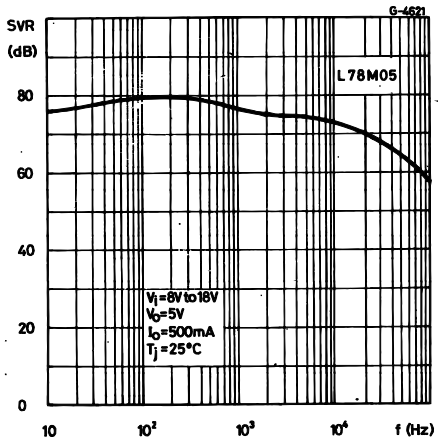

Figure 9 : Quiescent Current vs Junction Temperature

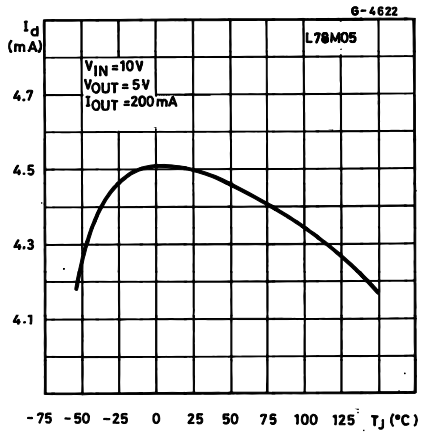

Figure 10 : Load Transient Response

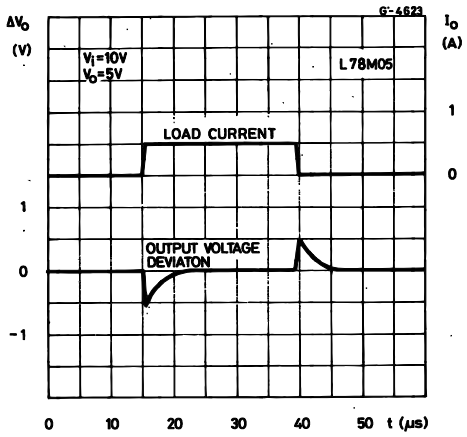

Figure 12 : Quiescent Current vs Input Voltage

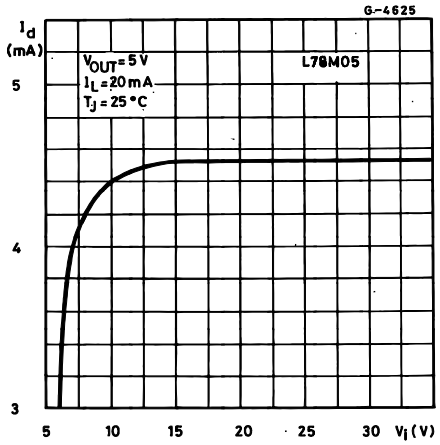

Figure 11 : Line Transient Response

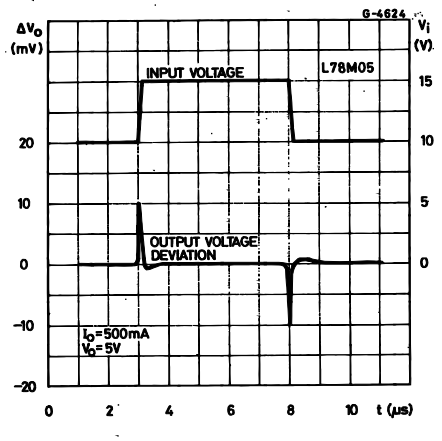

APPLICATIONS INFORMATION

DESIGN CONSIDERATIONS

The L78M00AB Series of fixed voltage regulators are designed with Thermal Overload Protection that shuts down the circuit when subjected to an excessive power overload condition, Internal Short-Circuit Protection that limits the maximum current the circuit will pass, and Output Transistor Safe-Area Compensation that reduces the output short-circuit as the voltage across the pass transistor is increased. In many low current applications, compensation capacitors are not required. However, it is recommended that the regulator input be bypassed with a capacitor if the regulator is connected to the power supply filter with long wire lengths, or if the output load capacitance is large. An input bypass capacitor should be selected to provide good high-frequency characteristics to insure stable operation under all load conditions. A 0.33µF or larger tantalum, mylar, or other capacitor having low internal impedance at high frequencies should be chosen. The bypass capacitor should be mounted with the shortest possible leads directly across the regulators input terminals. Normally good construction techniques should be used to minimize ground loops and lead resistance drops since the regulator has no external sense lead.

Figure 13 : Current Regulator

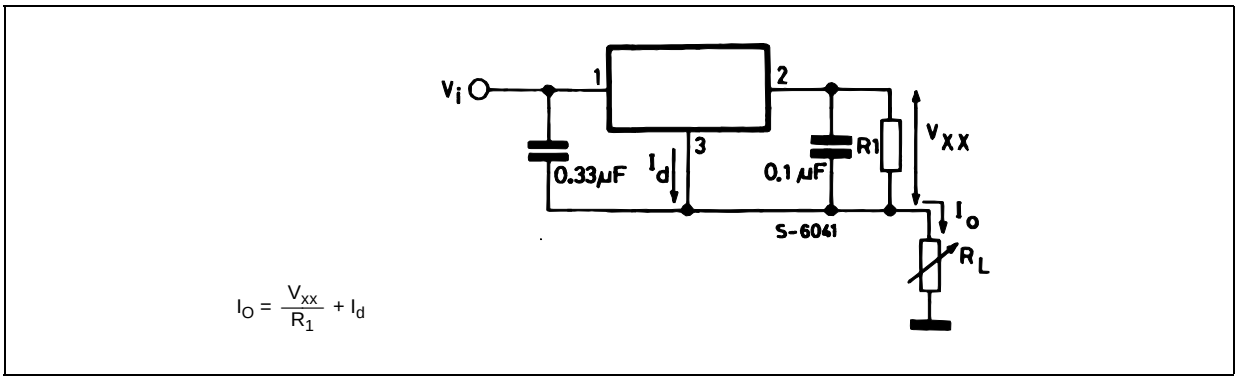

Figure 14 : Adjustable Output Regulator

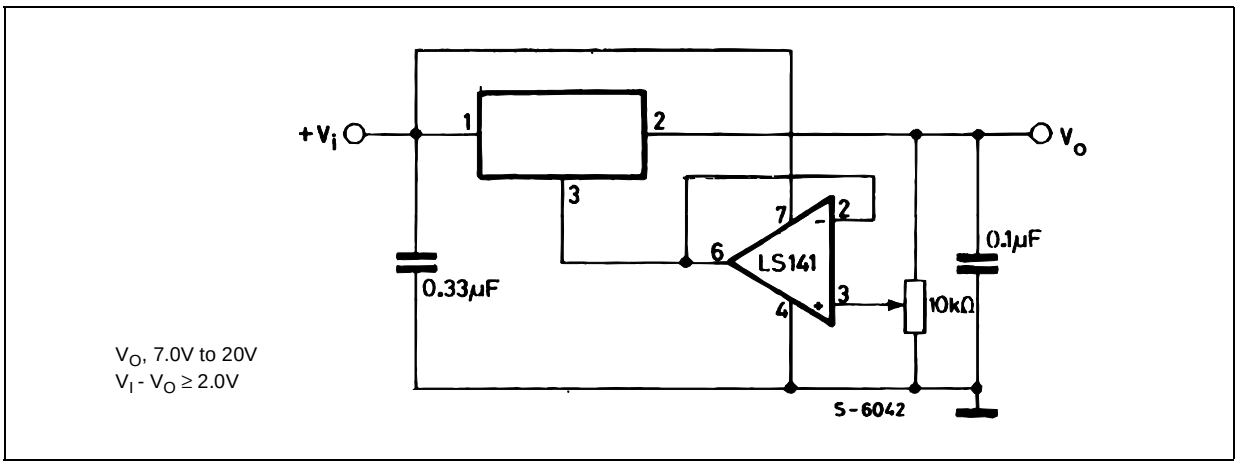

The addition of an operational amplifier allows adjustment to higher or intermediate values while retaining regulation characteristics. The minimum voltage obtainable with this arrangement is 2.0V greater than the regulator voltage.

Figure 15 : Current Boost Regulator

$$R_1 = \frac{V_{BEQ1}}{I_{REQ} - \frac{I_{Q1}}{\beta_{Q1}}}$$

$$I_O = I_{REG} + Q_1 \left(I_{REG} \frac{V_{BEQ1}}{R_1}\right)$$

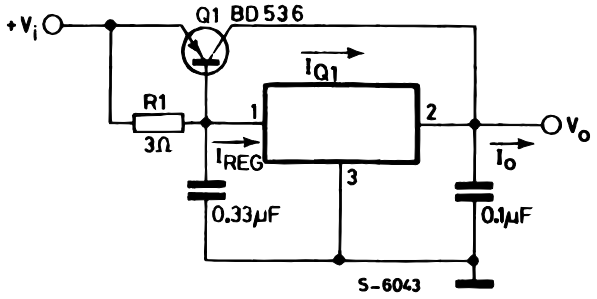

Figure 16 : Short-Circuit Protection

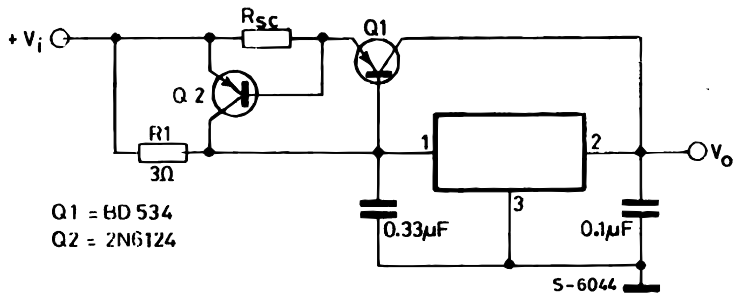

The circuit of figure 6 can be modified to provide supply protection against short circuits by adding a short-circuit sense resistor, RSC, and an additional PNP transistor. The current sensing PNP must be able to handle the short-circuit current of the three-terminal regulator. Therefore, a four-ampere plastic power transistor is specified.

TO-220 MECHANICAL DATA

DIM.	mm.			inch		
	MIN.	TYP	MAX.	MIN.	TYP.	MAX.
A	4.40		4.60	0.173		0.181
C	1.23		1.32	0.048		0.051
D	2.40		2.72	0.094		0.107
D1		1.27			0.050	
E	0.49		0.70	0.019		0.027
F	0.61		0.88	0.024		0.034
F1	1.14		1.70	0.044		0.067
F2	1.14		1.70	0.044		0.067
G	4.95		5.15	0.194		0.203
G1	2.4		2.7	0.094		0.106
H2	10.0		10.40	0.393		0.409
L2		16.4			0.645	
L4	13.0		14.0	0.511		0.551
L5	2.65		2.95	0.104		0.116
L6	15.25		15.75	0.600		0.620
L7	6.2		6.6	0.244		0.260
L9	3.5		3.93	0.137		0.154
DIA.	3.75		3.85	0.147		0.151

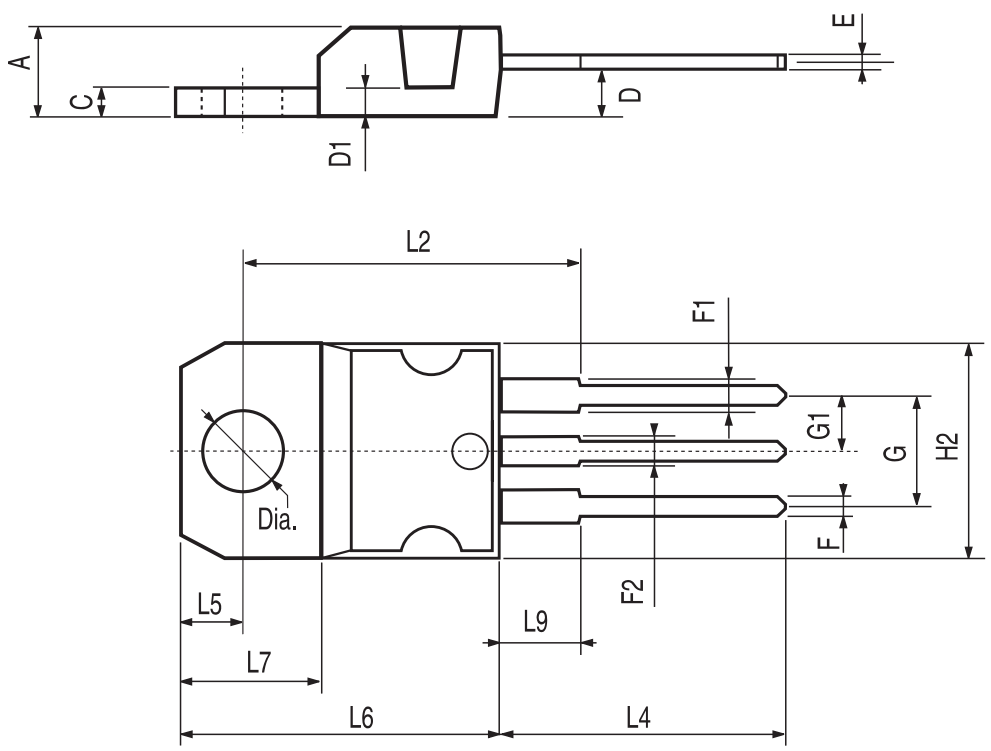

P011C

DPAK MECHANICAL DATA

DIM.	mm.			inch		
	MIN.	TYP	MAX.	MIN.	TYP.	MAX.
A	2.2		2.4	0.086		0.094
A1	0.9		1.1	0.035		0.043
A2	0.03		0.23	0.001		0.009
B	0.64		0.9	0.025		0.035
B2	5.2		5.4	0.204		0.212
C	0.45		0.6	0.017		0.023
C2	0.48		0.6	0.019		0.023
D	6		6.2	0.236		0.244
E	6.4		6.6	0.252		0.260
G	4.4		4.6	0.173		0.181
H	9.35		10.1	0.368		0.397
L2		0.8			0.031	
L4	0.6		1	0.023		0.039

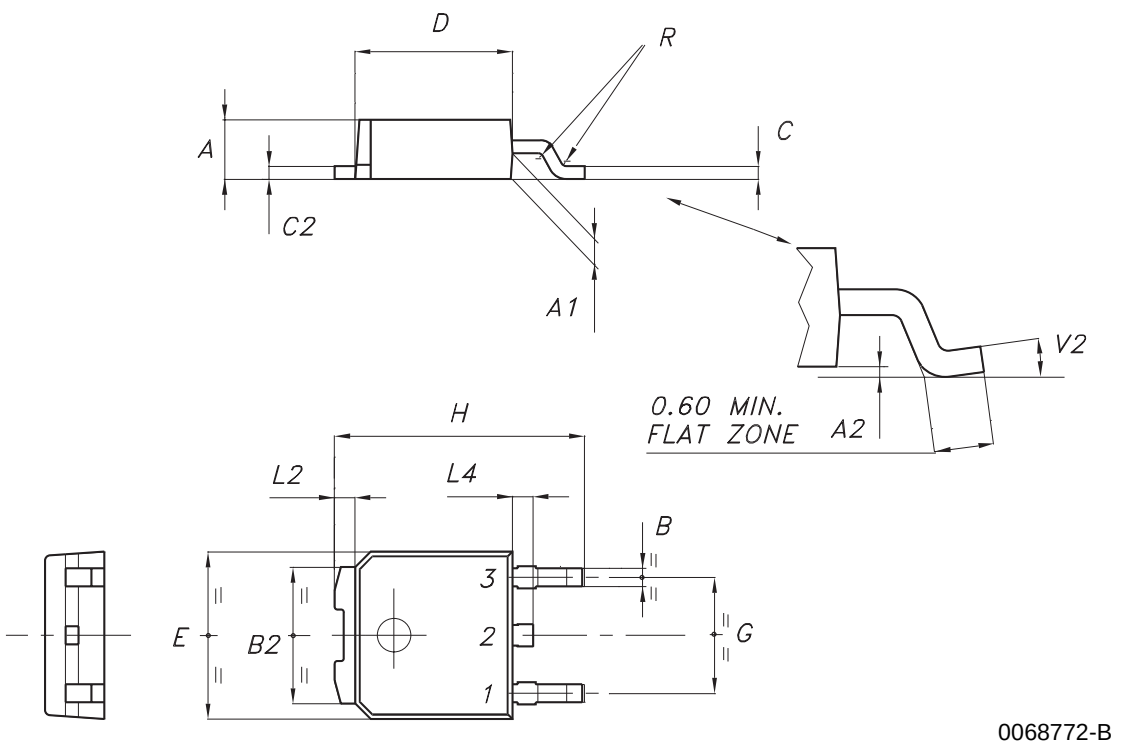

Tape & Reel DPAK-PPAK MECHANICAL DATA

DIM.	mm.			inch		
	MIN.	TYP	MAX.	MIN.	TYP.	MAX.
A			180			7.086
C	12.8	13.0	13.2	0.504	0.512	0.519
D	20.2			0.795		
N	60			2.362		
T			14.4			0.567
Ao	6.80	6.90	7.00	0.268	0.272	0.2.76
Bo	10.40	10.50	10.60	0.409	0.413	0.417
Ko	2.55	2.65	2.75	0.100	0.104	0.105
Po	3.9	4.0	4.1	0.153	0.157	0.161
P	7.9	8.0	8.1	0.311	0.315	0.319

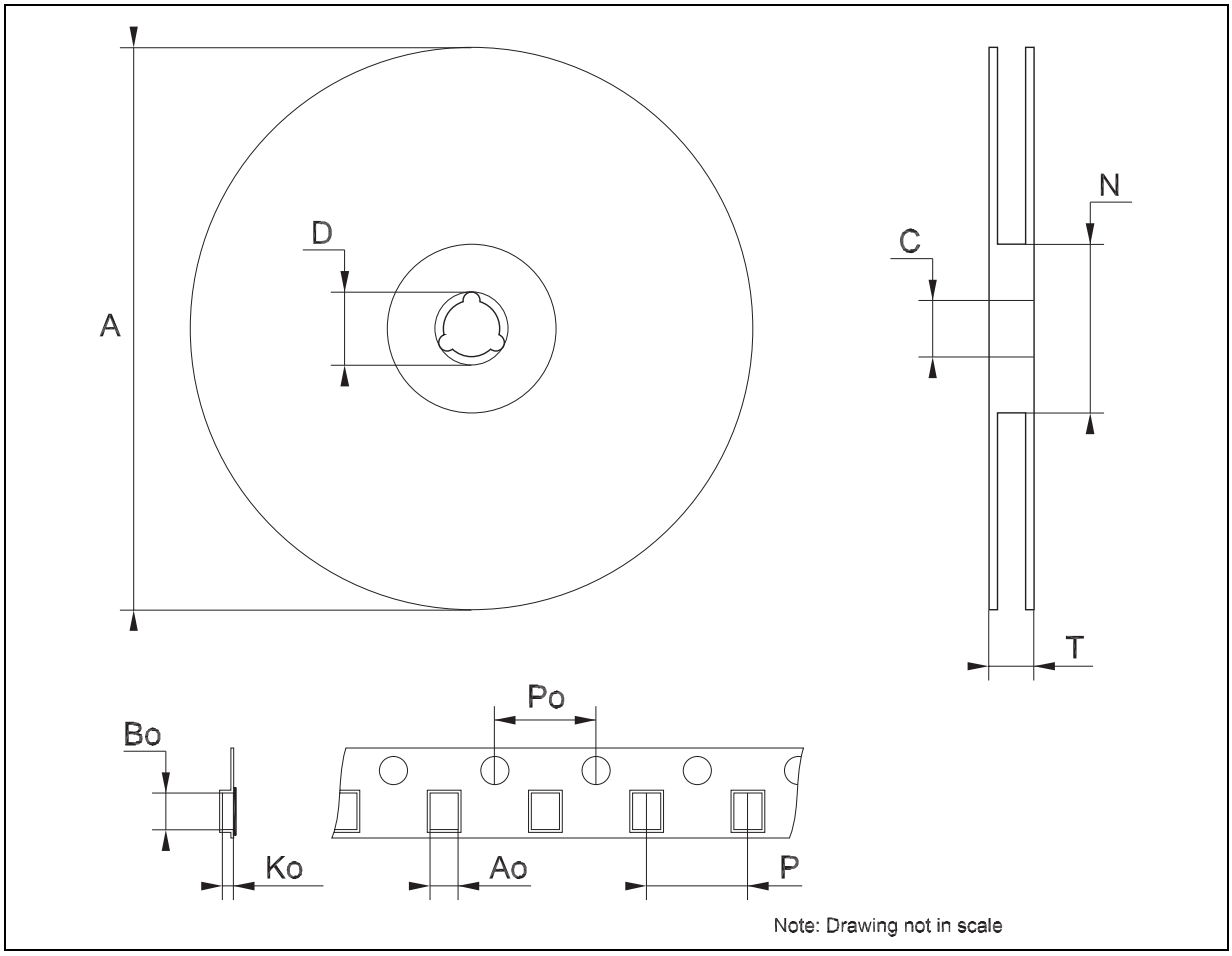

Information furnished is believed to be accurate and reliable. However, STMicroelectronics assumes no responsibility for the consequences of use of such information nor for any infringement of patents or other rights of third parties which may result from its use. No license is granted by implication or otherwise under any patent or patent rights of STMicroelectronics. Specifications mentioned in this publication are subject to change without notice. This publication supersedes and replaces all information previously supplied. STMicroelectronics products are not authorized for use as critical components in life support devices or systems without express written approval of STMicroelectronics.

© The ST logo is a registered trademark of STMicroelectronics

© 2003 STMicroelectronics - Printed in Italy - All Rights Reserved
STMicroelectronics GROUP OF COMPANIES
Australia - Brazil - Canada - China - Finland - France - Germany - Hong Kong - India - Israel - Italy - Japan - Malaysia - Malta - Morocco
Singapore - Spain - Sweden - Switzerland - United Kingdom - United States.
© http://www.st.com