查询AD7472供应商 捷多邦，专业PCB打样工厂，24小时加急出货

ANALOG DEVICES

1.75 MSPS, 4 mW 10-Bit/12-Bit Parallel ADCs

AD7470/AD7472

FEATURES

Specified for V_{DD} of 2.7 V to 5.25 V
1.75 MSPS for AD7470 (10-Bit)
1.5 MSPS for AD7472 (12-Bit)
Low Power
- **AD7470: 3.34 mW Typ at 1.5 MSPS with 3 V Supplies**
  7.97 mW Typ at 1.75 MSPS with 5 V Supplies
- **AD7472: 3.54 mW Typ at 1.2 MSPS with 3 V Supplies**
  8.7 mW Typ at 1.5 MSPS with 5 V Supplies

Wide Input Bandwidth
70 dB Typ SNR at 500 kHz Input Frequency
Flexible Power/Throughput Rate Management
No Pipeline Delays
High Speed Parallel Interface
Sleep Mode: 50 nA Typ
24-Lead SOIC and TSSOP Packages

FUNCTIONAL BLOCK DIAGRAM

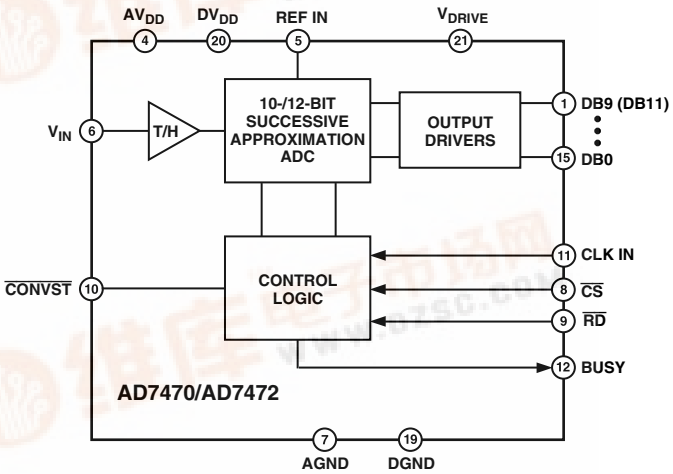

AD7470 IS A 10-BIT PART WITH DB0 TO DB9 AS OUTPUTS.
AD7472 IS A 12-BIT PART WITH DB0 TO DB11 AS OUTPUTS.

GENERAL DESCRIPTION

The AD7470/AD7472 are 10-bit/12-bit high speed, low power, successive-approximation ADCs. The parts operate from a single 2.7 V to 5.25 V power supply and feature throughput rates up to 1.5 MSPS for the 12-bit AD7472 and up to 1.75 MSPS for the 10-bit AD7470. The parts contain a low noise, wide bandwidth track/hold amplifier that can handle input frequencies in excess of 1 MHz.

The conversion process and data acquisition are controlled using standard control inputs allowing easy interfacing to microprocessors or DSPs. The input signal is sampled on the falling edge of $\overline{\text{CONVST}}$ and conversion is also initiated at this point. The BUSY goes high at the start of conversion and goes low 531.66 ns after falling edge of $\overline{\text{CONVST}}$ (AD7472 with a clock frequency of 26 MHz) to indicate that the conversion is complete. There are no pipelined delays associated with the part. The conversion result is accessed via standard $\overline{\text{CS}}$ and $\overline{\text{RD}}$ signals over a high speed parallel interface.

The AD7470/AD7472 uses advanced design techniques to achieve very low power dissipation at high throughput rates. With 3 V supplies and 1.5 MSPS throughput rate, the AD7470 typically consumes, on average, just 1.1 mA. With 5 V supplies and 1.75 MSPS, the average current consumption is typically 1.6 mA. The part also offers flexible power/throughput rate management. Operating the AD7470 with 3 V supplies and 500 kSPS throughput reduces the current consumption to 713 µA. At 5 V supplies and 500 kSPS, the part consumes 944 µA.

It is also possible to operate the parts in an auto sleep mode, where the part wakes up to do a conversion and automatically enters sleep mode at the end of conversion. Using this method allows very low power dissipation numbers at lower throughput rates. In this mode, the AD7472 can be operated with 3 V supplies at 100 kSPS, and consume an average current of just 124 µA. At 5 V supplies and 100 kSPS, the average current consumption is 171 µA.

The analog input range for the part is 0 to REF IN. The +2.5 V reference is applied externally to the REF IN pin. The conversion rate is determined by the externally-applied clock.

PRODUCT HIGHLIGHTS

1. High Throughput with Low Power Consumption. The AD7470 offers 1.75 MSPS throughput and the AD7472 offers 1.5 MSPS throughput rates with 4 mW power consumption.
2. Flexible Power/Throughput Rate Management. The conversion rate is determined by an externally-applied clock allowing the power to be reduced as the conversion rate is reduced. The part also features an auto sleep mode to maximize power efficiency at lower throughput rates.
3. No Pipeline Delay. The part features a standard successive-approximation ADC with accurate control of the sampling instant via a $\overline{\text{CONVST}}$ input and once off conversion control.

REV. A

Information furnished by Analog Devices is believed to be accurate and reliable. However, no responsibility is assumed by Analog Devices for its use, nor for any infringements of patents or other rights of third parties which may result from its use. No license is granted by implication or otherwise under any patent or patent rights of Analog Devices.

One Technology Way, P.O. Box 9106, Norwood, MA 02062-9106, U.S.A.
Tel: 781/329-4700 World Wide Web Site: http://www.analog.com
Fax: 781/326-8703
© Analog Devices, Inc., 2000

AD7470–SPECIFICATIONS[1] (V_{DD} = +2.7 V to +5.25 V[2], REF IN = 2.5 V, $f_{CLK\ IN}$ = 30 MHz @ 5 V and 24 MHz @ 3 V; $T_A = T_{MIN}$ to T_{MAX}[3], unless otherwise noted.)

Parameter	A Version[1]		Units	Test Conditions/Comments
DYNAMIC PERFORMANCE	**5 V**	**3 V**		f_S = 1.75 MSPS @ 5 V, f_S = 1.5 MSPS @ 3 V
Signal to Noise + Distortion (SINAD)	60	60	dB min	f_{IN} = 500 kHz Sine Wave
	60	60		f_{IN} = 100 kHz Sine Wave
Signal-to-Noise Ratio (SNR)	60	60	dB min	f_{IN} = 500 kHz Sine Wave
	60	60		f_{IN} = 100 kHz Sine Wave
Total Harmonic Distortion (THD)	–83	–83	dB typ	f_{IN} = 500 kHz Sine Wave
	–75	–75	dB max	f_{IN} = 100 kHz Sine Wave
Peak Harmonic or Spurious Noise (SFDR)	–85	–85	dB typ	f_{IN} = 500 kHz Sine Wave
	–75	–75	dB max	f_{IN} = 100 kHz Sine Wave
Intermodulation Distortion (IMD)				
Second Order Terms	–79	–75	dB typ	f_{IN} = 500 kHz Sine Wave
	–75	–75	dB max	f_{IN} = 100 kHz Sine Wave
Third Order Terms	–77	–75	dB typ	f_{IN} = 500 kHz Sine Wave
	–75	–75	dB max	f_{IN} = 100 kHz Sine Wave
Aperture Delay	5	5	ns typ	
Aperture Jitter	15	15	ps typ	
Full Power Bandwidth	20	20	MHz typ	
DC ACCURACY				f_S = 1.75 MSPS @ 5 V; f_S = 1.5 MSPS @ 3 V
Resolution	10	10	Bits	
Integral Nonlinearity	±1	±1	LSB max	
Differential Nonlinearity	±0.9	±0.9	LSB max	Guaranteed No Missed Codes to 10 Bits
Offset Error	±2.5	±2.5	LSB max	
Gain Error	±1	±1	LSB max	
ANALOG INPUT				
Input Voltage Ranges	0 to REF IN	0 to REF IN	V	
DC Leakage Current	±1	±1	µA max	
Input Capacitance	33	33	pF typ	
REFERENCE INPUT				
REF IN Input Voltage Range	2.5	2.5	V	±1% for Specified Performance
DC Leakage Current	±1	±1	µA max	
Input Capacitance	10/20	10/20	pF typ	Track/Hold Mode
LOGIC INPUTS				
Input High Voltage, V_{INH}	2.4	2.4	V min	
Input Low Voltage, V_{INL}	0.4	0.4	V max	
Input Current, I_{IN}	±1	±1	µA max	Typically 10 nA, V_{IN} = 0 V or V_{DD}
Input Capacitance, C_{IN}[4]	10	10	pF max	
LOGIC OUTPUTS				
Output High Voltage, V_{OH}	V_{DRIVE} – 0.2	V_{DRIVE} – 0.2	V min	I_{SOURCE} = 200 µA
Output Low Voltage, V_{OL}	0.4	0.4	V max	I_{SINK} = 200 µA
Floating-State Leakage Current	±10	±10	µA max	V_{DD} = 2.7 V to 5.25 V
Floating-State Output Capacitance	10	10	pF max	
Output Coding	Straight (Natural) Binary			
CONVERSION RATE				
Conversion Time	12	12	CLK IN Cycles (max)	
Track/Hold Acquisition Time	135	135	ns min	
Throughput Rate	1.75	1.5	MSPS max	Conversion Time + Acquisition Time CLK IN of 30 MHz @ 5 V and 24 MHz @ 3 V
POWER REQUIREMENTS				
V_{DD}	+2.7/+5.25		V min/max	
I_{DD}[5]				Digital I/Ps = 0 V or DV_{DD}
Normal Mode	2.4		mA max	V_{DD} = 4.75 V to 5.25 V; f_S = 1.75 MSPS; Typ 2 mA
Quiescent Current	900		µA max	V_{DD} = 4.75 V to 5.25 V; f_S = 1.75 MSPS
Normal Mode	1.5		mA max	V_{DD} = 2.7 V to 3.3 V; f_S = 1.5 MSPS; Typ 1.3 mA
Quiescent Current	800		µA max	V_{DD} = 2.7 V to 3.3 V; f_S = 1.5 MSPS
Sleep Mode	1		µA max	CLK IN = 0 V or DV_{DD}
Power Dissipation[5]				Digital I/Ps = 0 V or DV_{DD}
Normal Mode	12		mW max	V_{DD} = 5 V
	4.5		mW max	V_{DD} = 3 V
Sleep Mode	5		µW max	V_{DD} = 5 V; CLK IN = 0 V or DV_{DD}
	3		µW max	V_{DD} = 3 V; CLK IN = 0 V or DV_{DD}

NOTES
[1]Temperature ranges as follows: A Version: -40°C to +85°C.
[2]The AD7470 functionally works at 2.35 V. Typical specifications @ +25°C for SNR (100 kHz) = 59 dB; THD (100 kHz) = –84 dB; INL ±0.8 LSB.
[3]The AD7470 will typically maintain A-grade performance up to +125°C, with a reduced CLK of 20 MHz @ 5 V and 16 MHz @ 3 V. Typical Sleep Mode current @ +125°C is 700 nA.
[4]Sample tested @ +25°C to ensure compliance.
[5]See Power vs. Throughput Rate section.

Specifications subject to change without notice.

AD7472—SPECIFICATIONS[1] (V_{DD} = +2.7 V to +5.25 V[2], REF IN = 2.5 V, $f_{CLK\ IN}$ = 26 MHz @ 5 V and 20 MHz @ 3 V; T_A = T_{MIN} to T_{MAX}[3], unless otherwise noted.)

Parameter	A Version[1]		B Version[1]		Units	Test Conditions/Comments
DYNAMIC PERFORMANCE	5 V	3 V	5 V	3 V		f_S = 1.5 MSPS @ 5 V, f_S = 1.2 MSPS @ 3 V
Signal to Noise + Distortion (SINAD)	69	69	69	69	dB typ	f_{IN} = 500 kHz Sine Wave
	68	68	68	68	dB min	f_{IN} = 100 kHz Sine Wave
Signal-to-Noise Ratio (SNR)	70	70	70	70	dB typ	f_{IN} = 500 kHz Sine Wave
	68	68	68	68	dB min	f_{IN} = 100 kHz Sine Wave
Total Harmonic Distortion (THD)	–83	–78	–83	–78	dB typ	f_{IN} = 500 kHz Sine Wave
	–83	–84	–83	–84	dB typ	f_{IN} = 100 kHz Sine Wave
	–75	–75	–75	–75	dB max	f_{IN} = 100 kHz Sine Wave
Peak Harmonic or Spurious Noise (SFDR)	–86	–81	–86	–81	dB typ	f_{IN} = 500 kHz Sine Wave
	–86	–86	–86	–86	dB typ	f_{IN} = 100 kHz Sine Wave
	–76	–76	–76	–76	dB max	f_{IN} = 100 kHz Sine Wave
Intermodulation Distortion (IMD)						
Second Order Terms	–77	–77	–77	–77	dB typ	f_{IN} = 500 kHz Sine Wave
	–86	–86	–86	–86	dB typ	f_{IN} = 100 kHz Sine Wave
Third Order Terms	–77	–77	–77	–77	dB typ	f_{IN} = 500 kHz Sine Wave
	–86	–86	–86	–86	dB typ	f_{IN} = 100 kHz Sine Wave
Aperture Delay	5	5	5	5	ns typ	
Aperture Jitter	15	15	15	15	ps typ	
Full Power Bandwidth	20	20	20	20	MHz typ	
DC ACCURACY						f_S = 1.5 MSPS @ 5 V; f_S = 1.2 MSPS @ 3 V
Resolution	12	12	12	12	Bits	
Integral Nonlinearity	±2	±2	±1	±1	LSB max	Guaranteed No Missed Codes to 11 Bits (A Version)
Differential Nonlinearity	±1.8	±1.8	±0.9	±0.9	LSB max	Guaranteed No Missed Codes to 12 Bits (B Version)
Offset Error	±10	±10	±10	±10	LSB max	
Gain Error	±2	±2	±2	±2	LSB max	
ANALOG INPUT						
Input Voltage Ranges	0 to REF IN	0 to REF IN	0 to REF IN	0 to REF IN	V	
DC Leakage Current	±1	±1	±1	±1	µA max	
Input Capacitance	33	33	33	33	pF typ	
REFERENCE INPUT						
REF IN Input Voltage Range	2.5	2.5	2.5	2.5	V	±1% for Specified Performance
DC Leakage Current	±1	±1	±1	±1	µA max	
Input Capacitance	10/20	10/20	10/20	10/20	pF typ	Track/Hold Mode
LOGIC INPUTS						
Input High Voltage, V_{INH}	2.4	2.4	2.4	2.4	V min	
Input Low Voltage, V_{INL}	0.4	0.4	0.4	0.4	V max	
Input Current, I_{IN}	±1	±1	±1	±1	µA max	Typically 10 nA, V_{IN} = 0 V or V_{DD}
Input Capacitance, C_{IN}[4]	10	10	10	10	pF max	
LOGIC OUTPUTS						
Output High Voltage, V_{OH}	V_{DRIVE} – 0.2	V_{DRIVE} – 0.2	V_{DRIVE} – 0.2	V_{DRIVE} – 0.2	V min	I_{SOURCE} = 200 µA
Output Low Voltage, V_{OL}	0.4	0.4	0.4	0.4	V max	I_{SINK} = 200 µA
Floating-State Leakage Current	±10	±10	±10	±10	µA max	V_{DD} = 2.7 V to 5.25 V
Floating-State Output Capacitance	10	10	10	10	pF max	
Output Coding	Straight (Natural) Binary		Straight (Natural) Binary			
CONVERSION RATE						
Conversion Time	14	14	14	14	CLK IN Cycles (max)	
Track/Hold Acquisition Time	135	135	135	135	ns min	
Throughput Rate	1.5	1.2	1.5	1.2	MSPS max	Conversion Time + Acquisition Time CLK IN Is 26 MHz @ 5 V and 20 MHz @ 3 V
POWER REQUIREMENTS						
V_{DD}	+2.7/+5.25		+2.7/+5.25		V min/max	
I_{DD}[5]						Digital I/Ps = 0 V or DV_{DD}
Normal Mode	2.4		2.4		mA max	V_{DD} = 4.75 V to 5.25 V; f_S = 1.5 MSPS; Typ 2 mA
Quiescent Current	900		900		µA max	V_{DD} = 4.75 V to 5.25 V; f_S = 1.5 MSPS
Normal Mode	1.5		1.5		mA max	V_{DD} = 2.7 V to 3.3 V; f_S = 1.2 MSPS; Typ 1.3 mA
Quiescent Current	800		800		µA	V_{DD} = 2.7 V to 3.3 V; f_S = 1.2 MSPS
Sleep Mode	1		1		µA max	CLK IN = 0 V or DV_{DD}
Power Dissipation[5]						Digital I/Ps = 0 V or DV_{DD}
Normal Mode	12		12		mW max	V_{DD} = 5 V
	4.5		4.5		mW max	V_{DD} = 3 V
Sleep Mode	5		5		µW max	V_{DD} = 5 V; CLK IN = 0 V or DV_{DD}
	3		3		µW max	V_{DD} = 3 V; CLK IN = 0 V or DV_{DD}

NOTES

[1]Temperature ranges as follows: A and B Versions: –40°C to +85°C.

[2]The AD7472 functionally works at 2.35 V. Typical specifications @ +25°C for SNR (100 kHz) = 68 dB; THD (100 kHz) = –84 dB; INL ±0.8 LSB.

[3]The AD7472 will typically maintain A-grade performance up to +125°C, with a reduced CLK of 18 MHz @ 5 V and 14 MHz @ 3 V. Typical Sleep Mode current @ +125°C is 700 nA.

[4]Sample tested @ +25°C to ensure compliance.

[5]See Power vs. Throughput Rate section.

Specifications subject to change without notice.

TIMING SPECIFICATIONS[1] (V_{DD} = +2.7 V to +5.25 V, REF IN = 2.5 V; T_A = T_{MIN} to T_{MAX}, unless otherwise noted.)

Parameter	Limit at T_{MIN}, T_{MAX} AD7470	AD7472	Units	Description
f_{CLK} [2]	10	10	kHz min	
	30	26	MHz max	
$t_{CONVERT}$	436.42	531.66	ns min	$t_{CLK} = 1/f_{CLK\ IN}$
t_{WAKEUP}	1	1	µs max	Wake-Up Time
t_1	10	10	ns min	$\overline{CONVST}$ Pulsewidth
t_2 [3]	10	10	ns max	$\overline{CONVST}$ to BUSY Delay, V_{DD} = 5 V
	30	30	ns max	$\overline{CONVST}$ to BUSY Delay, V_{DD} = 3 V
t_3	0	0	ns max	BUSY to $\overline{CS}$ Setup Time
t_4 [4]	0	0	ns max	$\overline{CS}$ to $\overline{RD}$ Setup Time
t_5	20	20	ns min	$\overline{RD}$ Pulsewidth
t_6 [4]	15	15	ns min	Data Access Time After Falling Edge of $\overline{RD}$
t_7 [5]	8	8	ns max	Bus Relinquish Time After Rising Edge of $\overline{RD}$
t_8	0	0	ns max	$\overline{CS}$ to $\overline{RD}$ Hold Time
t_9	135	135	ns min	Acquisition Time
t_{10}	100	100	ns min	Quiet Time

NOTES

[1]Sample tested at +25°C to ensure compliance. All input signals are specified with tr = tf = 5 ns (10% to 90% of V_{DD}) and timed from a voltage level of 1.6 V. See Figure 1.

[2]Mark/Space ratio for the CLK input is 40/60 to 60/40. First CLK pulse should be 10 ns min from falling edge of $\overline{CONVST}$.

[3]t_2 is 35 ns max @ +125°C.

[4]Measured with the load circuit of Figure 1 and defined as the time required for the output to cross 0.8 V or 2.0 V.

[5]t_7 is derived from the measured time taken by the data outputs to change 0.5 V when loaded with the circuit of Figure 1. The measured number is then extrapolated back to remove the effects of charging or discharging the 50 pF capacitor. This means that the time, t_7, quoted in the timing characteristics is the true bus relinquish time of the part and is independent of the bus loading.

Specifications subject to change without notice.

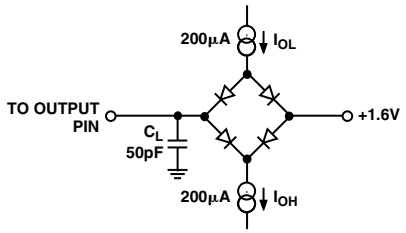

Figure 1. Load Circuit for Digital Output Timing Specifications

ABSOLUTE MAXIMUM RATINGS[1]

(T_A = +25°C unless otherwise noted)

AV_{DD} to AGND/DGND . . . . . –0.3 V to +7 V
DV_{DD} to AGND/DGND . . . . . –0.3 V to +7 V
V_{DRIVE} to AGND/DGND . . . . . –0.3 V to +7 V
AV_{DD} to DV_{DD} . . . . . –0.3 V to +0.3 V
V_{DRIVE} to DV_{DD} . . . . . –0.3 V to DVDD + 0.3 V
AGND TO DGND . . . . . –0.3 V to +0.3 V
Analog Input Voltage to AGND . . . –0.3 V to AVDD + 0.3 V
Digital Input Voltage to DGND . . . –0.3 V to DVDD + 0.3 V
REF IN to AGND . . . . . –0.3 V to AVDD + 0.3 V
Input Current to Any Pin Except Supplies[2] . . . . . ±10 mA
Operating Temperature Range
Commercial (A and B Version) . . . . . –40°C to +85°C
Storage Temperature Range . . . . . –65°C to +150°C
Junction Temperature . . . . . +150°C
SOIC, TSSOP Package Dissipation . . . . . +450 mW
θ_{JA} Thermal Impedance . . . . . 75°C/W (SOIC)
. . . . . 115°C/W (TSSOP)
θ_{JC} Thermal Impedance . . . . . 25°C/W (SOIC)
. . . . . 35°C/W (TSSOP)
Lead Temperature, Soldering
Vapor Phase (60 secs) . . . . . +215°C
Infrared (15 secs) . . . . . +220°C

NOTES
[1]Stresses above those listed under Absolute Maximum Ratings may cause permanent damage to the device. This is a stress rating only; functional operation of the device at these or any other conditions above those listed in the operational sections of this specification is not implied. Exposure to absolute maximum rating conditions for extended periods may affect device reliability.
[2]Transient currents of up to 100 mA will not cause SCR latch-up.

PIN CONFIGURATIONS

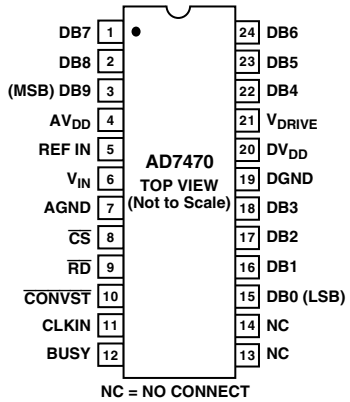

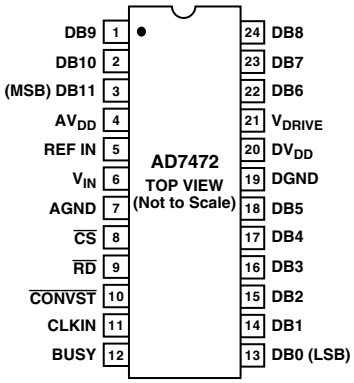

ORDERING GUIDE

Model	Temperature Range	Resolution (Bits)	Package Options[1]
AD7470ARU	–40°C to +85°C	10	RU-24
AD7472AR	–40°C to +85°C	12	R-24
AD7472BR	–40°C to +85°C	12	R-24
AD7472ARU	–40°C to +85°C	12	RU-24
AD7472BRU	–40°C to +85°C	12	RU-24
EVAL-AD7470CB[2]			Evaluation Board
EVAL-AD7472CB[2]			Evaluation Board
EVAL-CONTROL BOARD[3]			Controller Board
HSC-INTERFACE BOARD			Evaluation High Speed Interface Board

NOTES
[1]R = SOIC; RU = TSSOP.
[2]This can be used as a stand-alone evaluation board or in conjunction with the EVAL-CONTROL BOARD for evaluation/demonstration purposes.
[3]This board is a complete unit allowing a PC to control and communicate with all Analog Devices evaluation boards ending in the CB designators.

CAUTION

ESD (electrostatic discharge) sensitive device. Electrostatic charges as high as 4000 V readily accumulate on the human body and test equipment and can discharge without detection. Although the AD7470/AD7472 features proprietary ESD protection circuitry, permanent damage may occur on devices subjected to high energy electrostatic discharges. Therefore, proper ESD precautions are recommended to avoid performance degradation or loss of functionality.

PIN FUNCTION DESCRIPTION

Pin Mnemonic	Function
$\overline{CS}$	Chip Select. Active low logic input used in conjunction with $\overline{RD}$ to access the conversion result. The conversion result is placed on the data bus following the falling edge of both $\overline{CS}$ and $\overline{RD}$. $\overline{CS}$ and $\overline{RD}$ are both connected to the same AND gate on the input so the signals are interchangeable. $\overline{CS}$ can be hardwired permanently low.
$\overline{RD}$	Read Input. Logic Input used in conjunction with $\overline{CS}$ to access the conversion result. The conversion result is placed on the data bus following the falling edge of both $\overline{CS}$ and $\overline{RD}$. $\overline{CS}$ and $\overline{RD}$ are both connected to same AND gate on the input so the signals are interchangeable. $\overline{CS}$ and $\overline{RD}$ can be hardwired permanently low in which case, the data bus is always active and the result of the new conversion is clocked out slightly before to the BUSY line going low.
$\overline{CONVST}$	Conversion Start Input. Logic Input used to initiate conversion. The input track/hold amplifier goes from track mode to hold mode on the falling edge of $\overline{CONVST}$ and the conversion process is initiated at this point. The conversion input can be as narrow as 15 ns. If the $\overline{CONVST}$ input is kept low for the duration of conversion and is still low at the end of conversion, the part will automatically enter sleep mode. If the part enters this sleep mode, the next rising edge of $\overline{CONVST}$ wakes up the part. Wake-up time for the part is typically 1 μs.
CLK IN	Master Clock Input. The clock source for the conversion process is applied to this pin. Conversion time for the AD7472 takes 14 clock cycles while conversion time for the AD7470 takes 12 clock cycles. The frequency of this master clock input, therefore, determines the conversion time and achievable throughput rate. While the ADC is not converting, the Clock-In pad is in three-state and thus no clock is going through the part.
BUSY	BUSY Output. Logic Output indicating the status of the conversion process. The BUSY signal goes high after the falling edge of $\overline{CONVST}$ and stays high for the duration of conversion. Once conversion is complete and the conversion result is in the output register, the BUSY line returns low. The track/hold returns to track mode just prior to the falling edge of BUSY and the acquisition time for the part begins when BUSY goes low. If the $\overline{CONVST}$ input is still low when BUSY goes low, the part automatically enters its sleep mode on the falling edge of BUSY.
REF IN	Reference Input. An external reference must be applied to this input. The voltage range for the external reference is 2.5 V ±1% for specified performance.
AV_{DD}	Analog Supply Voltage, +2.7 V to +5.25 V. This is the only supply voltage for all analog circuitry on the AD7470/AD7472. The AV_{DD} and DV_{DD} voltages should ideally be at the same potential and must not be more than 0.3 V apart even on a transient basis. This supply should be decoupled to AGND.
DV_{DD}	Digital Supply Voltage, +2.7 V to +5.25 V. This is the supply voltage for all digital circuitry on the AD7470/AD7472 apart from the output drivers. The DV_{DD} and AV_{DD} voltages should ideally be at the same potential and must not be more than 0.3 V apart even on a transient basis. This supply should be decoupled to DGND.
AGND	Analog Ground. Ground reference point for all analog circuitry on the AD7470/AD7472. All analog input signals and any external reference signal should be referred to this AGND voltage. The AGND and DGND voltages should ideally be at the same potential and must not be more than 0.3 V apart even on a transient basis.
DGND	Digital Ground. This is the ground reference point for all digital circuitry on the AD7470 and AD7472. The DGND and AGND voltages should ideally be at the same potential and must not be more than 0.3 V apart even on a transient basis.
V_{IN}	Analog Input. Single-ended analog input channel. The input range is 0 V to REFIN. The analog input presents a high dc input impedance.
V_{DRIVE}	Supply Voltage for the Output Drivers, +2.7 V to +5.25 V. This voltage determines the output high voltage for the data output pins. It allows the AV_{DD} and DV_{DD} to operate at 5 V (and maximize the dynamic performance of the ADC) while the digital outputs can interface to 3 V logic.
DB0–DB9/11	Data Bit 0 to Data Bit 9 (AD7470) and DB11 (AD7472). Parallel digital outputs that provide the conversion result for the part. These are three-state outputs that are controlled by $\overline{CS}$ and $\overline{RD}$. The output high voltage level for these outputs is determined by the V_{DRIVE} input.

TERMINOLOGY

Integral Nonlinearity

This is the maximum deviation from a straight line passing through the endpoints of the ADC transfer function. The endpoints of the transfer function are zero scale, a point 1/2 LSB below the first code transition, and full scale, a point 1/2 LSB above the last code transition.

Differential Nonlinearity

This is the difference between the measured and the ideal 1 LSB change between any two adjacent codes in the ADC.

Offset Error

This is the deviation of the first code transition (00 . . . 000) to (00 . . . 001) from the ideal, i.e., AGND + 1 LSB.

Gain Error

The last transition should occur at the analog value 1 1/2 LSB below the nominal full scale. The first transition is a 1/2 LSB above the low end of the scale (zero in the case of AD7470/AD7472). The gain error is the deviation of the actual difference between the first and last code transitions from the ideal difference between the first and last code transitions with offset errors removed.

Track/Hold Acquisition Time

The track/hold amplifier returns into track mode after the end of conversion. Track/Hold acquisition time is the time required for the output of the track/hold amplifier to reach its final value, within ±1 LSB, after the end of conversion.

Signal to (Noise + Distortion) Ratio

This is the measured ratio of signal to (noise + distortion) at the output of the A/D converter. The signal is the rms amplitude of the fundamental. Noise is the sum of all nonfundamental signals up to half the sampling frequency ($f_S/2$), excluding dc. The ratio is dependent on the number of quantization levels in the digitization process; the more levels, the smaller the quantization noise. The theoretical signal to (noise + distortion) ratio for an ideal N-bit converter with a sine wave input is given by:

$$\textit{Signal to (Noise + Distortion)} = (6.02\,N + 1.76)\ dB$$

Thus for a 12-bit converter, this is 74 dB and for a 10-bit converter is 62 dB.

Total Harmonic Distortion

Total harmonic distortion (THD) is the ratio of the rms sum of harmonics to the fundamental. For the AD7470/AD7472 it is defined as:

$$THD\ (dB) = 20\ \log \frac{\sqrt{(V_2^2 + V_3^2 + V_4^2 + V_5^2 + V_6^2)}}{V_1}$$

where V_1 is the rms amplitude of the fundamental and V_2, V_3, V_4, V_5 and V_6 are the rms amplitudes of the second through the sixth harmonics.

Peak Harmonic or Spurious Noise

Peak harmonic or spurious noise is defined as the ratio of the rms value of the next largest component in the ADC output spectrum (up to $f_S/2$ and excluding dc) to the rms value of the fundamental. Normally, the value of this specification is determined by the largest harmonic in the spectrum, but for ADCs where the harmonics are buried in the noise floor, it will be a noise peak.

Intermodulation Distortion

With inputs consisting of sine waves at two frequencies, fa and fb, any active device with nonlinearities will create distortion products at sum and difference frequencies of mfa ± nfb where m, n = 0, 1, 2, 3, etc. Intermodulation distortion terms are those for which neither m nor n is equal to zero. For example, the second order terms include (fa + fb) and (fa – fb), while the third order terms include (2fa + fb), (2fa – fb), (fa + 2fb) and (fa – 2fb).

The AD7470/AD7472 are tested using the CCIF standard where two input frequencies near the top end of the input bandwidth are used. In this case, the second order terms are usually distanced in frequency from the original sine waves while the third order terms are usually at a frequency close to the input frequencies. As a result, the second and third order terms are specified separately. The calculation of the intermodulation distortion is as per the THD specification where it is the ratio of the rms sum of the individual distortion products to the rms amplitude of the sum of the fundamentals expressed in dBs.

Aperture Delay

In a sample/hold, the time required after the hold command for the switch to open fully is the aperture delay. The sample is, in effect, delayed by this interval, and the hold command would have to be advanced by this amount for precise timing.

Aperture Jitter

Aperture jitter is the range of variation in the aperture delay. In other words, it is the uncertainty about when the sample is taken. Jitter is the result of noise which modulates the phase of the hold command. This specification establishes the ultimate timing error, hence the maximum sampling frequency for a given resolution. This error will increase as the input dV/dt increases.

CIRCUIT DESCRIPTION

CONVERTER OPERATION

The AD7470/AD7472 is a 10-bit/12-bit successive approximation analog-to-digital converter based around a capacitive DAC. The AD7470/AD7472 can convert analog input signals in the range 0 V to V_{REF}. Figure 2 shows a very simplified schematic of the ADC. The Control Logic, SAR and the Capacitive DAC are used to add and subtract fixed amounts of charge from the sampling capacitor to bring the comparator back into a balanced condition.

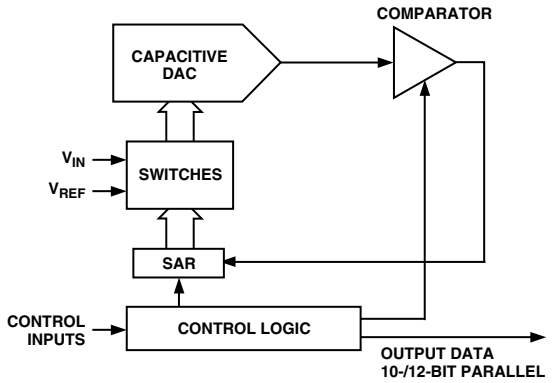

Figure 2. Simplified Block Diagram of AD7470/AD7472

Figure 3 shows the ADC during its acquisition phase. SW2 is closed and SW1 is in Position A. The comparator is held in a balanced condition and the sampling capacitor acquires the signal on V_{IN}.

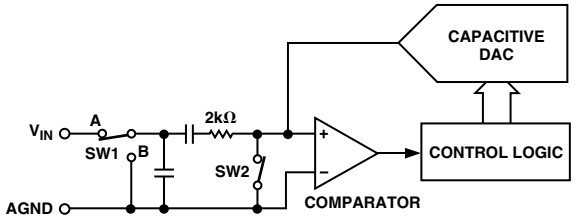

Figure 3. ADC Acquisition Phase

Figure 4 shows the ADC during conversion. When conversion starts SW2 will open and SW1 will move to position B, causing the comparator to become unbalanced. The ADC then runs through its successive approximation routine and brings the comparator back into a balanced condition. When the comparator is rebalanced, the conversion result is available in the SAR register.

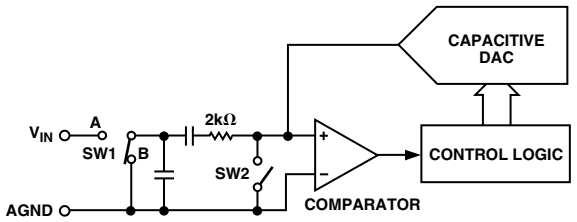

Figure 4. ADC Conversion Phase

TYPICAL CONNECTION DIAGRAM

Figure 5 shows a typical connection diagram for the AD7470/AD7472. Conversion is initiated by a falling edge on $\overline{CONVST}$. Once $\overline{CONVST}$ goes low the BUSY signal goes high, and at the end of conversion the falling edge of BUSY is used to activate an Interrupt Service Routine. The $\overline{CS}$ and $\overline{RD}$ lines are then activated in parallel to read the 10- or 12-data bits. The recommended REF IN voltage is 2.5 V providing an analog input range of 0 V to 2.5 V, making the AD7470/AD7472 a unipolar A/D. It is recommended to perform a dummy conversion after power-up as the first conversion result could be incorrect. This also ensures that the part is in the correct mode of operation. The $\overline{CONVST}$ pin should not be floating when power is applied as a rising edge on CONVST might not wake up the part.

In Figure 5 the V_{DRIVE} pin is tied to DV_{DD}, which results in logic output voltage values being either 0 V or DV_{DD}. The voltage applied to V_{DRIVE} controls the voltage value of the output logic signals. For example, if DV_{DD} is supplied by a 5 V supply and V_{DRIVE} by a 3 V supply, the logic output voltage levels would be either 0 V or 3 V. This feature allows the AD7470/AD7472 to interface to 3 V parts while still enabling the A/D to process signals at 5 V supply.

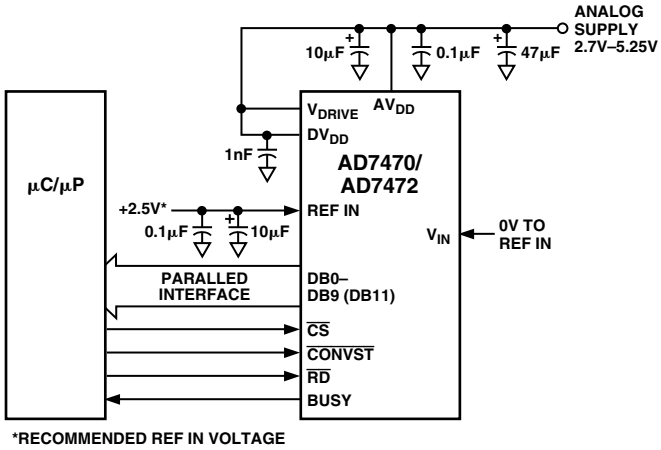

Figure 5. Typical Connection Diagram

ADC TRANSFER FUNCTION

The output coding of the AD7470/AD7472 is straight binary. The designed code transitions occur at successive integer LSB values (i.e., 1 LSB, 2 LSB, etc.). The LSB size is = (REF IN)/4096 for the AD7472 and (REF IN)/1024 for the AD7470. The ideal transfer characteristic for the AD7472 is shown in Figure 6.

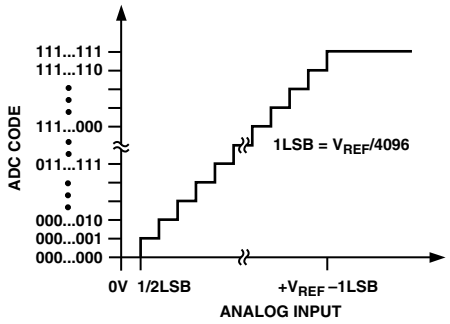

Figure 6. Transfer Characteristic for 12 Bits

AC ACQUISITION TIME

In ac applications it is recommended to always buffer analog input signals. The source impedance of the drive circuitry must be kept as low as possible to minimize the acquisition time of the ADC. Large values of impedance at the VIN pin of the ADC will cause the THD to degrade at high input frequencies.

INPUT BUFFERS	AD7470/AD7472 DYNAMIC PERFORMANCE SPECIFICATIONS		TYPICAL AMPLIFIER CURRENT CONSUMPTION
	SNR 500kHz	THD 500kHz	
AD8047	70	78	5.8mA
AD9631	69.5	80	17mA
AD8051	68.6	78	4.4mA
AD797	70	84	8.2mA

Figure 7. Recommended Input Buffers

Reference Input

The following references are best suited for use with the AD7470/AD7472.

ADR291
AD780
AD192

For optimum performance, a 2.5 V reference is recommended. The part can function with a reference up to 3 V and down to 2 V, but the performance deteriorates.

DC Acquisition Time

The ADC starts a new acquisition phase at the end of a conversion and ends it on the falling edge of the $\overline{\text{CONVST}}$ signal. At the end of conversion there is a settling time associated with the sampling circuit. This settling time lasts approximately 135 ns. The analog signal on V_{IN} is also being acquired during this settling time; therefore, the minimum acquisition time needed is approximately 135 ns.

Figure 8 shows the equivalent charging circuit for the sampling capacitor when the ADC is in its acquisition phase. R3 represents the source impedance of a buffer amplifier or resistive network, R1 is an internal switch resistance, R2 is for bandwidth control and C1 is the sampling capacitor. C2 is back-plate capacitance and switch parasitic capacitance.

During the acquisition phase the sampling capacitor must be charged to within 1 LSB of its final value.

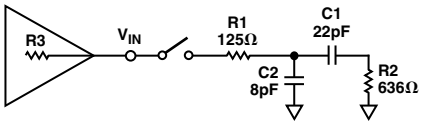

Figure 8. Equivalent Sampling Circuit

ANALOG INPUT

Figure 9 shows the equivalent circuit of the analog input structure of the AD7470/AD7472. The two diodes, D1 and D2, provide ESD protection for the analog inputs. The capacitor C3 is typically about 4 pF and can be primarily attributed to pin capacitance. The resistor R1 is an internal switch resistance. This resistor is typically about 125 Ω. The capacitor C1 is the sampling capacitor while R2 is used for bandwidth control.

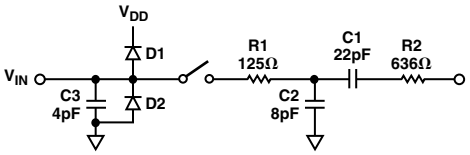

Figure 9. Equivalent Analog Input Circuit

CLOCK SOURCES

The max CLK specification for the AD7470 is 30 MHz and for the AD7472, it is 26 MHz. These frequencies are not standard off-the-shelf oscillator frequencies. Many manufacturers produce oscillator modules close to these frequencies; a typical one being 25.175 MHz from IQD Limited. AEL Crystals Limited produce a 25 MHz oscillator module in various packages. Crystal oscillator manufacturers will produce 26 MHz and 30 MHz oscillators to order. Of course any clock source can be used, not just crystal oscillators.

PARALLEL INTERFACE

The parallel interface of the AD7470 and AD7472 is 10-bits and 12-bits wide respectively. The output data buffers are activated when both $\overline{CS}$ and $\overline{RD}$ are logic low. At this point the contents of the data register are placed onto the data bus. Figure 10 shows the timing diagram for the parallel port.

Figure 11 shows the timing diagram for the parallel port when $\overline{CS}$ and $\overline{RD}$ are tied permanently low. In this setup, once the BUSY line goes from high to low the conversion process is completed. The data is available on the output bus slightly before the falling edge of BUSY.

It is important to point out that data bus cannot change state while the A/D is doing a conversion as this would have a detrimental effect on the conversion in progress. The data out lines will go three-state again when either the $\overline{RD}$ or $\overline{CS}$ line goes high. Thus the $\overline{CS}$ can be tied low permanently, leaving the $\overline{RD}$ line to control conversion result access. Please reference the V_{DRIVE} section for output voltage levels.

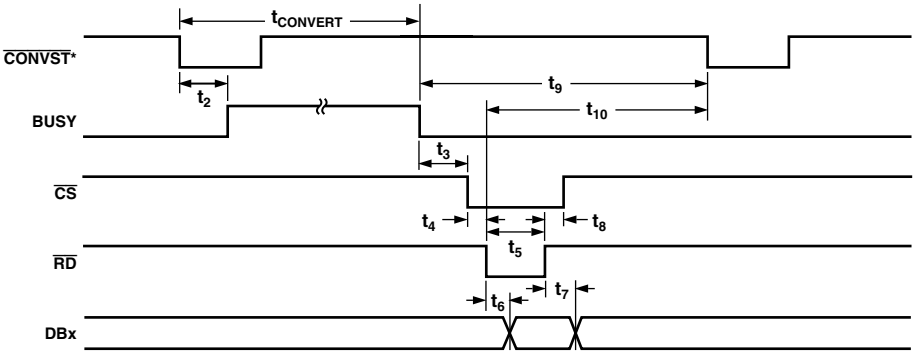

*$\overline{CONVST}$ SHOULD GO HIGH WHEN THE CLK IS HIGH OR BEFORE THE FIRST CLK CYCLE.

Figure 10. Parallel Port Timing

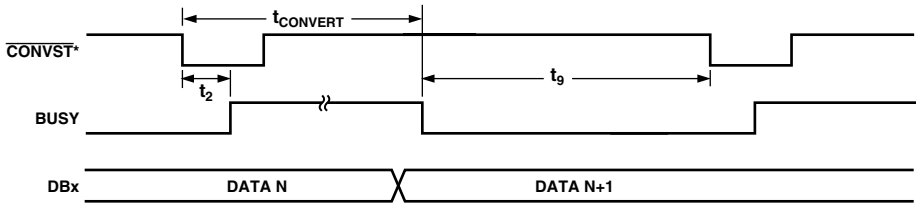

*$\overline{CONVST}$ SHOULD GO HIGH WHEN THE CLK IS HIGH OR BEFORE THE FIRST CLK CYCLE.

Figure 11. Parallel Port Timing with $\overline{CS}$ and $\overline{RD}$ Tied Low

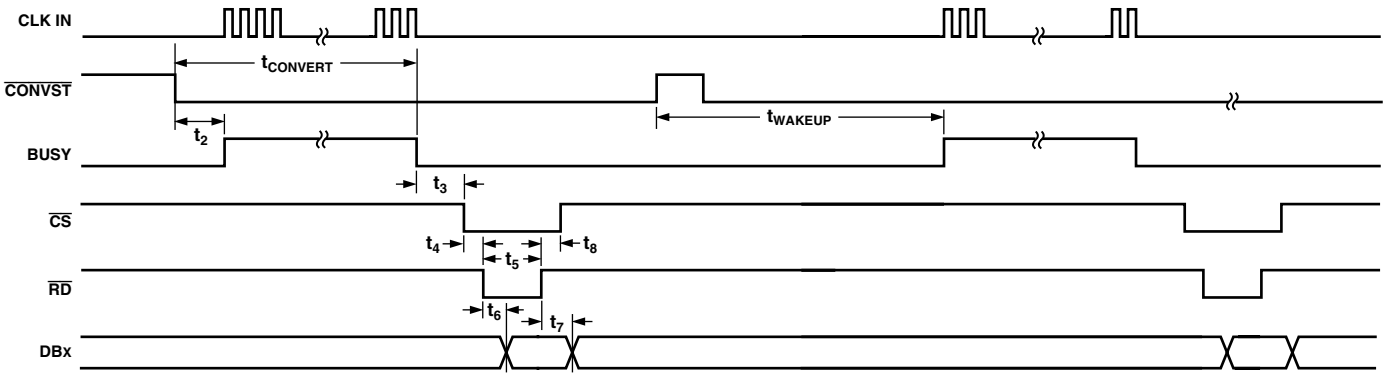

Figure 12. Wake-Up Timing Diagram (Burst Clock)

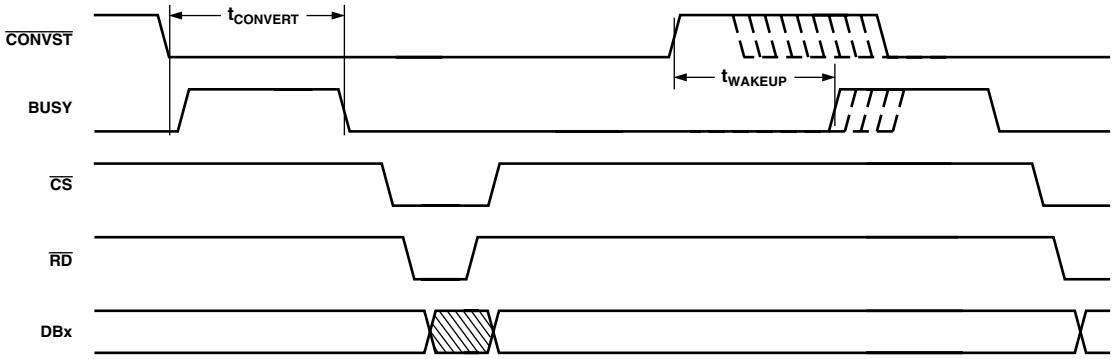

Figure 13. Mode 2 Operation

OPERATING MODES

The AD7470 and AD7472 have two possible modes of operation depending on the state of the $\overline{\text{CONVST}}$ pulse at the end of a conversion, Mode 1 and Mode 2. There is a continuous clock on the CLK IN pin.

Mode 1 (High Speed Sampling)

In this mode of operation the $\overline{\text{CONVST}}$ pulse is brought high before the end of conversion i.e., before the BUSY goes low (see Figure 10). If the $\overline{\text{CONVST}}$ pin is brought from high to low while BUSY is high, the conversion is restarted. When operating in this mode a new conversion should not be initiated until 135 ns after BUSY goes low. This acquisition time allows the track/hold circuit to accurately acquire the input signal. As mentioned earlier, a read should not be done during a conversion. This mode facilitates the fastest throughput times for the AD7470/AD7472.

Mode 2 (Sleep Mode)

Figure 13 shows AD7470/AD7472 in Mode 2 operation where the ADC goes into sleep mode after conversion. The $\overline{\text{CONVST}}$ line is brought low to initiate a conversion and remains low until after the end of conversion. If $\overline{\text{CONVST}}$ goes high and low again while BUSY is high, the conversion is restarted. Once the BUSY line goes from a high to a low, the $\overline{\text{CONVST}}$ line has its status checked and, if low, the part enters sleep mode.

The device wakes up again on the rising edge of the $\overline{\text{CONVST}}$ signal. There is a wake-up time of typically 1 µs after the rising edge of $\overline{\text{CONVST}}$ before the BUSY line can go high to indicate start of conversion. BUSY will only go high once $\overline{\text{CONVST}}$ goes low. The $\overline{\text{CONVST}}$ line can go from a high to a low during this wake-up time, but the conversion will still not be initiated until after the 1 µs wake-up time. Superior power performance can be achieved in this mode of operation by waking up the AD7470 and AD7472 only to carry out a conversion.

Burst Mode

Burst mode on the AD7470/AD7472 is a subsection of Mode 1 and Mode 2, the clock is noncontinuous. Figure 12 shows how the ADC works in burst mode for Mode 2. The clock needs only to be switched on during conversion, minimum of 12 clock cycles for the AD7470 and 14 clock cycles for the AD7472. As the clock is off during nonconverting intervals, system power is saved. The BUSY signal can be used to gate the CLK IN pulses. The ADC does not begin the conversion process until the first CLK IN rising edge after BUSY goes high. The clock needs to start less than two clock cycles away from the $\overline{\text{CONVST}}$ active edge otherwise INL deteriorates; e.g., if the clock frequency is 28 MHz the clock must start within 71.4 ns of $\overline{\text{CONVST}}$ going low. In Figure 12 the A-D converter section is put into sleep mode once conversion is completed and on the rising edge of $\overline{\text{CONVST}}$ it is woken up again; the user must be wary of the wake-up time as this will reduce the sampling rate of the ADC.

V_{DRIVE}

The V_{DRIVE} pin is used as the voltage supply to the output drivers and is a separate supply from AV_{DD} and DV_{DD}. The purpose of using a separate supply for the output drivers is that the user can vary the output high voltage, V_{OH}, from the V_{DD} supply to the AD7470/AD7472. For example, if AV_{DD} and DV_{DD} is using a 5 V supply, the V_{DRIVE} pin can be powered from a 3 V supply. The ADC has better dynamic performance at 5 V than at 3 V, so operating the part at 5 V, while still being able to interface to 3 V parts, pushes the AD7470/AD7472 to the top bracket of high performance 10-bit/12-bit A/Ds. Of course, the ADC can have its V_{DRIVE} and DV_{DD} pins connected together and be powered from a 3 V or 5 V supply.

All outputs are powered from V_{DRIVE}. These are all the data out pins and the BUSY pin. The $\overline{\text{CONVST}}$, $\overline{\text{CS}}$, $\overline{\text{RD}}$ and CLK IN signals are related to the DV_{DD} voltage.

POWER-UP

It is recommended that the user performs a dummy conversion after power-up, as the first conversion result could be incorrect. This also ensures that the parts is in the correct mode of operation. The recommended power-up sequence is as follows:

1 > GND	4 > Digital Inputs
2 > V_{DD}	5 > REF IN
3 > V_{DRIVE}	6 > V_{IN}

Power vs. Throughput

The two modes of operation for the AD7470 and AD7472 will produce different power versus throughput performances, Mode 1 and Mode 2; see Operating Modes section of the data sheet for more detailed descriptions of these modes. Mode 2 is the Sleep Mode of the part and it achieves the optimum power performance.

Mode 1

Figure 14 shows the AD7472 conversion sequence in Mode 1 using a throughput rate of 500 kSPS and a clock frequency of 26 MHz. At 5 V supply the current consumption for the part when converting is 2 mA and the quiescent current is 650 µA. The conversion time of 531.66 ns contributes 2.658 mW to the overall power dissipation in the following way:

$$(531.66\ ns/2\ \mu s) \times (5 \times 2\ \ mA) = 2.658\ mW$$

The contribution to the total power dissipated by the remaining 1.468 µs of the cycle is 2.38 mW.

$$(1.468\ \mu s/2\ \mu s) \times (5 \times 650\ \mu A) = 2.38\ mW$$

Thus the power dissipated during each cycle is:

$$2.658\ mW + 2.38\ mW = 5.038\ mW$$

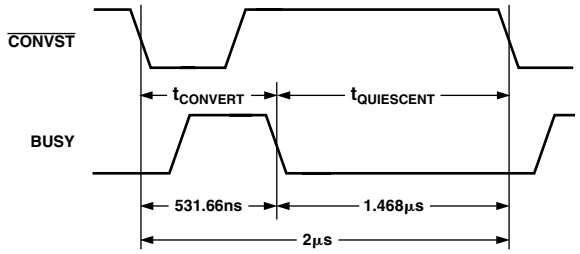

Figure 14. Mode 1 Power Dissipation

Mode 2

Figure 15 shows the AD7472 conversion sequence in Mode 2 using a throughput rate of 500 kSPS and a clock frequency of 26 MHz. At 5 V supply the current consumption for the part when converting is 2 mA, while the sleep current is 1 µA max. The power dissipated during this power-down is negligible and is thus not worth considering in the total power figure. During the wake-up phase, the AD7472 will draw 650 µA. Overall power dissipated is:

$$\left(531.66\ ns / 2\ \mu s\right) \times \left(5 \times 2\ mA\right) + \left(1\ \mu s / 2\ \mu s\right) \times \left(5 \times 650\ \mu A\right) = 4.283\ mW$$

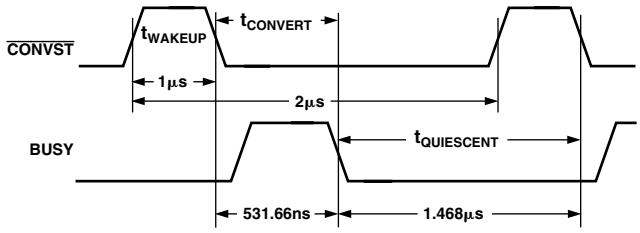

Figure 15. Mode 2 Power Dissipation

Figure 16 and Figure 17 show a typical graphical representation of Power vs. Throughput for the AD7472 when in (a) Mode 1 @ 5 V and 3 V and Mode 2 @ 5 V and 3 V.

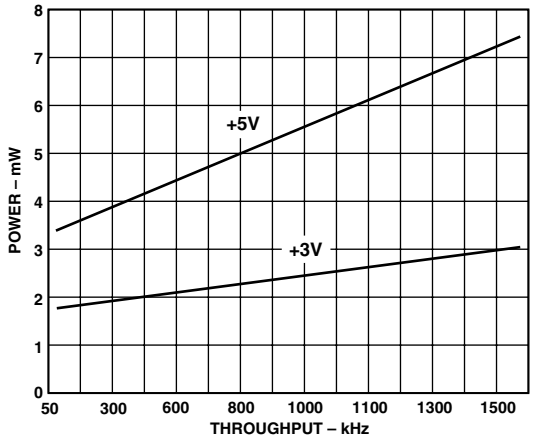

Figure 16. Power vs. Throughput (Mode 1 @ 5 V and 3 V)

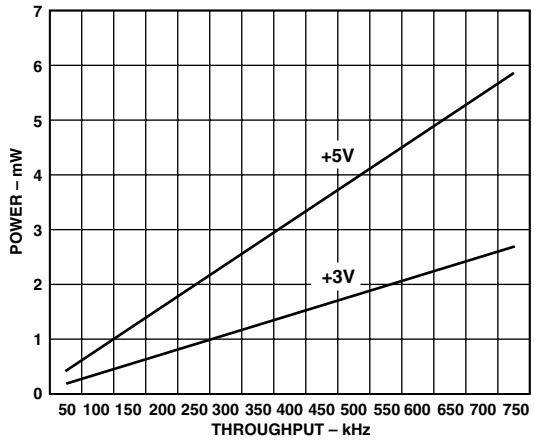

Figure 17. Power vs. Throughput (Mode 2 @ 5 V and 3 V)

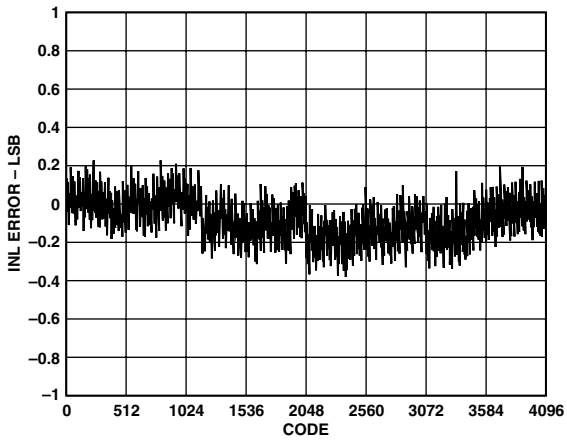

Figure 18. Typical INL for 2.75 V @ +25°C

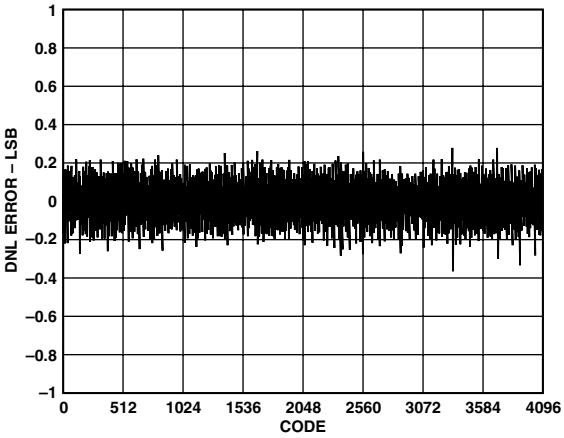

Figure 19. Typical DNL for 2.75 V @ +25°C

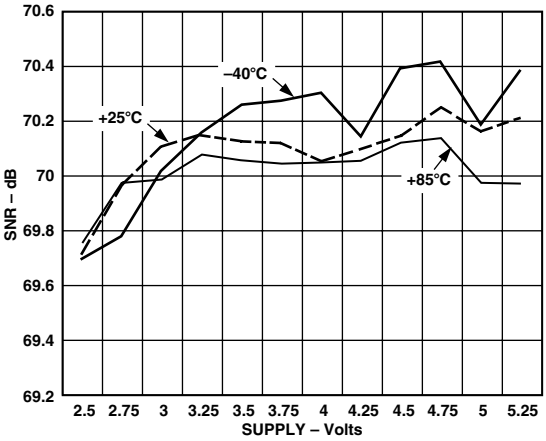

Figure 22. Typical SNR vs. Supply

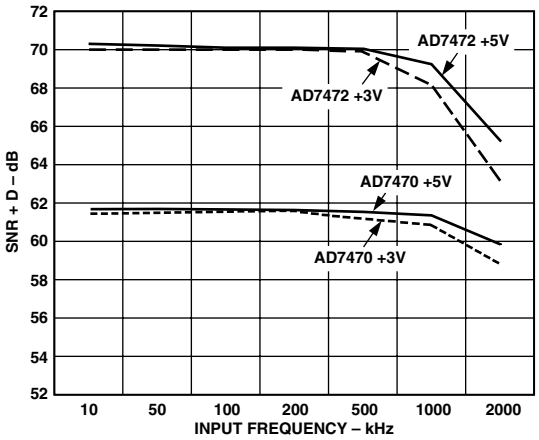

Figure 20. Typical SNR+D vs. Input Tone

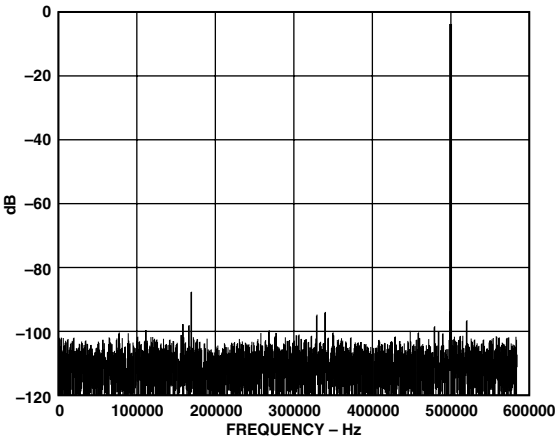

Figure 23. Typical SNR @ 500 kHz Input Tone

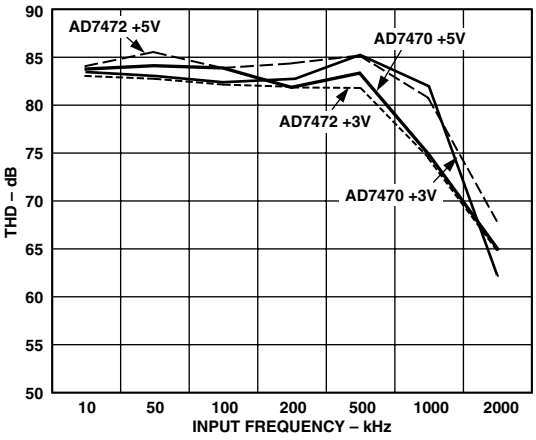

Figure 21. Typical THD vs. Input Tone

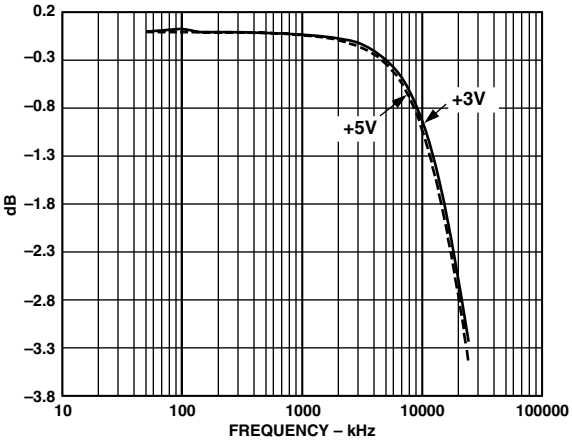

Figure 24. Typical Bandwidth

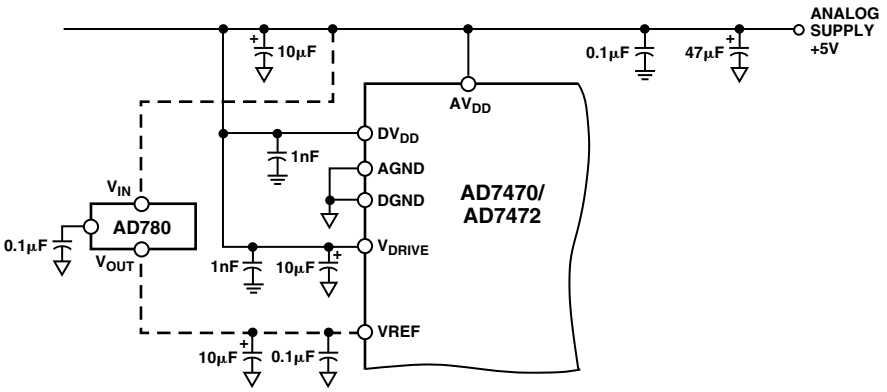

Figure 25. Decoupling Circuit

GROUNDING AND LAYOUT

The analog and digital power supplies are independent and separately pinned out to minimize coupling between analog and digital sections within the device. To complement the excellent noise performance of the AD7470/AD7472 it is imperative that care be given to the PCB layout. Figure 25 shows a recommended connection diagram for the AD7470/AD7472.

All of the AD7470/AD7472 ground pins should be soldered directly to a ground plane to minimize series inductance. The AV_{DD}, DV_{DD} and V_{DRIVE} pins should be decoupled to both the analog and digital ground planes. The large value capacitors will decouple low frequency noise to analog ground, the small value capacitors will decouple high frequency noise to digital ground. All digital circuitry power pins should be decoupled to the digital ground plane. The use of ground planes can physically separate sensitive analog components from the noisy digital system. The two ground planes should be joined in *only* one place and should not overlap so as to minimize capacitive coupling between them. If the AD7470/AD7472 is in a system where multiple devices require AGND to DGND connections, the connection should still be made at one point only, a star ground point, which should be established as close as possible to the AD7470/AD7472.

Noise can be minimized by applying some simple rules to the PCB layout: analog signals should be kept away from digital signals; fast switching signals like clocks should be shielded with digital ground to avoid radiating noise to other sections of the board and clock signals should never be run near the analog inputs; avoid running digital lines under the device as these will couple noise onto the die; the power supply lines to the AD7470/AD7472 should use as large a trace as possible to provide a low impedance path and reduce the effects of glitches on the power supply line; avoid crossover of digital and analog signals and place traces that are on opposite sides of the board at right angles to each other.

Noise to the analog power line can be further reduced by use of multiple decoupling capacitors as shown in Figure 25. Decoupling capacitors should be placed directly at the power inlet to the PCB and also as close as possible to the power pins of the AD7470/AD7472. The same decoupling method should be used on other ICs on the PCB, with the capacitor leads as short as possible to minimize lead inductance.

POWER SUPPLIES

Separate power supplies for AV_{DD} and DV_{DD} are desirable but if necessary DV_{DD} may share its power connection to AV_{DD}. The digital supply (DV_{DD}) must not exceed the analog supply (AV_{DD}) by more than 0.3 V in normal operation.

MICROPROCESSOR INTERFACING

AD7470/AD7472 to ADSP-2185 Interface

Figure 26 shows a typical interface between the AD7470/AD7472 and the ADSP-2185. The ADSP-2185 processor can be used in one of two memory modes, Full Memory Mode and Host Mode. The Mode C pin determines in which mode the processor works. The interface in Figure 26 is set up to have the processor working in Full Memory Mode, which allows full external addressing capabilities.

When the AD7470/AD7472 has finished converting, the BUSY line requests an interrupt through the $\overline{IRQ2}$ pin. The $\overline{IRQ2}$ interrupt has to be set up in the interrupt control register as edge-sensitive. The DMS (Data Memory Select) pin latches in the address of the A/D into the address decoder. The read operation is thus started.

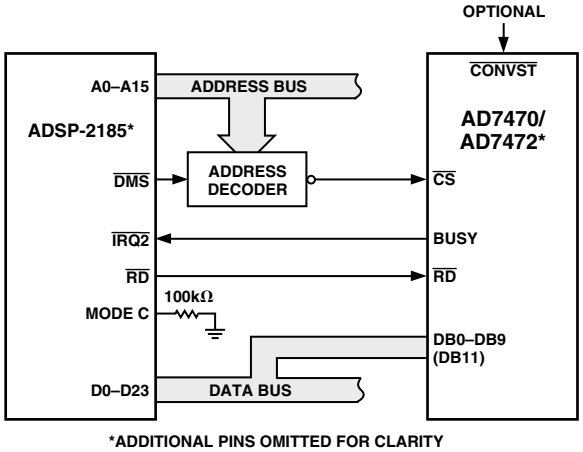

Figure 26. Interfacing to the ADSP-2185

AD7470/AD7472 to ADSP-21065 Interface

Figure 27 shows a typical interface between the AD7470/AD7472 and the ADSP-21065L SHARC® processor. This interface is an example of one of three DMA handshake modes. The $\overline{MS_X}$

SHARC is a registered trademark of Analog Devices, Inc.

control line is actually three memory select lines. Internal $ADDR_{25-24}$ are decoded into $\overline{MS}_{3-0}$, these lines are then asserted as chip selects. The $\overline{DMAR}_1$ (DMA Request 1) is used in this setup as the interrupt to signal end of conversion. The rest of the interface is standard handshaking operation.

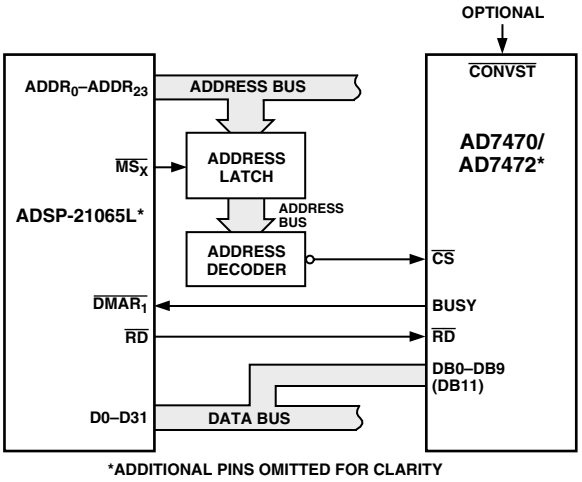

Figure 27. Interfacing to ADSP-21065L

AD7470/AD7472 to TMS320C25 Interface

Figure 28 shows an interface between the AD7470/AD7472 and the TMS320C25. The $\overline{CONVST}$ signal can be applied from the TMS320C25 or from an external source. The BUSY line interrupts the digital signal processor when conversion is completed. The TMS320C25 does not have a separate $\overline{RD}$ output to drive the AD7470/AD7472 $\overline{RD}$ input directly. This has to be generated from the processor $\overline{STRB}$ and R/$\overline{W}$ outputs with the addition of some glue logic. The $\overline{RD}$ signal is OR-gated with the $\overline{MSC}$ signal to provide the WAIT state required in the read cycle for correct interface timing. The following instruction is used to read the conversion from the AD7470/AD7472:

IN D,ADC

where *D* is Data Memory address and the *ADC* is the AD7470/AD7472 address. The read operation must not be attempted during conversion.

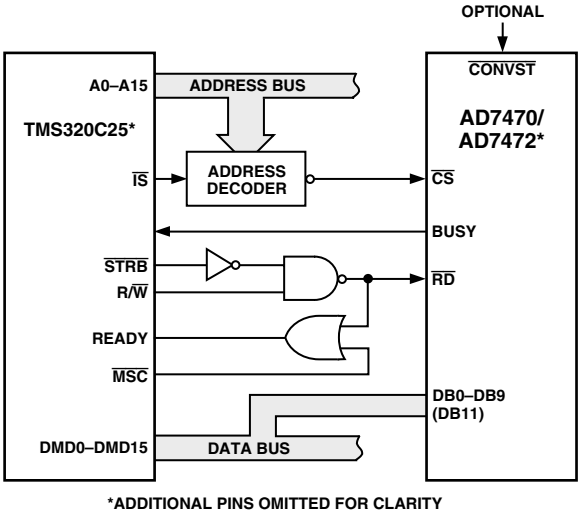

Figure 28. Interfacing to the TMS320C25

AD7470/AD7472 to PIC17C4x Interface

Figure 29 shows a typical parallel interface between the AD7470/AD7472 and PIC17C42/43/44. The microcontroller sees the A/D as another memory device with its own specific memory address on the memory map. The $\overline{CONVST}$ signal can either be controlled by the microcontroller or an external source. The BUSY signal provides an interrupt request to the microcontroller when a conversion ends. The INT pin on the PIC17C42/43/44 must be configured to be active on the negative edge. PORTC and PORTD of the microcontroller are bidirectional and used to address the AD7470/AD7472 and also to read in the 10-bit (AD7470) or 12-bit (AD7472) data. The $\overline{OE}$ pin on the PIC can be used to enable the output buffers on the AD7470/AD7472 and preform a read operation.

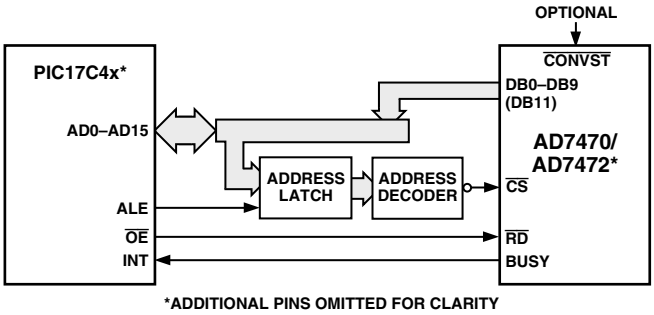

Figure 29. Interfacing to the PIC17C4x

AD7470/AD7472 to 80C186 Interface

Figure 30 shows the AD7470/AD7472 interfaced to the 80C186 microprocessor. The 80C186 DMA controller provides two independent high speed DMA channels where data transfer can occur between memory and I/O spaces. (The AD7470/AD7472 occupies one of these I/O spaces.) Each data transfer consumes two bus cycles, one cycle to fetch data and the other to store data.

After the AD7470/AD7472 has finished conversion, the BUSY line generates a DMA request to Channel 1 (DRQ1). As a result of the interrupt, the processor performs a DMA READ operation which also resets the interrupt latch. Sufficient priority must be assigned to the DMA channel to ensure that the DMA request will be serviced before the completion of the next conversion. This configuration can be used with 6 MHz and 8 MHz 80C186 processors.

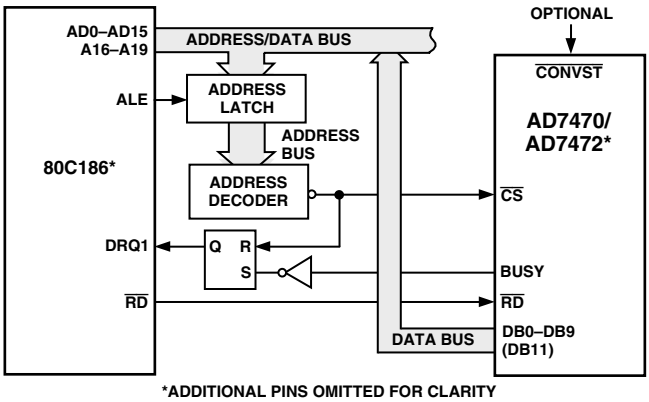

Figure 30. Interfacing to the 80C186

OUTLINE DIMENSIONS

Dimensions shown in inches and (mm).

24-Lead SOIC
(R-24)

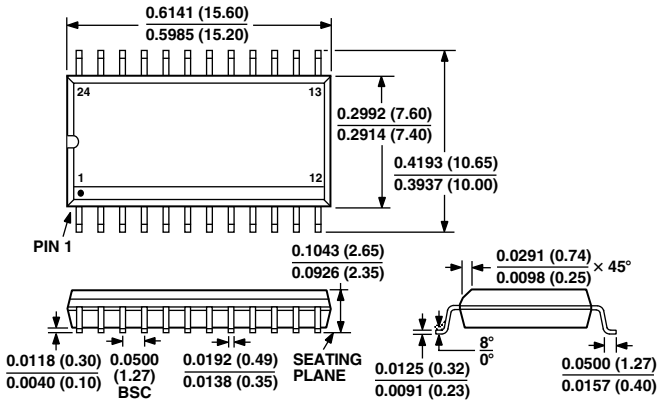

24-Lead TSSOP
(RU-24)

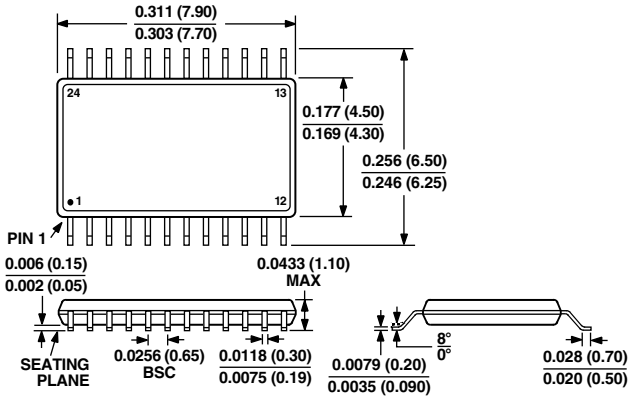

C3600–0–3/00 (rev. A)

PRINTED IN U.S.A.