查询TEF6892H供应商 捷多邦，专业PCB打样工厂，24小时加急出货

INTEGRATED CIRCUITS

DATA SHEET

TEF6892H
Car radio integrated signal processor

Product specification 2003 Oct 21

找PDF 维库一下 pdf.dzsc.com

Philips Semiconductors

PHILIPS

CONTENTS

1 FEATURES
1.1 General
1.2 I²C-bus
1.3 Stereo decoder
1.4 Noise blanking
1.5 Weak signal processing
1.6 RDS demodulator and decoder
1.7 Tone/volume part
2 GENERAL DESCRIPTION
3 ORDERING INFORMATION
4 QUICK REFERENCE DATA
5 BLOCK DIAGRAM
6 PINNING
7 FUNCTIONAL DESCRIPTION
7.1 Stereo decoder
7.2 FM and AM noise blanker
7.3 High cut control and de-emphasis
7.4 Noise detector
7.4.1 FM noise detector
7.4.2 AM noise detector
7.5 Multipath/weak signal processing
7.6 Tone/volume control
7.6.1 Input selector
7.6.2 Loudness
7.6.3 Volume/balance
7.6.4 Treble
7.6.5 Bass
7.6.6 Fader/mute
7.6.7 Beep generator and NAV input with output mixer
7.7 RDS demodulator and decoder
7.7.1 RDS demodulator
7.7.2 RDS decoder
8 LIMITING VALUES
9 THERMAL CHARACTERISTICS
10 CHARACTERISTICS
11 I²C-BUS PROTOCOL
11.1 Read mode
11.1.1 Data byte 1; STATUS
11.1.2 Data byte 2; LEVEL
11.1.3 Data byte 3; USN and WAM
11.1.4 Data byte 4; RDS STATUS
11.1.5 Data byte 5; RDS LDATM
11.1.6 Data byte 6; RDS LDATL
11.1.7 Data byte 7; RDS PDATM
11.1.8 Data byte 8; RDS PDATL
11.1.9 Data byte 9; RDS COUNT
11.1.10 Data byte 10; RDS PBIN
11.2 Write mode
11.2.1 Subaddress 0H; RDS SET A
11.2.2 Subaddress 1H; RDS SET B
11.2.3 Subaddress 2H; RDSCLK
11.2.4 Subaddress 3H; RDS CONTROL
11.2.5 Subaddress 4H; CONTROL
11.2.6 Subaddress 5H; CSALIGN
11.2.7 Subaddress 6H; MULTIPATH
11.2.8 Subaddress 7H; SNC
11.2.9 Subaddress 8H; HIGHCUT
11.2.10 Subaddress 9H; SOFTMUTE
11.2.11 Subaddress AH; RADIO
11.2.12 Subaddress BH; INPUT and ASI
11.2.13 Subaddress CH; LOUDNESS
11.2.14 Subaddress DH; VOLUME
11.2.15 Subaddress EH; TREBLE
11.2.16 Subaddress FH; BASS
11.2.17 Subaddress 10H; FADER
11.2.18 Subaddress 11H; BALANCE
11.2.19 Subaddress 12H; MIX
11.2.20 Subaddress 13H; BEEP
11.2.21 Subaddress 1FH; AUTOGATE
12 TEST AND APPLICATION INFORMATION
13 PACKAGE OUTLINE
14 SOLDERING
14.1 Introduction to soldering surface mount packages
14.2 Reflow soldering
14.3 Wave soldering
14.4 Manual soldering
14.5 Suitability of surface mount IC packages for wave and reflow soldering methods
15 DATA SHEET STATUS
16 DEFINITIONS
17 DISCLAIMERS
18 PURCHASE OF PHILIPS I²C COMPONENTS

1 FEATURES

1.1 General

- High integration
- No external components except coupling capacitors for signal inputs and outputs
- QFP44 package with small Printed-Circuit Board (PCB) footprint.

1.2 I²C-bus

- Fast mode 400 kHz I²C-bus, interfaces to logic levels ranging from 2.5 to 5 V
- Gated I²C-bus loop through to tuner IC
  - Eases PCB layout (crosstalk)
  - Allows mix of 400 kHz and 100 kHz busses
  - Low bus load reduces crosstalk
  - Buffered I/O circuit
  - Supply voltage shift between both buses allowed.
- Shortgate function offers easy control with automatic gating of a single transmission; suited for TEA684x
- Autogate function offers transparent microcontroller control with automatic on/off gating (programmable address).

1.3 Stereo decoder

- FM stereo decoder with high immunity to birdy noise and excellent pilot cancellation
- Integrated IF roll-off correction controlled via I²C-bus
- De-emphasis selectable between 75 and 50 µs via I²C-bus.

1.4 Noise blanking

- New fully integrated AM noise blanker with excellent performance
- Fully integrated FM noise blanker with superior performance.

1.5 Weak signal processing

- FM weak signal processing with detectors for RF level, Ultrasonic Noise (USN) and Wideband AM (WAM) information
- AM weak signal processing with detectors for level information
- AM processing with soft mute and High Cut Control (HCC)
- FM processing with soft mute, stereo blend and HCC
- Setting of the sensitivity of the detectors and start and slope of the control functions via I²C-bus
- Weather band de-emphasis
- Level, USN and WAM read-out via I²C-bus (signal quality detectors)
- Full support of tuner AF update functions with TEA684x tuner ICs, FM audio processing holds the detectors for the FM weak signal processing in their present state during RDS updating.

1.6 RDS demodulator and decoder

- RDS/RBDS demodulator uses TEA684x reference frequency, no external crystal necessary
- RDS/RBDS decoder with memory for two RDS data blocks provides block synchronization, error correction and flywheel function; block data and status information are available via the I²C-bus.

1.7 Tone/volume part

- Input selector for four inputs:
  - Two external stereo inputs (CD and TAPE)
  - One mono input (PHONE)
  - One internal stereo input (AM or FM).
- Integrated tone control and audio filters without external components
- Volume control from +20 to –79 dB in 1 dB steps; programmable 20 dB loudness control included
- Programmable loudness control with bass boost or as bass and treble boost
- Treble control from –14 to +14 dB in 2 dB steps
- Bass control from –14 to +14 dB in 2 dB steps with selectable characteristics
- Good undistorted performance for any step size, including mute
- Audio Step Interpolation (ASI) available for the following audio controls:
  - Mute
  - Loudness
  - Volume/balance
  - Bass
  - Fader.
- ASI also realizes Alternative Frequency (AF) mute for inaudible RDS update
- Integrated beep generator
- Navigation (NAV) input
- Output mixer circuit for beep or NAV signal at output stages.

2 GENERAL DESCRIPTION

The TEF6892H is a monolithic BiMOS integrated circuit comprising the stereo decoder function, weak signal processing and ignition noise blanking facility for AM and FM combined with input selector and tone/volume control for AM and FM car radio applications. The RDS/RBDS demodulator function and the RDS/RBDS decoder function are included. The device operates with a supply voltage of 8 to 9 V.

3 ORDERING INFORMATION

TYPE NUMBER	PACKAGE		
	NAME	DESCRIPTION	VERSION
TEF6892H	QFP44	plastic quad flat package; 44 leads (lead length 1.3 mm); body 10 × 10 × 1.75 mm	SOT307-2

4 QUICK REFERENCE DATA

SYMBOL	PARAMETER	CONDITIONS	MIN.	TYP.	MAX.	UNIT
V_{CC}	supply voltage		8.0	8.5	9.0	V
I_{CC}	supply current	normal mode	–	28	–	mA
		standby RDS; audio on	–	24	–	mA
		standby audio; RDS on	–	19	–	mA
		standby	–	15	–	mA
Stereo decoder path						
α_{cs}	channel separation	f_{FMMPX} = 1 kHz	40	–	–	dB
S/N	signal-to-noise ratio	f_{FMMPX} = 20 Hz to 15 kHz	75	–	–	dB
THD	total harmonic distortion	FM mode; f_{FMMPX} = 1 kHz	–	–	0.3	%
Tone/volume control						
$V_{i(max)(rms)}$	maximum input voltage level at pins TAPEL, TAPER, CDL, CDR, CDCM, PHONE and PHCM (RMS value)	THD = 0.1%; G_{vol} = –6 dB	2	–	–	V
$V_{i(NAV)(max)(rms)}$	maximum input voltage level at pin NAV (RMS value)	THD = 1%; f_{NAV} = 1 kHz	0.3	–	–	V
THD	total harmonic distortion	TAPE and CD inputs; f_{audio} = 20 Hz to 20 kHz; V_i = 1 V (RMS)	–	0.01	0.1	%
G_{vol}	volume/balance gain control	maximum setting	–	20	–	dB
		minimum setting	–	–59	–	dB
$G_{step(vol)}$	step resolution gain (volume)		–	1	–	dB
$G_{loudness}$	loudness gain control	$f_{loudness(low)}$ = 50 Hz; high boost on				
		maximum setting; 1 kHz tone	–	0	–	dB
		minimum setting; 1 kHz tone	–	–20	–	dB
G_{treble}	treble gain control	maximum setting	–	14	–	dB
		minimum setting	–	–14	–	dB
$G_{step(treble)}$	step resolution gain (treble)		–	2	–	dB
G_{bass}	bass gain control	maximum setting; symmetrical boost	–	14	–	dB
		minimum setting; asymmetrical cut	–	–14	–	dB
$G_{step(bass)}$	step resolution gain (bass)		–	2	–	dB

5 BLOCK DIAGRAM

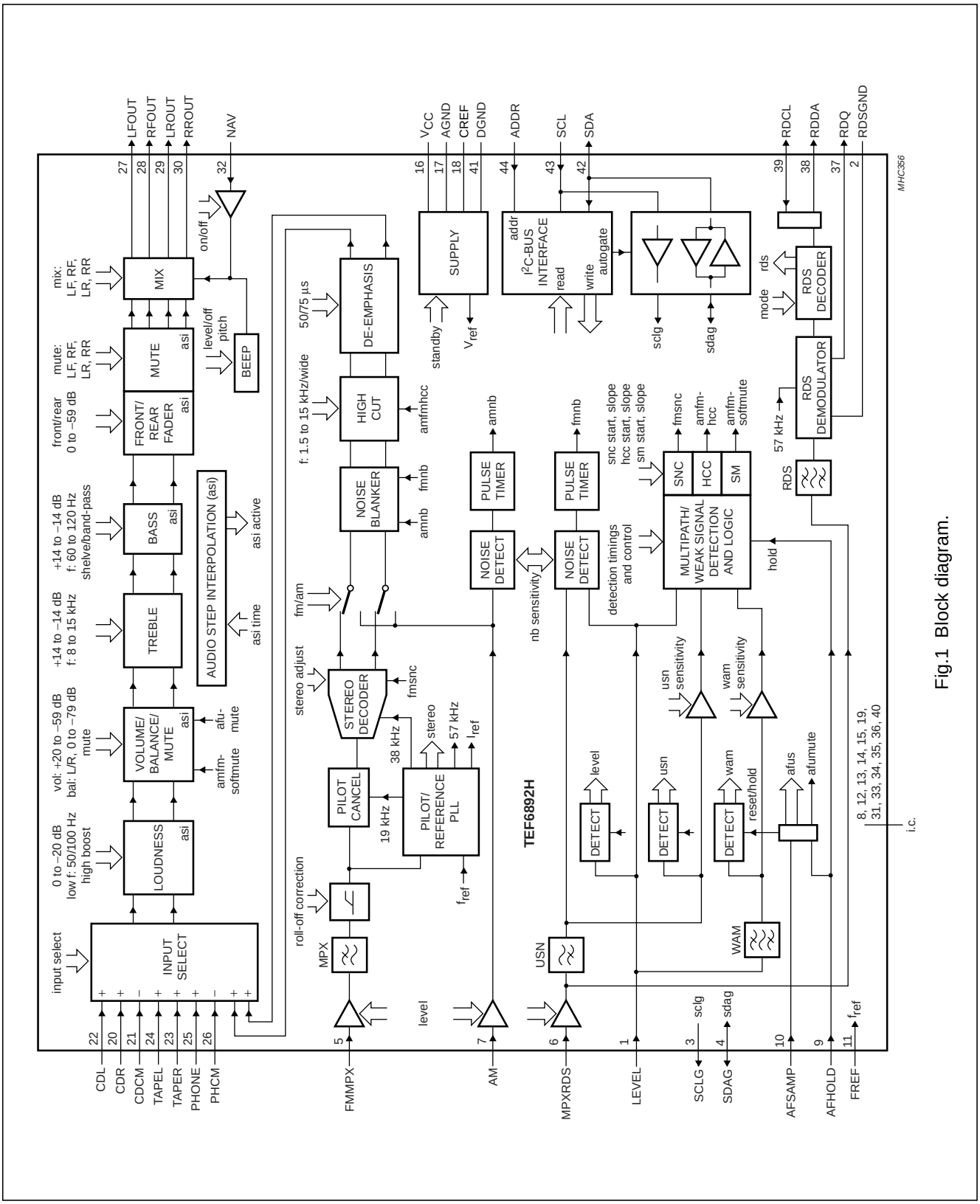

Fig.1 Block diagram.

6 PINNING

SYMBOL	PIN	DESCRIPTION
LEVEL	1	level detector input
RDSGND	2	RDS ground
SCLG	3	gated I^2C-bus clock port
SDAG	4	gated I^2C-bus data port
FMMPX	5	FM-MPX input for audio processing
MPXRDS	6	FM-MPX input for weak signal processing, noise blanker and RDS demodulator
AM	7	AM audio input
i.c.	8	internally connected
AFHOLD	9	FM weak signal processing hold input
AFSAMP	10	trigger signal input for quality measurement
FREF	11	reference frequency input 75.4 kHz
i.c.	12	internally connected
i.c.	13	internally connected
i.c.	14	internally connected
i.c.	15	internally connected
V_{CC}	16	supply voltage
AGND	17	analog ground
CREF	18	reference voltage capacitor
i.c.	19	internally connected
CDR	20	CD right input
CDCM	21	CD common input
CDL	22	CD left input
TAPER	23	tape right input
TAPEL	24	tape left input
PHONE	25	phone input
PHCM	26	phone common input
LFOUT	27	left front output
RFOUT	28	right front output
LROUT	29	left rear output
RROUT	30	right rear output
i.c.	31	internally connected
NAV	32	audio input for navigation voice signal
i.c.	33	internally connected
i.c.	34	internally connected
i.c.	35	internally connected
i.c.	36	internally connected
RDQ	37	RDS/RBDS demodulator quality information output
RDDA	38	RDS/RBDS decoder data available or RDS/RBDS demodulator data output
RDCL	39	RDS/RBDS demodulator clock input or output
i.c.	40	internally connected

SYMBOL	PIN	DESCRIPTION
DGND	41	digital ground
SDA	42	I^2C-bus data input or output
SCL	43	I^2C-bus clock input
ADDR	44	address select input

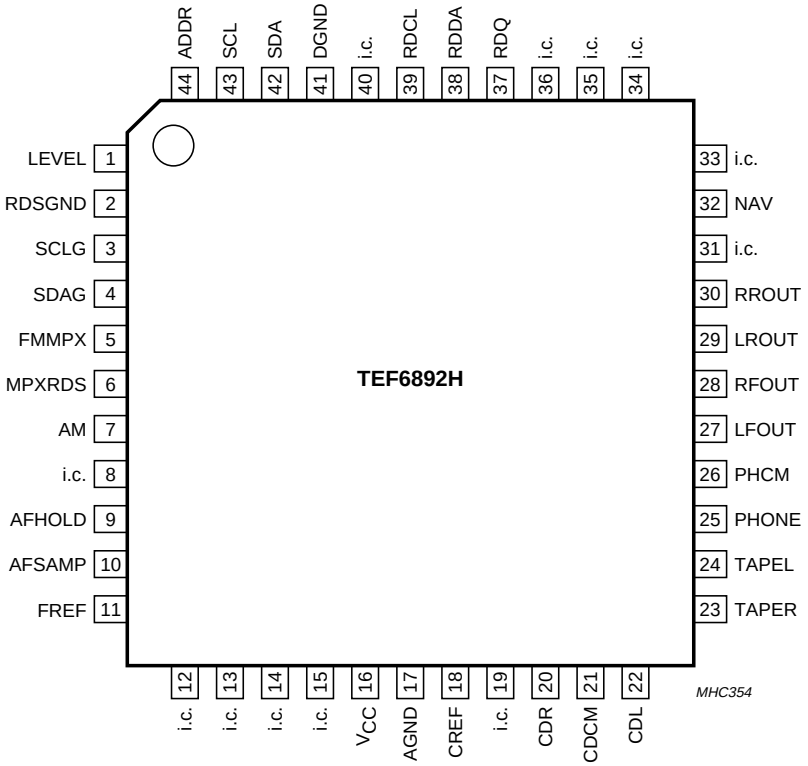

Fig.2 Pin configuration.

7 FUNCTIONAL DESCRIPTION

7.1 Stereo decoder

The FMMPX input is the input for the MPX signal from the tuner. The input gain can be selected in three settings to match the input to the RF front-end circuit. A fourth setting is used for weather band mode, which may require a gain of 23.5 dB.

A low-pass filter provides the necessary signal delay for FM noise blanking and suppression of high frequency interferences into the stereo decoder input. The output signal of this filter is fed to the roll-off correction circuit. This circuit compensates the frequency response caused by the low-pass characteristic of the tuner circuit with its IF filters. The roll-off correction circuit is adjustable in four settings to compensate different frequency responses of the tuner part.

The MPX signal is decoded in the stereo decoder part. A PLL is used for the regeneration of the 38 kHz subcarrier. The fully integrated oscillator is adjusted by a digital auxiliary PLL into the capture range of the main PLL. The auxiliary PLL needs an external reference frequency (75.4 kHz) which is provided by the tuner ICs of the NICE family (TEA684x). The required 19 and 38 kHz signals are generated by division of the oscillator output signal in a logic circuit. The 19 kHz quadrature phase signal is fed to the 19 kHz phase detector, where it is compared with the incoming pilot tone. The DC output signal of the phase detector controls the oscillator (PLL).

The pilot detector is driven by an internally generated in-phase 19 kHz signal. Its pilot dependent voltage activates the stereo indicator bit and sets the stereo decoder to stereo mode. The same voltage is used to control the amplitude of an anti-phase internally generated 19 kHz signal. In the pilot canceller, the pilot tone is compensated by this anti-phase 19 kHz signal.

The signal is then decoded in the decoder part. The side signal is demodulated and combined with the main signal to the left and right audio channels. A fine adjustment of the roll-off compensation is done by adjusting the gain of the L-R signal in 16 steps. A smooth mono to stereo takeover is achieved by controlling the efficiency of the matrix by the FMSNC signal from the weak signal processing block.

7.2 FM and AM noise blanker

The FM/AM switch selects the output signal of the stereo decoder (FM mode) or the signal from the AM input for the noise blanker block. In FM mode the noise blanker operates as a sample and hold circuit, while in AM mode it mutes the audio signal during the interference pulse. The blanking pulse which triggers the noise blanker is generated in the noise detector block.

7.3 High cut control and de-emphasis

The High Cut Control (HCC) part is a low-pass filter circuit with eight different static roll-off response curves. The cut-off frequencies of these filter curves can be selected by I^2C-bus to match different application requirements. The HCC circuit also provides a dynamic control of the filter response. This function is controlled by the AMFMHCC signal from the weak signal processing.

The signal passes the de-emphasis block with two de-emphasis values (50 and 75 μs), which can be selected via I^2C-bus, and is fed to the input selector.

7.4 Noise detector

7.4.1 FM NOISE DETECTOR

The trigger signal for the FM noise detector is derived from the MPXRDS input signal and the LEVEL signal. In the MPXRDS path a four pole high-pass filter (100 kHz) separates the noise spikes from the wanted MPX signal. Another detector circuit triggers on noise spikes on the level voltage. The signals of both detectors are combined to achieve a reliable trigger signal for the noise blanker. AGC circuits in the detector part control the gain depending on the average noise in the signals to prevent false triggering. The sensitivity of the triggering from the MPXRDS signal can be adjusted in four steps, the triggering from the LEVEL signal in three steps.

7.4.2 AM NOISE DETECTOR

The trigger pulse for the AM noise blanker is derived from the AM audio signal. The noise spikes are detected by a slew rate detector, which detects excessive slew rates which do not occur in normal audio signals. The sensitivity of the AM noise blanker can be adjusted in four steps.

7.5 Multipath/weak signal processing

The multipath (MPH)/weak signal processing block detects quality degradations in the incoming FM signal and controls the processing of the audio signal accordingly. There are three different quality criteria:

- The average value of the level voltage
- The AM components on the level voltage [Wideband AM (WAM)]
- The high frequency components in the MPX signal [Ultrasonic Noise (USN)].

The level voltage is converted to a digital value by an 8-bit analog-to-digital converter. A digital filter circuit (WAM filter) derives the wideband AM components from the level signal. The high frequency components in the MPX signals are measured with an analog-to-digital converter (USN ADC) at the output of the 100 kHz high-pass filter in the MPXRDS path.

The values of these three signals are externally available via the I^2C-bus.

In the weak signal processing block the three digital signals are combined in a specific way and used for the generation of control signals for soft mute, stereo blend (stereo noise control, FMSNC) and high cut control (AMFMHCC).

The sensitivities of the detector circuits (WAM and USN) are adjustable via the I^2C-bus.

Also the start values and the slopes of the control functions soft mute, stereo blend and high cut control can be set via the I^2C-bus.

Soft mute, stereo blend and HCC are set on hold during the AF updating (quality check of alternative frequency) to avoid an influence of the tuning procedure on the weak signal processing conditions.

In AM mode the soft mute and high cut control are available too, the weak signal block is controlled by the average value of the level voltage.

7.6 Tone/volume control

The tone/volume control part consists of the following stages:

- Input selector
- Loudness control
- Volume/balance control with muting
- Treble control
- Bass control
- Fader and output mute
- Beep generator
- NAV input
- Output mixer.

The settings of all stages are controlled via the I^2C-bus.

The stages input selector, loudness, volume/balance, bass, and fader/output mute include the Audio Step Interpolation (ASI) function. This minimizes pops by smoothing the transitions in the audio signal during the switching of the controls. The transition time of the ASI function is programmable by I^2C-bus in four steps.

7.6.1 Input selector

The input selector selects one of four input sources:

- Two external stereo inputs (CD and TAPE)
- One external mono input (PHONE)
- One internal stereo input (AM/FM).

7.6.2 Loudness

The output of the input selector is fed into the loudness circuit. Four different loudness curves can be selected via the I^2C-bus. The control range is between 0 and –20 dB with a step size of 1 dB; see Figs 16 to 19.

7.6.3 Volume/balance

The volume/balance control is used for volume setting and also for balance adjustment. The control range of the volume/balance control is between +20 and –59 dB in steps of 1 dB.

The combination of loudness and volume/balance realizes an overall control range of +20 to –79 dB.

7.6.4 Treble

The signal is then fed to the treble control stage. The control range is between +14 and –14 dB in steps of 2 dB. Figure 20 shows the control characteristic. Four different filter frequencies can be selected.

7.6.5 Bass

The characteristic of the bass attenuation curves can be set to shelve or band-pass. Four different frequencies can be selected as centre frequency of the band-pass curve. Figures 21 and 22 show the bass curves with a band-pass filter frequency of 60 Hz. The control range is between +14 and –14 dB in steps of 2 dB.

7.6.6 Fader/mute

The four fader/mute blocks are located at the end of the tone/volume chain. The control range of these attenuators is 0 to –59 dB. The step size is:

- 1 dB between 0 and –15 dB
- 2.5 dB between –15 and –45 dB
- 3 dB between –45 and –51 dB
- 4 dB between –51 and –59 dB.

7.6.7 Beep generator and NAV input with output mixer

The output mixer circuit can add an additional audio signal to any of the four outputs together with the main signal or instead of the main signal.

The additional signal can be generated internally by the beep generator with four different audio frequencies or applied to the NAV input, for instance a navigation voice signal.

7.7 RDS demodulator and decoder

7.7.1 RDS demodulator

The RDS demodulator recovers and regenerates the continuously transmitted RDS or RBDS data stream of the multiplex signal (MPXRDS) and provides the signals clock (RDCL), data (RDDA) and quality (RDQ) for external use or further processing by the integrated RDS decoder. The RDS demodulator uses the reference frequency (75.4 kHz) from the tuner IC and does not need a crystal.

7.7.2 RDS decoder

The RDS decoder provides block synchronization, error correction and flywheel function for reliable extraction of RDS or RBDS block data. Different modes of operation can be selected to fit different application requirements. Availability of new data is signalled by read bit RDAV and output pin RDDA. Up to two blocks of data and status information are available via the I^2C-bus in a single transmission.

8 LIMITING VALUES

In accordance with the Absolute Maximum Rating System (IEC 60134).

SYMBOL	PARAMETER	CONDITIONS	MIN.	MAX.	UNIT
V_{CC}	supply voltage		–0.3	+10	V
V_i	input voltage for any pin		–0.3	V_{CC} + 0.3	V
T_{stg}	storage temperature		–65	+150	°C
T_{amb}	ambient temperature		–40	+85	°C
V_{esd}	electrostatic discharge voltage	note 1	–200	+200	V
		note 2	–2000	+2000	V

Notes

1. Machine model (R = 0 Ω, C = 200 pF).
2. Human body model (R = 1.5 kΩ, C = 100 pF).

9 THERMAL CHARACTERISTICS

SYMBOL	PARAMETER	CONDITIONS	VALUE	UNIT
$R_{th(j-a)}$	thermal resistance from junction to ambient	in free air	61	K/W

10 CHARACTERISTICS

FM part: f_{FMMPX} = 1 kHz at V_{FMMPX} = 767 mV (RMS); pilot off (100% FM). AM part: f_{AM} = 1 kHz at V_{AM} = 967 mV (RMS) (100% AM). Treble: 10 kHz filter frequency. Bass: 60 Hz filter frequency. Loudness: 50 Hz filter frequency; treble loudness on. V_{CC} = 8.5 V; T_{amb} = 25 °C; see Fig.23; unless otherwise specified.

SYMBOL	PARAMETER	CONDITIONS	MIN.	TYP.	MAX.	UNIT
V_{CC}	supply voltage		8.0	8.5	9.0	V
I_{CC}	supply current	normal mode	–	28	–	mA
		standby RDS; audio on	–	24	–	mA
		standby audio; RDS on	–	19	–	mA
		standby	–	15	–	mA
Logic pins						
V_{IH}	HIGH-level input voltage	pins SDA, SCL, ADDR, SDAG and RDCL	1.75	–	5.5	V
		pins AFHOLD and AFSAMP	1.75	–	5.5	V
V_{IL}	LOW-level input voltage	pins SDA, SCL, ADDR, SDAG and RDCL	–0.2	–	+1.0	V
		pins AFHOLD and AFSAMP	–0.2	–	+1.0	V
V_{OH}	HIGH-level output voltage	pins RDCL and RDDA; I_{OH} = 2.5 μA	2.6	–	–	V
V_{OL}	LOW-level output voltage	pins SCLG, RDCL and RDDA; I_{OL} = 3 mA; note 1	–	–	0.4	V
		pin SDA; I_{OL} = 3 mA	–	–	0.4	V

SYMBOL	PARAMETER	CONDITIONS	MIN.	TYP.	MAX.	UNIT
Stereo decoder and AM path						
$V_{o(FM)(rms)}$	FM mono output voltage (RMS value) on pins LFOUT and RFOUT	f_{FMMPX} = 1 kHz; 91% FM modulation without pilot (V_{FMMPX} = 698 mV)	750	950	1200	mV
$V_{o(AM)(rms)}$	AM output voltage (RMS value) on pins LFOUT and RFOUT	f_{AM} = 1 kHz; V_{AM} = 870 mV; 90% AM modulation	800	1080	1360	mV
G_i	input gain on pins FMMPX, MPXRDS and AM	see Table 61				
		ING[1:0] = 00; all inputs	–	0	–	dB
		ING[1:0] = 01; all inputs	–	3	–	dB
		ING[1:0] = 10; all inputs	–	6	–	dB
		ING[1:0] = 11; FMMPX	–	23.5	–	dB
		ING[1:0] = 11; MPXRDS and AM	–	0	–	dB
α_{cs}	channel separation	f_{FMMPX} = 1 kHz	40	–	–	dB
$g_{c(L-R)}$	roll-off correction for coarse adjustment of separation	see Table 45; measure 1 kHz level for L – R modulation; compare to 1 kHz level for L + R modulation				
		CSR[1:0] = 00	–	0	–	dB
		CSR[1:0] = 01	–	0.4	–	dB
		CSR[1:0] = 10	–	0.8	–	dB
		CSR[1:0] = 11	–	1.2	–	dB
$g_{f(L-R)}$	stereo adjust for fine adjustment of separation	see Table 46; measure 1 kHz level for L – R modulation; compare to 1 kHz level for L + R modulation				
		CSA[3:0] = 0000	–	0	–	dB
		CSA[3:0] = 0001	–	0.2	–	dB
		:	–	:	–	dB
		CSA[3:0] = 1110	–	2.8	–	dB
		CSA[3:0] = 1111	–	3.0	–	dB
S/N	signal-to-noise ratio	f_{FMMPX} = 20 Hz to 15 kHz; referenced to 1 kHz at 91% FM modulation; DEMP = 1 (τ_{de-em} = 50 µs)	75	–	–	dB
THD	total harmonic distortion	FM mode				
		f_{FMMPX} = 1 kHz	–	–	0.3	%
		V_{FMMPX} = 50%; L; pilot on	–	–	0.3	%
		V_{FMMPX} = 50%; R; pilot on	–	–	0.3	%
$V_{o(bal)}$	mono channel balance $\frac{V_{oL}}{V_{oR}}$	FM mode	–1	–	+1	dB
α_{19}	pilot signal suppression	9% pilot; f_{pilot} = 19 kHz; referenced to 1 kHz at 91% FM modulation; DEMP = 1 (τ_{de-em} = 50 µs)	40	50	–	dB

SYMBOL	PARAMETER	CONDITIONS	MIN.	TYP.	MAX.	UNIT
α	subcarrier suppression	modulation off; referenced to 1 kHz at 91% FM modulation				
		f_{sc} = 38 kHz	35	50	–	dB
		f_{sc} = 57 kHz	40	–	–	dB
		f_{sc} = 76 kHz	50	60	–	dB
PSRR	power supply ripple rejection	FM mode; f_{ripple} = 100 Hz; $V_{CC(AC)} = V_{ripple}$ = 100 mV (RMS)	24	–	–	dB
ΔV_{out}	frequency response	FM mode				
		f_{FMMPX} = 20 Hz	–0.5	–	+0.5	dB
		f_{FMMPX} = 15 kHz	–0.5	–	+0.5	dB
$f_{cut\text{-}off(de\text{-}em)}$	cut-off frequency of de-emphasis filter	–3 dB point; see Fig.15				
		DEMP = 1 ($\tau_{de\text{-}em}$ = 50 µs)	–	3.18	–	kHz
		DEMP = 0 ($\tau_{de\text{-}em}$ = 75 µs)	–	2.12	–	kHz
$m_{i(pilot)(rms)}$	pilot threshold modulation for automatic switching by pilot input voltage (RMS value)	stereo				
		on	–	4.0	5.5	%
		off	1.3	2.7	–	%
hys_{pilot}	hysteresis of pilot threshold voltage		–	2	–	dB
$V_{ref(min)}$	minimum reference input voltage		–	–	30	mV
f_{ref}	reference frequency for stereo PLL and RDS demodulator		75361	75368	75375	Hz
Noise blanker						
FM PART						
$t_{sup(min)}$	minimum suppression time		–	15	–	µs
$V_{MPXRDS(M)}$	noise blanker sensitivity at MPXRDS input (peak value of noise pulses)	see Table 62; t_{pulse} = 10 µs; f_{pulse} = 300 Hz				
		NBS[1:0] = 00	–	90	–	mV
		NBS[1:0] = 01	–	150	–	mV
		NBS[1:0] = 10	–	210	–	mV
		NBS[1:0] = 11	–	270	–	mV
$V_{LEVEL(M)}$	noise blanker sensitivity at LEVEL input (peak value of noise pulses)	see Table 65; t_{pulse} = 10 µs; f_{pulse} = 300 Hz				
		NBL[1:0] = 00	–	9	–	mV
		NBL[1:0] = 01	–	18	–	mV
		NBL[1:0] = 10	–	28	–	mV

SYMBOL	PARAMETER	CONDITIONS	MIN.	TYP.	MAX.	UNIT
AM PART						
$t_{sup(min)}$	minimum suppression time		–	200	–	µs
M_{AM}	noise blanker sensitivity	see Table 62; f_{audio} = 2 kHz				
		NBS[1:0] = 00	–	110	–	%
		NBS[1:0] = 01	–	140	–	%
		NBS[1:0] = 10	–	175	–	%
		NBS[1:0] = 11	–	220	–	%
Weak signal processing						
DETECTORS						
$V_{eq(USN)}$	USN sensitivity equivalent level voltage	see Fig.5; f_{MPXRDS} = 150 kHz; V_{MPXRDS} = 250 mV (RMS); HCMP = 1; note 2				
		USS[1:0] = 00	–	2.5	–	V
		USS[1:0] = 01	–	2	–	V
		USS[1:0] = 10	–	1.5	–	V
		USS[1:0] = 11	–	0.5	–	V
$V_{eq(WAM)}$	WAM sensitivity equivalent level voltage	see Fig.6; V_{LEVEL} = 200 mV (p-p) at f = 21 kHz on the level voltage; HCMP = 1; note 2				
		WAS[1:0] = 00	–	2.5	–	V
		WAS[1:0] = 01	–	2	–	V
		WAS[1:0] = 10	–	1.5	–	V
		WAS[1:0] = 11	–	0.5	–	V
$t_{LEVEL(attack)}$	level detector attack time (soft mute and HCC)	see Table 49; LETF = 0; SEAR = 0				
		LET[1:0] = 00	–	3	–	s
		LET[1:0] = 01	–	3	–	s
		LET[1:0] = 10	–	1.5	–	s
		LET[1:0] = 11	–	0.5	–	s
		see Table 49; LETF = 1; SEAR = 0				
		LET[1:0] = 00	–	0.5	–	s
		LET[1:0] = 01	–	0.17	–	s
		LET[1:0] = 10	–	0.06	–	s
		LET[1:0] = 11	–	0.06	–	s
		search mode; SEAR = 1	–	60	–	ms

SYMBOL	PARAMETER	CONDITIONS	MIN.	TYP.	MAX.	UNIT
$t_{LEVEL(decay)}$	level detector decay time (soft mute and HCC)	see Table 49; LETF = 0; SEAR = 0				
		LET[1:0] = 00	–	3	–	s
		LET[1:0] = 01	–	6	–	s
		LET[1:0] = 10	–	1.5	–	s
		LET[1:0] = 11	–	1.5	–	s
		see Table 49; LETF = 1; SEAR = 0				
		LET[1:0] = 00	–	0.5	–	s
		LET[1:0] = 01	–	0.5	–	s
		LET[1:0] = 10	–	0.17	–	s
		LET[1:0] = 11	–	0.06	–	s
		search mode; SEAR = 1	–	60	–	ms
$t_{MPH(attack)}$	multipath detector attack time (SNC)	see Table 50; SEAR = 0				
		MPT[1:0] = 00	–	0.5	–	s
		MPT[1:0] = 01	–	0.5	–	s
		MPT[1:0] = 10	–	0.5	–	s
		MPT[1:0] = 11	–	0.25	–	s
		search mode; SEAR = 1	–	60	–	ms
$t_{MPH(decay)}$	multipath detector decay time (SNC)	see Table 50; SEAR = 0				
		MPT[1:0] = 00	–	12	–	s
		MPT[1:0] = 01	–	24	–	s
		MPT[1:0] = 10	–	6	–	s
		MPT[1:0] = 11	–	6	–	s
		search mode; SEAR = 1	–	60	–	ms
$t_{USN(attack)}$	USN detector attack time (soft mute and SNC)		–	1	–	ms
$t_{USN(decay)}$	USN detector decay time (soft mute and SNC)		–	1	–	ms
ΔUSS	USN detector desensitization	USN sensitivity setting (USS) versus level voltage (USN sensitivity setting is automatically reduced as level voltage decreases)				
		V_{LEVEL} > 1.25 V	–	–	3	–
		1.25 V > V_{LEVEL} > 1.125 V	–	–	2	–
		1.125 V > V_{LEVEL} > 1.0 V	–	–	1	–
		1.0 V > V_{LEVEL}	–	–	0	–
$t_{WAM(attack)}$	WAM detector attack time (SNC)		–	1	–	ms
$t_{WAM(decay)}$	WAM detector decay time (SNC)		–	1	–	ms
$t_{peak(USN)(attack)}$	peak detector for USN attack time for read-out via I^2C-bus		–	1	–	ms

SYMBOL	PARAMETER	CONDITIONS	MIN.	TYP.	MAX.	UNIT
$t_{peak(USN)(decay)}$	peak detector for USN decay time for read-out via I²C-bus		–	10	–	ms
$t_{peak(WAM)(attack)}$	peak detector for WAM attack time for read-out via I²C-bus		–	1	–	ms
$t_{peak(WAM)(decay)}$	peak detector for WAM decay time for read-out via I²C-bus		–	10	–	ms
CONTROL FUNCTIONS						
$V_{start(mute)}$	soft mute start voltage	see Fig.12; voltage at pin LEVEL that causes α_{mute} = 3 dB; MSL[1:0] = 11				
		MST[2:0] = 000	–	0.75	–	V
		MST[2:0] = 001	–	0.88	–	V
		MST[2:0] = 010	–	1	–	V
		MST[2:0] = 011	–	1.12	–	V
		MST[2:0] = 100	–	1.25	–	V
		MST[2:0] = 101	–	1.5	–	V
		MST[2:0] = 110	–	1.75	–	V
		MST[2:0] = 111	–	2	–	V
C_{mute}	soft mute slope $C_{mute} = \frac{\Delta\alpha_{mute}}{\Delta V_{eq}}$	see Fig.13; slope of soft mute attenuation with respect to level voltage; MST[2:0] = 000				
		MSL[1:0] = 00	–	8	–	dB/V
		MSL[1:0] = 01	–	16	–	dB/V
		MSL[1:0] = 10	–	24	–	dB/V
		MSL[1:0] = 11	–	32	–	dB/V
$\alpha_{mute(max)}$	maximum soft mute attenuation by USN	see Fig.14; f_{MPXRDS} = 150 kHz; V_{MPXRDS} = 0.6 V (RMS); USS[1:0] = 11				
		UMD[1:0] = 00	–	3	–	dB
		UMD[1:0] = 01	–	6	–	dB
		UMD[1:0] = 10	–	9	–	dB
		UMD[1:0] = 11	–	12	–	dB
$V_{start(SNC)}$	SNC stereo blend start voltage	see Fig.7; voltage at pin LEVEL that causes channel separation = 10 dB; SSL[1:0] = 10				
		SST[3:0] = 0000	–	1.5	–	V
		:	–	:	–	V
		SST[3:0] = 1000	–	2.0	–	V
		:	–	:	–	V
		SST[3:0] = 1111	–	2.45	–	V

SYMBOL	PARAMETER	CONDITIONS	MIN.	TYP.	MAX.	UNIT
C_{SNC}	SNC slope $C_{SNC} = \frac{\Delta\alpha_{cs}}{\Delta V_{eq}}$	see Fig.8; slope of channel separation between 30 dB and 10 dB with respect to level voltage; SST[3:0] = 1010				
		SSL[1:0] = 00	–	38	–	dB/V
		SSL[1:0] = 01	–	51	–	dB/V
		SSL[1:0] = 10	–	63	–	dB/V
		SSL[1:0] = 11	–	72	–	dB/V
$V_{start(HCC)}$	HCC start voltage	see Fig.9; f_{audio} = 10 kHz; voltage at pin LEVEL that causes α_{HCC} = 3 dB; HSL[1:0] = 10				
		HST[2:0] = 000	–	1.17	–	V
		HST[2:0] = 001	–	1.42	–	V
		HST[2:0] = 010	–	1.67	–	V
		HST[2:0] = 011	–	1.92	–	V
		HST[2:0] = 100	–	2.17	–	V
		HST[2:0] = 101	–	2.67	–	V
		HST[2:0] = 110	–	3.17	–	V
		HST[2:0] = 111	–	3.67	–	V
C_{HCC}	HCC slope $C_{HCC} = \frac{\Delta\alpha_{HCC}}{\Delta V_{eq}}$	see Fig.10; f_{audio} = 10 kHz; HST[2:0] = 010				
		HSL[1:0] = 00	–	9	–	dB/V
		HSL[1:0] = 01	–	11	–	dB/V
		HSL[1:0] = 10	–	14	–	dB/V
		HSL[1:0] = 11	–	18	–	dB/V
$\alpha_{HCC(max)}$	maximum HCC attenuation	see Fig.10; f_{audio} = 10 kHz				
		HCSF = 1	–	10	–	dB
		HCSF = 0	–	14	–	dB
$f_{cut-off}$	cut-off frequency of fixed HCC	see Table 56; –3 dB point (first order filter)				
		HCF[2:0] = 000	–	1.5	–	kHz
		HCF[2:0] = 001	–	2.2	–	kHz
		HCF[2:0] = 010	–	3.3	–	kHz
		HCF[2:0] = 011	–	4.7	–	kHz
		HCF[2:0] = 100	–	6.8	–	kHz
		HCF[2:0] = 101	–	10	–	kHz
		HCF[2:0] = 110	–	wide	–	–
		HCF[2:0] = 111	–	unlimited	–	–
Analog-to-digital converters for I²C-bus						
LEVEL ANALOG-TO-DIGITAL CONVERTER (8-BIT); see Fig.4						
$V_{LEVEL(min)}$	lower voltage limit of conversion range		–	0.25	–	V

SYMBOL	PARAMETER	CONDITIONS	MIN.	TYP.	MAX.	UNIT
$V_{LEVEL(max)}$	upper voltage limit of conversion range		–	4.25	–	V
ΔV_{LEVEL}	bit resolution voltage		–	15.7	–	mV
ULTRASONIC NOISE ANALOG-TO-DIGITAL CONVERTER (4-BIT); see Fig.5						
$V_{USN(min)(rms)}$	conversion range lower voltage limit (RMS value)	f_{FMMPX} = 150 kHz	–	0	–	V
$V_{USN(max)(rms)}$	conversion range upper voltage limit (RMS value)	f_{FMMPX} = 150 kHz	–	0.75	–	V
$\Delta V_{USN(rms)}$	bit resolution voltage (RMS value)		–	50	–	mV
WIDEBAND AM ANALOG-TO-DIGITAL CONVERTER (4-BIT); see Fig.6						
$V_{WAM(min)(p-p)}$	lower voltage limit of conversion range (peak-to-peak value)	f_{LEVEL} = 21 kHz	–	0	–	mV
$V_{WAM(max)(p-p)}$	upper voltage limit of conversion range (peak-to-peak value)	f_{LEVEL} = 21 kHz	–	800	–	mV
$\Delta V_{WAM(p-p)}$	bit resolution voltage (peak-to-peak value)		–	53.3	–	mV
Tone/volume control						
Z_i	input impedance at pins TAPEL, TAPER, CDL and CDR		80	–	–	kΩ
	input impedance at pin PHONE		50	–	–	kΩ
Z_o	output impedance at pins LFOUT, RFOUT, LROUT and RROUT		–	–	100	Ω
$G_{s(main)}$	signal gain from main source input to LFOUT, RFOUT, LROUT and RROUT outputs		–1	–	+1	dB
$G_{s(NAV)}$	signal gain from NAV input to LFOUT, RFOUT, LROUT and RROUT outputs		–1.5	0	+1.5	dB
$V_{i(max)(rms)}$	maximum input voltage level at pins TAPEL, TAPER, CDL, CDR and PHONE (RMS value)	THD = 0.1%; G_{vol} = –6 dB	2	–	–	V
$V_{i(NAV)(max)(rms)}$	maximum input voltage level at pin NAV (RMS value)	THD = 1%	0.3	–	–	V

SYMBOL	PARAMETER	CONDITIONS	MIN.	TYP.	MAX.	UNIT
$V_{o(max)(rms)}$	maximum output voltage (RMS value)	THD = 0.1%; G_{vol} = +6 dB	2	–	–	V
		worst case load: R_L = 2 kΩ, C_L = 10 nF, THD = 1%	2	–	–	V
f_{max}	frequency response (pins TAPER, TAPEL, CDR and CDL)	upper –0.5 dB point; referenced to 1 kHz	20	–	–	kHz
CMRR	common mode rejection ratio	f_{audio} = 20 Hz to 20 kHz on CD and PHONE inputs				
		G_{vol} = 0 dB	40	–	–	dB
		G_{vol} = –15 dB	55	–	–	dB
α_{cs}	channel separation	f_{audio} = 20 Hz to 20 kHz	60	80	–	dB
α_S	input isolation of one selected source to any other input	f_{audio} = 1 kHz	90	105	–	dB
		f_{audio} = 20 Hz to 10 kHz	75	90	–	dB
		f_{audio} = 20 kHz	70	–	–	dB
THD	total harmonic distortion	TAPE and CD inputs				
		f_{audio} = 20 Hz to 10 kHz; V_i = 1 V (RMS)	–	0.01	0.1	%
		f_{audio} = 1 kHz; V_i = 2 V (RMS); G_{vol} = 0 dB	–	0.02	0.1	%
		f_{audio} = 20 Hz to 10 kHz; V_i = 2 V (RMS); G_{vol} = –10 dB	–	0.02	0.2	%
		f_{audio} = 25 Hz; V_i = 500 mV (RMS); G_{bass} = +8 dB; G_{vol} = 0 dB	–	0.05	0.2	%
		f_{audio} = 4 kHz; V_i = 500 mV (RMS); G_{treble} = +8 dB; G_{vol} = 0 dB	–	0.01	0.2	%
		NAV input; f_{audio} = 1 kHz; V_o = 300 mV (RMS)	–	–	1	%
$V_{noise(rms)}$	noise voltage (RMS value)	CCIR-ARM weighted and 20 kHz ‘brick wall’ without input signal and shorted AF inputs				
		G_{vol} = 0 dB	–	12	20	μV
		G_{bass} = +6 dB; G_{treble} = +6 dB; G_{vol} = 0 dB	–	24	35	μV
		G_{vol} = 20 dB; TAPE input (stereo)	–	71	100	μV
		G_{vol} = 20 dB; CD input (quasi-differential)	–	100	140	μV
		G_{vol} = –10 dB	–	10	18	μV
		G_{vol} = –40 dB; $G_{loudness}$ = –20 dB	–	9.5	13.5	μV
		outputs muted	–	5	12	μV
		using ‘A-weighting’ filter and 20 kHz ‘brick wall’; G_{vol} = –10 dB; $G_{loudness}$ = –10 dB	–	6.8	10	μV
		NAV input	–	16	40	μV

SYMBOL	PARAMETER	CONDITIONS	MIN.	TYP.	MAX.	UNIT
ΔG_{step}	step error (all controls) between all adjoining steps, all outputs	G = +20 to –36 dB	–	–	0.5	dB
		G = –36 to –59 dB	–	–	1.0	dB
TC_{ASI}	ASI time constant (switching time from any setting to any other setting)	see Table 67				
		AST[1:0] = 00	–	1	–	ms
		AST[1:0] = 01	–	3	–	ms
		AST[1:0] = 10	–	10	–	ms
		AST[1:0] = 11	–	30	–	ms
$V_{offset(max)}$	maximum DC offset	between any two settings (non-consecutive) on any one audio control or any one dynamic weak signal processing control	–	7	–	mV
PSRR	power supply ripple rejection	$V_{CC(AC)} = V_{ripple}$ = 200 mV (RMS)				
		f_{ripple} = 20 to 100 Hz	35	46	–	dB
		f_{ripple} = 1 kHz	50	75	–	dB
		f_{ripple} = 1 to 20 kHz	50	65	–	dB
α_{ct}	crosstalk between bus inputs and signal outputs	f_{clk} = 100 kHz; note 3	–	110	–	dB
$t_{turn-on}$	turn-on time from V_{CC} applied to 66% final DC voltage at outputs		–	100	–	ms
LOUDNESS						
$f_{loudness(low)}$	loudness low boost frequency; without influence of coupling capacitors	amplitude decrease = –3 dB				
		LLF = 0	–	50	–	Hz
		LLF = 1	–	100	–	Hz
$f_{loudness(high)}$	loudness filter response; without influence of coupling capacitors	amplitude decrease = –1 dB; frequency referred to 100 kHz; high boost on	–	10	–	kHz
$G_{loudness}$	loudness gain control	$f_{loudness(low)}$ = 50 Hz; high boost on; see Fig.16				
		maximum setting; 1 kHz tone	–	0	–	dB
		minimum setting; 1 kHz tone	–	–20	–	dB
		minimum setting; 50 Hz tone	–	–3	–	dB
		minimum setting; 10 kHz tone	–	–16	–	dB
		minimum setting; 100 kHz tone	–	–15	–	dB
		step size; 1 kHz tone	–	1	–	dB
VOLUME						
G_{vol}	volume/balance gain control	see Table 73				
		maximum setting	–	20	–	dB
		minimum setting	–	–59	–	dB
		mute attenuation; 20 Hz to 20 kHz input	–	–80	–70	dB

SYMBOL	PARAMETER	CONDITIONS	MIN.	TYP.	MAX.	UNIT
$G_{step(vol)}$	step resolution gain (volume)	see Table 73	–	1	–	dB
ΔG_{set}	gain set error	G_{vol} = +20 to –36 dB	–1	0	+1	dB
		G_{vol} = –36 to –59 dB	–3	0	+3	dB
ΔG_{track}	gain tracking error between left and right	G_{vol} = +20 to –36 dB	–	0	1	dB
		G_{vol} = –36 to –59 dB	–	0	3	dB
TREBLE						
$f_{cut\text{-}off(treble)}$	treble control filter cut-off frequency	see Table 77; –3 dB frequency referred to 100 kHz				
		TRF[1:0] = 00	–	8	–	kHz
		TRF[1:0] = 01	–	10	–	kHz
		TRF[1:0] = 10	–	12	–	kHz
		TRF[1:0] = 11	–	15	–	kHz
G_{treble}	treble gain control	see Table 76				
		maximum setting	–	14	–	dB
		minimum setting	–	–14	–	dB
$G_{step(treble)}$	step resolution gain (treble)	see Table 76	–	2	–	dB
BASS						
$f_{c(bass)}$	bass control filter centre frequency	see Table 81				
		BAF[1:0] = 00	–	60	–	Hz
		BAF[1:0] = 01	–	80	–	Hz
		BAF[1:0] = 10	–	100	–	Hz
		BAF[1:0] = 11	–	120	–	Hz
Q_{bass}	bass filter quality factor	G_{bass} = +12 dB	–	1.0	–	–
EQ_{bow}	equalizer bowing	f_{audio} = 1 kHz; V_i = 500 mV (RMS); G_{bass} = +12 dB; $f_{c(bass)}$ = 60 Hz; G_{treble} = +12 dB; $f_{cut\text{-}off(treble)}$ = 10 kHz; see Fig.3	–	1.8	–	dB
G_{bass}	bass gain control	see Table 80				
		maximum setting; symmetrical boost	–	14	–	dB
		minimum setting; asymmetrical cut	–	–14	–	dB
		minimum setting; symmetrical cut	–	–14	–	dB
$G_{step(bass)}$	step resolution gain (bass)	see Table 80	–	2	–	dB
FADER						
G_{fader}	fader gain control	see Table 84				
		maximum setting	–	0	–	dB
		minimum setting	–	–59	–	dB
		mute attenuation; 20 Hz to 20 kHz input	–	–80	–66	dB

SYMBOL	PARAMETER	CONDITIONS	MIN.	TYP.	MAX.	UNIT
$G_{step(fader)}$	step resolution gain (fader)	see Table 84				
		G_{fader} = 0 to –15 dB	–	1	–	dB
		G_{fader} = –15 to –45 dB	–	2.5	–	dB
		G_{fader} = –45 to –51 dB	–	3	–	dB
		G_{fader} = –51 to –59 dB	–	4	–	dB
α_{mute}	audio mute	volume control: mute and output muted (bits MULF, MURF, MULR and MURR)	90	–	–	dB
BEEP						
f_{beep}	beep generator frequency	see Table 93				
		BEF[1:0] = 00	–	500	–	Hz
		BEF[1:0] = 01	–	1	–	kHz
		BEF[1:0] = 10	–	2	–	kHz
		BEF[1:0] = 11	–	3	–	kHz
$V_{beep(rms)}$	beep generator audio level (RMS value)	see Table 92				
		BEL[2:0] = 000	–	0	–	mV
		BEL[2:0] = 001	–	13.3	–	mV
		BEL[2:0] = 010	–	18	–	mV
		BEL[2:0] = 011	–	28	–	mV
		BEL[2:0] = 100	–	44	–	mV
		BEL[2:0] = 101	–	60	–	mV
		BEL[2:0] = 110	–	90	–	mV
		BEL[2:0] = 111	–	150	–	mV
THD_{beep}	total harmonic distortion of beep generator	f_{beep} = 1 kHz or 2 kHz	–	–	7	%
Power-on reset (all registers in default setting, outputs muted, standby mode)						
$V_{th(POR)}$	threshold voltage of Power-on reset		–	6.3	–	V

Notes

1. The LOW voltage of pin SCLG is influenced by V_{SCL}: $V_{SCLG(LOW)} \geq V_{SCL(LOW)} + 0.22$ V.
2. The equivalent level voltage is that value of the level voltage (at pin LEVEL) which results in the same weak signal control effect (for instance HCC roll-off) as the output value of the specified detector (USN, WAM and MPH).
3. Crosstalk between bus inputs and signal outputs: $\alpha_{ct} = 20\log\frac{V_{bus(p-p)}}{V_{o(rms)}}$

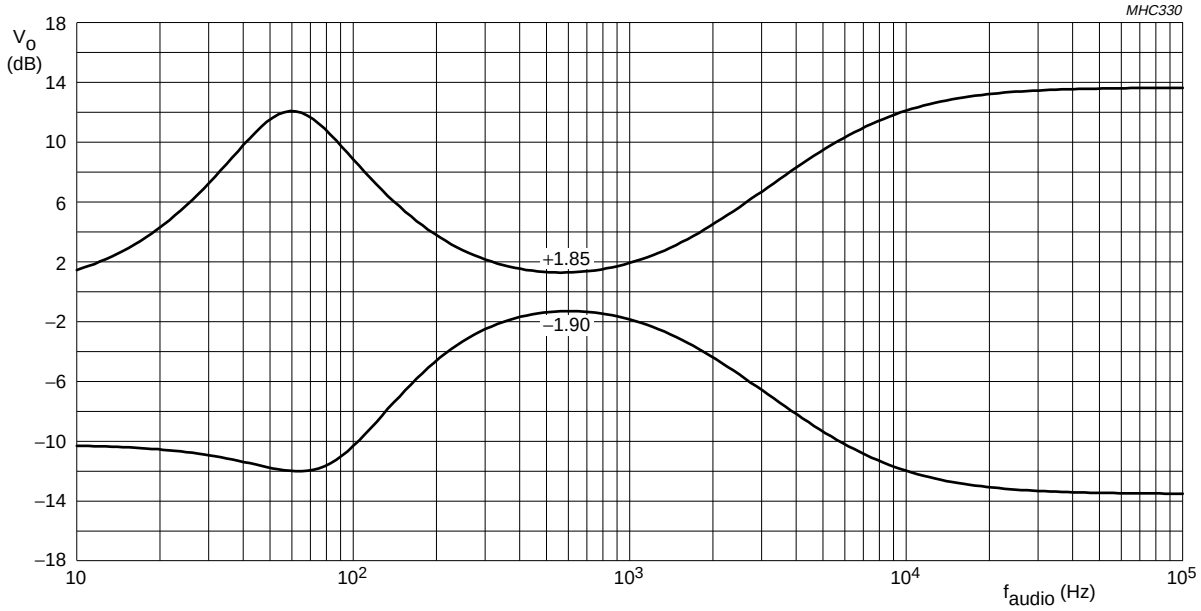

G_{bass} = +12 and –12 dB.
G_{treble} = +12 and –12 dB.
$f_{cut\text{-}off(treble)}$ = 10 kHz.
$f_{c(bass)}$ = 60 Hz.

Fig.3 Equalizer bowing.

11 I²C-BUS PROTOCOL

Table 1 Write mode

S[1]	address (write)	A[2]	subaddress	A[2]	data byte(s)	A[2]	P[3]

Notes

1. S = START condition.
2. A = acknowledge.
3. P = STOP condition.

Table 2 Read mode

S[1]	address (read)	A[2]	data byte(s)	A[2]	data byte	NA[3]	P[4]

Notes

1. S = START condition.
2. A = acknowledge.
3. NA = not acknowledge.
4. P = STOP condition.

Table 3 IC address byte

IC ADDRESS							MODE
0	0	1	1	0	0	ADDR	R/$\overline{W}$

Table 4 Description of IC address byte

BIT	SYMBOL	DESCRIPTION
7 to 2	–	001100+(ADDR) = IC address.
1	ADDR	**Address bit.** 0 = pin ADDR is grounded; 1 = pin ADDR is floating.
0	R/$\overline{W}$	**Read/Write.** 0 = write mode; 1 = read mode.

11.1 Read mode

11.1.1 DATA BYTE 1; STATUS

Table 5 Format of data byte 1

BIT 7	BIT 6	BIT 5	BIT 4	BIT 3	BIT 2	BIT 1	BIT 0
STIN	ASIA	AFUS	POR	RDAV	ID2	ID1	ID0

Table 6 Description of data byte 1

BIT	SYMBOL	DESCRIPTION
7	STIN	**Stereo indicator.** 0 = no pilot signal detected; 1 = pilot signal detected.
6	ASIA	**ASI active.** 0 = not active; 1 = ASI step is in progress.
5	AFUS	**AF update sample.** 0 = LEV, USN and WAM information is taken from main frequency (continuous mode); 1 = LEV, USN and WAM information is taken from alternative frequency. Continuous mode during AF update and sampled mode after AF update. Sampled mode reverts to continuous main frequency information after read.
4	POR	**Power-on reset.** 0 = standard operation (valid I^2C-bus register settings); 1 = Power-on reset detected since last read cycle (I^2C-bus register reset). After read the bit will reset to POR = 0.
3	RDAV	**RDS data available.** This bit indicates, that RDS block data is available.
2 to 0	ID[2:0]	**Identification.** TEF6892H device type identification; ID[2:0] = 010.

11.1.2 DATA BYTE 2; LEVEL

Table 7 Format of data byte 2

BIT 7	BIT 6	BIT 5	BIT 4	BIT 3	BIT 2	BIT 1	BIT 0
LEV7	LEV6	LEV5	LEV4	LEV3	LEV2	LEV1	LEV0

Table 8 Description of data byte 2

BIT	SYMBOL	DESCRIPTION
7 to 0	LEV[7:0]	**Level.** 8-bit value of level voltage from tuner; see Fig.4.

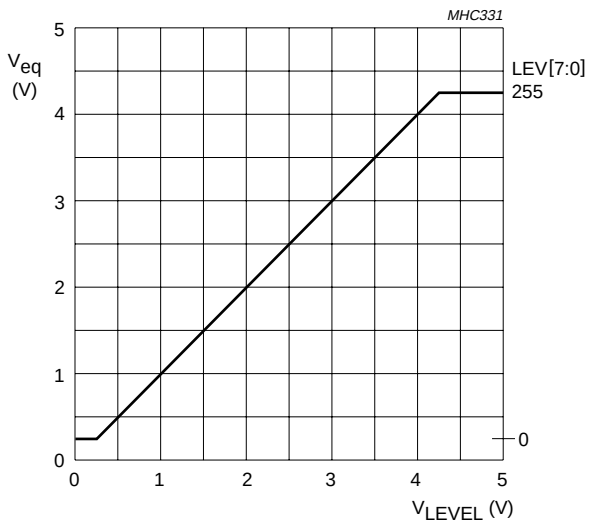

Fig.4 Equivalent level voltage V_{eq} (MPH and LEV detector) as a function of level voltage V_{LEVEL}.

11.1.3 DATA BYTE 3; USN AND WAM

Table 9 Format of data byte 3

BIT 7	BIT 6	BIT 5	BIT 4	BIT 3	BIT 2	BIT 1	BIT 0
USN3	USN2	USN1	USN0	WAM3	WAM2	WAM1	WAM0

Table 10 Description of data byte 3

BIT	SYMBOL	DESCRIPTION
7 to 4	USN[3:0]	**Ultrasonic noise detector.** USN content of the MPXRDS audio signal; see Fig.5.
3 to 0	WAM[3:0]	**Wideband AM detector.** WAM content of the LEVEL voltage; see Fig.6.

11.1.4 DATA BYTE 4; RDS STATUS

Table 11 Format of data byte 4

BIT 7	BIT 6	BIT 5	BIT 4	BIT 3	BIT 2	BIT 1	BIT 0
SYNC	DOFL	RSTD	LBI2	LBI1	LBI0	ELB1	ELB0

Table 12 Description of data byte 4

BIT	SYMBOL	DESCRIPTION
7	SYNC	**Synchronization found status.** 0 = synchronization is searched. 1 = synchronization found.
6	DOFL	**Data overflow flag.** 0 = normal operation. 1 = data overflow is detected (no update).
5	RSTD	**Reset detected.** 0 = normal operation. 1 = decoder reset (POR) is in progress.
4 to 2	LBI[2:0]	**Last block identification.** See Table 25.
1 and 0	ELB[1:0]	**Error status last block.** See Table 26.

11.1.5 DATA BYTE 5; RDS LDATM

Table 13 Format of data byte 5

BIT 7	BIT 6	BIT 5	BIT 4	BIT 3	BIT 2	BIT 1	BIT 0
LM15	LM14	LM13	LM12	LM11	LM10	LM9	LM8

Table 14 Description of data byte 5

BIT	SYMBOL	DESCRIPTION
7 to 0	LM[15:8]	Block data of previously received RDS block, most significant byte.

11.1.6 DATA BYTE 6; RDS LDATL

Table 15 Format of data byte 6

BIT 7	BIT 6	BIT 5	BIT 4	BIT 3	BIT 2	BIT 1	BIT 0
LM7	LM6	LM5	LM4	LM3	LM2	LM1	LM0

Table 16 Description of data byte 6

BIT	SYMBOL	DESCRIPTION
7 to 0	LM[7:0]	Block data of previously received RDS block, least significant byte.

11.1.7 DATA BYTE 7; RDS PDATM

Table 17 Format of data byte 7

BIT 7	BIT 6	BIT 5	BIT 4	BIT 3	BIT 2	BIT 1	BIT 0
PM15	PM14	PM13	PM12	PM11	PM10	PM9	PM8

Table 18 Description of data byte 7

BIT	SYMBOL	DESCRIPTION
7 to 0	PM[15:8]	Block data of previously received RDS block, most significant byte. Only relevant when reduced data request mode is active (DAC = 10; see Table 40).

11.1.8 DATA BYTE 8; RDS PDATL

Table 19 Format of data byte 8

BIT 7	BIT 6	BIT 5	BIT 4	BIT 3	BIT 2	BIT 1	BIT 0
PM7	PM6	PM5	PM4	PM3	PM2	PM1	PM0

Table 20 Description of data byte 8

BIT	SYMBOL	DESCRIPTION
7 to 0	PM[7:0]	Block data of previously received RDS block, least significant byte. Only relevant when reduced data request mode is active (DAC = 10; see Table 40).

11.1.9 DATA BYTE 9; RDS COUNT

Table 21 Format of data byte 9

BIT 7	BIT 6	BIT 5	BIT 4	BIT 3	BIT 2	BIT 1	BIT 0
BBC5	BBC4	BBC3	BBC2	BBC1	BBC0	GBC5	GBC4

Table 22 Description of data byte 9

BIT	SYMBOL	DESCRIPTION
7 to 2	BBC[5:0]	**Bad block counter.** Counter value of received invalid blocks; n = 0 to 63.
1 and 0	GBC[5:4]	**Good block counter.** Two most significant bits of received valid blocks counter; n = 0 to 62. Remark: the least significant bit is not available for reading (assume GBC0 = 0).

11.1.10 DATA BYTE 10; RDS PBIN

Table 23 Format of data byte 10

BIT 7	BIT 6	BIT 5	BIT 4	BIT 3	BIT 2	BIT 1	BIT 0
GBC3	GBC2	GBC1	PBI2	PBI1	PBI0	EPB1	EPB0

Table 24 Description of data byte 10

BIT	SYMBOL	DESCRIPTION
7 to 5	GBC[3:1]	**Good block counter.** Three least significant bits of received valid blocks counter; n = 0 to 62. Remark: the least significant bit is not available for reading (assume GBC0 = 0).
4 to 2	PBI[2:0]	**Previous block identification.** See Table 25.
1 and 0	EPB[1:0]	**Error status previous block.** See Table 26.

Table 25 Description of data bits LBI[2:0] and PBI[2:0]

LBI2	LBI1	LBI0	BLOCK TYPE IDENTIFICATION OF LAST AND PREVIOUS RECEIVED BLOCK DATA
PBI2	PBI1	PBI0	
0	0	0	A
0	0	1	B
0	1	0	C
0	1	1	D
1	0	0	C’
1	0	1	E (RBDS mode)
1	1	0	invalid E (RDS mode)
1	1	1	invalid block

Table 26 Description of data bits ELB[1:0] and EPB[1:0]

ELB1	ELB0	ERROR STATUS OF LAST AND PREVIOUS RECEIVED BLOCK DATA
EPB1	EPB0	
0	0	no errors
0	1	corrected burst error of maximum 2 bits
1	0	corrected burst error of maximum 5 bits
1	1	uncorrectable error

11.2 Write mode

Table 27 Format for subaddress byte with default setting

BIT 7	BIT 6	BIT 5	BIT 4	BIT 3	BIT 2	BIT 1	BIT 0
AIOF	GATE	SGAT	SA4	SA3	SA2	SA1	SA0
–	0	0	–	–	–	–	–

Table 28 Description of subaddress byte

BIT	SYMBOL	DESCRIPTION
7	AIOF	**Auto-increment off.** 0 = auto-increment enabled; 1 = auto-increment disabled.
6	GATE	**Gate.** 0 = I^2C-bus outputs (SDAG and SCLG) are controllable by the shortgate or the autogate function; 1 = I^2C-bus outputs are enabled.
5	SGAT	**Shortgate.** 1 = I^2C-bus outputs (SDAG and SCLG) are enabled for a single transmission following this control and disabled automatically.
4 to 0	SA[4:0]	**Data byte select.** The subaddress value is auto-incremented when AIOF = 0 and will revert from SA = 30 to SA = 0. SA = 31 can only be accessed via direct subaddress selection, in which case auto-increment will revert from SA = 31 to SA = 0; see Table 29.

Table 29 Selection of data byte

SA4	SA3	SA2	SA1	SA0	HEX	MNEMONIC	ADDRESSED DATA BYTE
0	0	0	0	0	0	RDS SET A	settings of RDS/RBDS
0	0	0	0	1	1	RDS SET B	settings of RDS/RBDS
0	0	0	1	0	2	RDSCLK	clock of RDS/RBDS
0	0	0	1	1	3	RDS CONTROL	control of RDS/RBDS function
0	0	1	0	0	4	CONTROL	control of supply and AF update
0	0	1	0	1	5	CSALIGN	alignment of stereo channel separation
0	0	1	1	0	6	MULTIPATH	control of weak signal sensitivity and timing
0	0	1	1	1	7	SNC	alignment of SNC start and slope
0	1	0	0	0	8	HIGHCUT	alignment of HCC start and slope
0	1	0	0	1	9	SOFTMUTE	alignment soft mute start and slope
0	1	0	1	0	A	RADIO	control of radio functions
0	1	0	1	1	B	INPUT/ASI	source selector and ASI settings
0	1	1	0	0	C	LOUDNESS	loudness control
0	1	1	0	1	D	VOLUME	volume control
0	1	1	1	0	E	TREBLE	treble control
0	1	1	1	1	F	BASS	bass control
1	0	0	0	0	10	FADER	fader control
1	0	0	0	1	11	BALANCE	balance control
1	0	0	1	0	12	MIX	control of output mixer
1	0	0	1	1	13	BEEP	beep generator settings
1	1	1	1	1	1F	AUTOGATE	autogate control

11.2.1 SUBADDRESS 0H; RDS SET A

Table 30 Format of data byte 0H with default setting

BIT 7	BIT 6	BIT 5	BIT 4	BIT 3	BIT 2	BIT 1	BIT 0
–	SYM1	SYM0	GBL5	GBL4	GBL3	GBL2	GBL1
0	0	0	1	0	0	0	1

Table 31 Description of data byte 0H

BIT	SYMBOL	DESCRIPTION
7	–	Not used. Set to logic 0.
6 and 5	SYM[1:0]	**Synchronization mode.** See Table 32.
4 to 0	GBL[5:1]	**Maximum good blocks lose (0 to 63).** Number of valid blocks (good blocks counter) at which both the good block counter and the bad block counter are reset to 0. Only used when synchronized. GBL0 is located in byte RDS SET B. When the bad block counter reaches value BBL (see byte RDS SET B) before the good block counter reaches value GBL a new synchronization is started.

Table 32 Description of synchronization mode

SYM1	SYM0	SYNCHRONIZATION MODE
0	0	no error correction; only error free blocks are handled as valid
0	1	limited error correction; up to 2 bits error correctable blocks are handled as valid
1	0	full error correction; up to 5 bits error correctable blocks are handled as valid
1	1	mixed mode; only error free blocks are handled as valid for synchronization search, but when synchronized, up to 5 bits error correctable blocks are handled as valid

11.2.2 SUBADDRESS 1H; RDS SET B

Table 33 Format of data byte 1H with default setting

BIT 7	BIT 6	BIT 5	BIT 4	BIT 3	BIT 2	BIT 1	BIT 0
GBL0	RBDS	BBL5	BBL4	BBL3	BBL2	BBL1	BBL0
0	0	0	0	0	0	0	1

Table 34 Description of data byte 1H

BIT	SYMBOL	DESCRIPTION
7	GBL0	**Maximum good blocks lose (0 to 63);** see Table 31.
6	RBDS	**RBDS mode.** 0 = RDS mode, RBDS type E blocks are handled as invalid (bad block); 1 = RBDS mode, RBDS type E blocks are handled as valid (good block).
5 to 0	BBL[5:0]	**Maximum bad blocks lose (0 to 63).** Number of invalid blocks (bad blocks counter) at which a new synchronization is started. Both the good block counter and the bad block counter are reset to 0.

11.2.3 SUBADDRESS 2H; RDSCLK

Table 35 Format of data byte 2H with default setting

BIT 7	BIT 6	BIT 5	BIT 4	BIT 3	BIT 2	BIT 1	BIT 0
–	–	TST3	TST2	TST1	TST0	CLKO	CLKI
–	–	0	0	0	0	0	1

Table 36 Description of data byte 2H

BIT	SYMBOL	DESCRIPTION
7 and 6	–	Not used. Set to logic 0.
5 to 2	TST[3:0]	**Test.** TST[3:0] = 0000: normal operation.
1	CLKO	**Clock input or output and buffered or unbuffered raw RDS output.** See Table 37.
0	CLKI	

Table 37 RDS clock description

CLKO	CLKI	RDS/RBDS CLOCK
0	0	RDS decoder mode; pin RDCL is disabled
0	1	for RDS decoder bypass mode; RDCL is burst clock input for raw RDS read-out
1	0	for RDS decoder mode: continuous block rate data available signal at pin RDCL; for RDS decoder bypass mode: RDCL is clock output for raw RDS read-out
1	1	reserved

11.2.4 SUBADDRESS 3H; RDS CONTROL

Table 38 Format of data byte 3H with default setting

BIT 7	BIT 6	BIT 5	BIT 4	BIT 3	BIT 2	BIT 1	BIT 0
DAC1	DAC0	NWSY	BBG4	BBG3	BBG2	BBG1	BBG0
0	0	0	0	0	0	0	0

Table 39 Description of data byte 3H

BIT	SYMBOL	DESCRIPTION
7 and 6	DAC[1:0]	**Data available control.** See Table 40.
5	NWSY	**New synchronization search.** 0 = synchronization is started by BBL value of bad block counter only; 1 = restart of synchronization search. NWSY is automatically reset to logic 0.
4 to 0	BBG[4:0]	**Maximum bad blocks gain.** Number of invalid blocks (bad block counter) that is allowed during synchronization search. If reached, a new synchronization is started. BBG[4:0] = 0 disables this function.

Table 40 Description of data available control

DAC1	DAC0	DATA AVAILABLE CONTROL
0	0	standard output mode; new block data is signalled at every new received block
0	1	fast PI search mode; during synchronization search (SYNC = 0) A or C’ block data is available and signalled, when synchronized standard output mode is active
1	0	reduced data request mode; when synchronized new block data is signalled every two new received blocks
1	1	decoder bypass mode; raw RDS data from demodulator is available on pin RDDA

11.2.5 SUBADDRESS 4H; CONTROL

Table 41 Format of data byte 4H with default setting

BIT 7	BIT 6	BIT 5	BIT 4	BIT 3	BIT 2	BIT 1	BIT 0
STBR	STBA	AFUM	AFUH	RMUT	–	LETF	ATTB
1	1	0	0	0	–	0	0

Table 42 Description of data byte 4H

BIT	SYMBOL	DESCRIPTION
7	STBR	**Standby mode RDS processing.** 0 = RDS processing active; 1 = RDS processing in standby mode (RDS off, RDS outputs LOW).
6	STBA	**Standby mode audio processing.** 0 = audio processing active; 1 = audio processing in standby mode (audio inputs and outputs at DC).
5	AFUM	**Enables AF update mute.** 0 = AF update mute disabled; 1 = AF update mute enabled (controlled by AFSAMP and AFHOLD input).
4	AFUH	**AF update hold function.** 0 = disable, the weak signal processing hold is controlled by the AFHOLD input only; 1 = hold. This is equal to taking the AFHOLD input LOW. The bit is reset to 0, when AFHOLD input is set to LOW (i.e. at AF update or preset change).
3	RMUT	**Radio signal mute.** 0 = no mute; 1 = mute with 1 ms ASI slope at start and stop.
2	–	Not used. Set to logic 0.
1	LETF	**Fast level detector time constants.** 0 = slow level detector time constants are used; 1 = fast level detector time constants are used. See Table 49.
0	ATTB	**Attack bound of the MPH and LEV detector.** 0 = detectors are unbounded; 1 = range of the MPH and LEV detector are limited in their range for immediate start of attack. In AM mode the detectors are always unbounded.

11.2.6 SUBADDRESS 5H; CSALIGN

Table 43 Format of data byte 5H with default setting

BIT 7	BIT 6	BIT 5	BIT 4	BIT 3	BIT 2	BIT 1	BIT 0
CSR1	CSR0	CSA3	CSA2	CSA1	CSA0	–	–
0	1	0	1	1	1	–	–

Table 44 Description of data byte 5H

BIT	SYMBOL	DESCRIPTION
7 and 6	CSR[1:0]	**FM stereo channel separation (high frequency).** See Table 45.
5 to 2	CSA[3:0]	**FM stereo channel separation and adjustment.** See Table 46.
1 and 0	–	Not used. Set to logic 0.

Table 45 FM stereo channel separation

CSR1	CSR0	FM STEREO CHANNEL SEPARATION (dB)
0	0	0
0	1	0.4
1	0	0.8
1	1	1.2

Table 46 FM stereo channel separation and adjustment

CSA3	CSA2	CSA1	CSA0	FM STEREO CHANNEL SEPARATION AND ADJUSTMENT (dB)
0	0	0	0	0
0	0	0	1	0.2
:	:	:	:	:
1	1	1	0	2.8
1	1	1	1	3.0

11.2.7 SUBADDRESS 6H; MULTIPATH

Table 47 Format of data byte 6H with default setting

BIT 7	BIT 6	BIT 5	BIT 4	BIT 3	BIT 2	BIT 1	BIT 0
USS1	USS0	WAS1	WAS0	LET1	LET0	MPT1	MPT0
0	1	0	1	0	0	0	0

Table 48 Description of data byte 6H

BIT	SYMBOL	DESCRIPTION
7 and 6	USS[1:0]	**USN sensitivity for weak signal processing.** See Fig.5.
5 and 4	WAS[1:0]	**WAM sensitivity for weak signal processing.** See Fig.6.
3 and 2	LET[1:0]	**LEVEL detector time constant.** See Table 49.
1 and 0	MPT[1:0]	**MPH detector time constants (level, WAM and USN).** See Table 50.

Table 49 Setting of the time constants of the LEVEL detector

LETF	LET1	LET0	t_{LEVEL} (s)	
			ATTACK	DECAY
0	0	0	3	3
0	0	1	3	6
0	1	0	1.5	1.5
0	1	1	0.5	1.5
1	0	0	0.5	0.5
1	0	1	0.17	0.5
1	1	0	0.06	0.17
1	1	1	0.06	0.06

Table 50 Setting of the time constants of the MPH detector (level, WAM and USN)

MPT1	MPT0	t_{MPH} (s)	
		ATTACK	DECAY
0	0	0.5	12
0	1	0.5	24
1	0	0.5	6
1	1	0.25	6

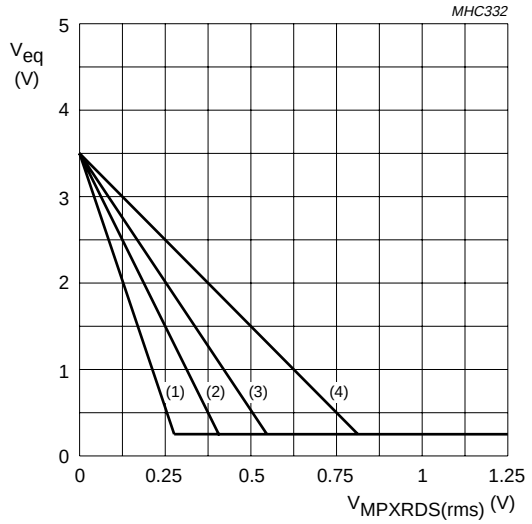

(1) USS[1:0] = 11 = –6 V/0.5 V.
(2) USS[1:0] = 10 = –4 V/0.5 V.
(3) USS[1:0] = 01 = –3 V/0.5 V.
(4) USS[1:0] = 00 = –2 V/0.5 V.

Fig.5 Equivalent level voltage V_{eq} (USN and MPH detector) as a function of MPX signal at 150 kHz.

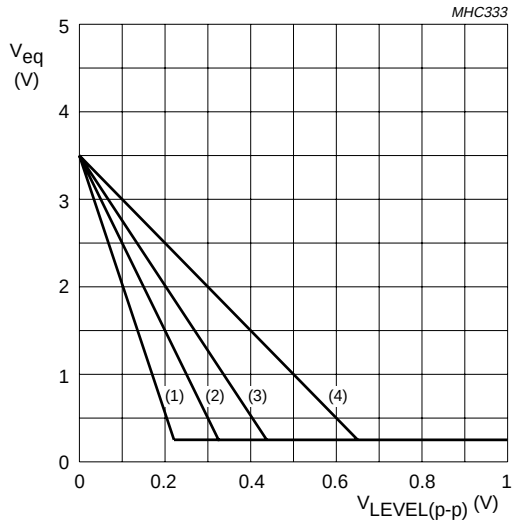

(1) WAS[1:0] = 11 = –6 V/0.4 V.
(2) WAS[1:0] = 10 = –4 V/0.4 V.
(3) WAS[1:0] = 01 = –3 V/0.4 V.
(4) WAS[1:0] = 00 = –2 V/0.4 V.

Fig.6 Equivalent level voltage V_{eq} (WAM and MPH detector) as a function of level input at 21 kHz.

11.2.8 SUBADDRESS 7H; SNC

Table 51 Format of data byte 7H with default setting

BIT 7	BIT 6	BIT 5	BIT 4	BIT 3	BIT 2	BIT 1	BIT 0
SST3	SST2	SST1	SST0	SSL1	SSL0	HCMP	HCSF
0	1	1	1	0	1	0	0

Table 52 Description of data byte 7H

BIT	SYMBOL	DESCRIPTION
7 to 4	SST[3:0]	**Start of the stereo blend SNC.** See Table 53 and Fig.7.
3 and 2	SSL[1:0]	**Slope of the stereo blend SNC.** See Fig.8.
1	HCMP	**High cut control source.** 0 = control by the level (LEV) detector; 1 = control by the multipath (MPH) detector.
0	HCSF	**High cut control minimum bandwidth.** 0 = 2 kHz; 1 = 3 kHz.

Table 53 Start of the stereo blend SNC

SST3	SST2	SST1	SST0	STEREO NOISE CONTROL START VOLTAGE (V)
0	0	0	0	1.88
0	0	0	1	1.94
0	0	1	0	2
0	0	1	1	2.06
0	1	0	0	2.13
0	1	0	1	2.19
0	1	1	0	2.25
0	1	1	1	2.31
1	0	0	0	2.38
1	0	0	1	2.44
1	0	1	0	2.5
1	0	1	1	2.56
1	1	0	0	2.63
1	1	0	1	2.69
1	1	1	0	2.75
1	1	1	1	2.81

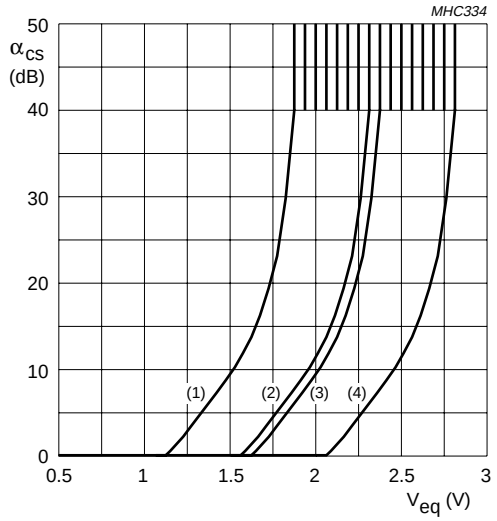

SSL[1:0] = 10
(1) SST[3:0] = 0000.
(2) SST[3:0] = 0111.
(3) SST[3:0] = 1000.
(4) SST[3:0] = 1111.

Fig.7 Channel separation α_{cs} as a function of equivalent level voltage V_{eq} (start).

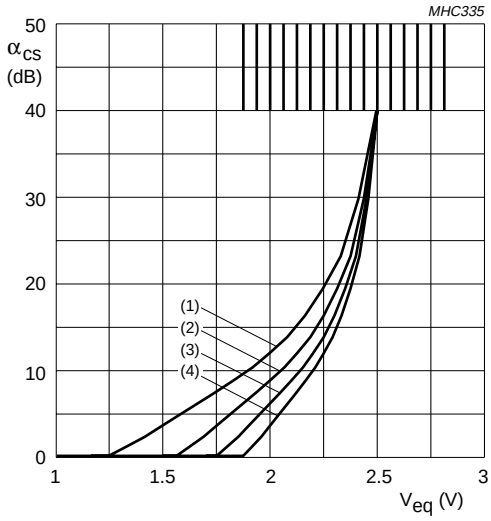

SST[3:0] = 1010
(1) SSL[1:0] = 00 = 38 dB/V.
(2) SSL[1:0] = 01 = 51 dB/V.
(3) SSL[1:0] = 10 = 63 dB/V.
(4) SSL[1:0] = 11 = 72 dB/V.

Fig.8 Channel separation α_{cs} as a function of equivalent level voltage V_{eq} (slope).

11.2.9 SUBADDRESS 8H; HIGHCUT

Table 54 Format of data byte 8H with default setting

BIT 7	BIT 6	BIT 5	BIT 4	BIT 3	BIT 2	BIT 1	BIT 0
HST2	HST1	HST0	HSL1	HSL0	HCF2	HCF1	HCF0
0	1	1	0	1	1	1	1

Table 55 Description of data byte 8H

BIT	SYMBOL	DESCRIPTION
7 to 5	HST[2:0]	**High cut control start (weak signal processing).** See Fig.9.
4 and 3	HSL[1:0]	**High cut control slope (weak signal processing).** See Fig.10.
2 to 0	HCF[2:0]	**Fixed high cut control (maximum HCC bandwidth).** See Table 56 and Fig.11.

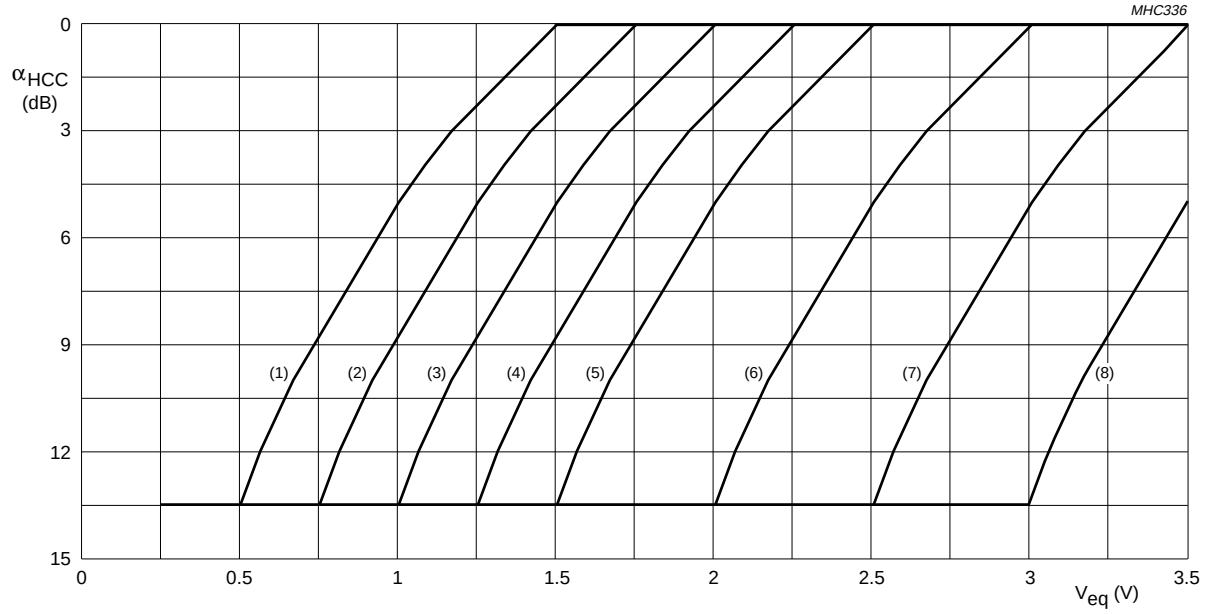

HCF[2:0] = 111, HCSF = 0,
HSL[1:0] = 10 and f_{audio} = 10 kHz

(1) HST[2:0] = 000 = 1.5 V.
(2) HST[2:0] = 001 = 1.75 V.
(3) HST[2:0] = 010 = 2 V.
(4) HST[2:0] = 011 = 2.25 V.
(5) HST[2:0] = 100 = 2.5 V.
(6) HST[2:0] = 101 = 3 V.
(7) HST[2:0] = 110 = 3.5 V.
(8) HST[2:0] = 111 = 4 V.

Fig.9 High cut control attenuation α_{HCC} as a function of equivalent level voltage V_{eq} (start).

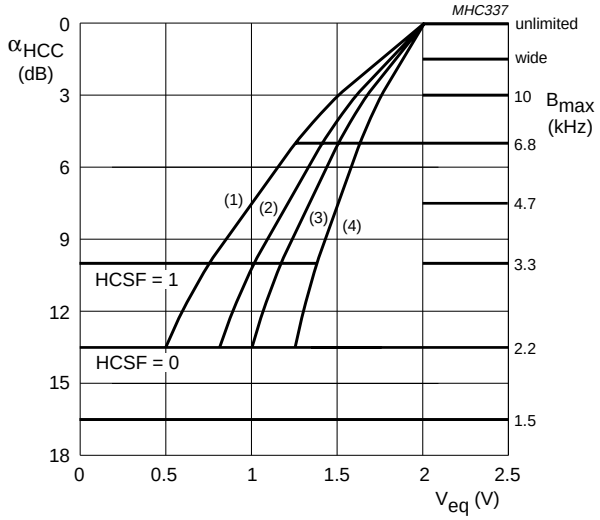

HST[2:0] = 010 and f_{audio} = 10 kHz

(1) HSL[1:0] = 00 = 9 dB/V.

(2) HSL[1:0] = 01 = 11 dB/V.

(3) HSL[1:0] = 10 = 14 dB/V.

(4) HSL[1:0] = 11 = 18 dB/V.

Fig.10 High cut control attenuation α_{HCC} as a function of equivalent level voltage V_{eq} (slope).

Table 56 Fixed high cut control

HCF2	HCF1	HCF0	B_{max} (kHz)
0	0	0	1.5
0	0	1	2.2
0	1	0	3.3
0	1	1	4.7
1	0	0	6.8
1	0	1	10
1	1	0	wide
1	1	1	unlimited

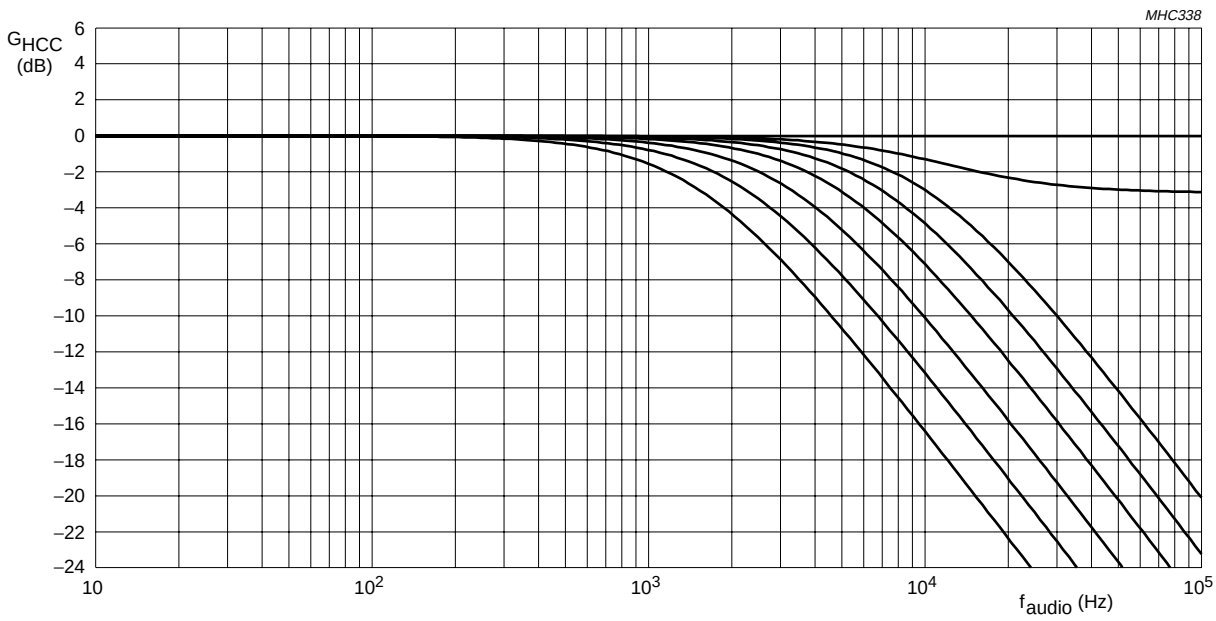

Fig.11 High cut control gain G_{HCC} as a function of audio frequency f_{audio} (fixed HCC).

11.2.10 SUBADDRESS 9H; SOFTMUTE

Table 57 Format of data byte 9H with default setting

BIT 7	BIT 6	BIT 5	BIT 4	BIT 3	BIT 2	BIT 1	BIT 0
MST2	MST1	MST0	MSL1	MSL0	UMD1	UMD0	SMON
0	1	1	0	1	0	1	1

Table 58 Description of data byte 9H

BIT	SYMBOL	DESCRIPTION
7 to 5	MST[2:0]	**Soft mute start.** α_{mute} = 3 dB; see Fig.12.
4 and 3	MSL[1:0]	**Soft mute slope.** See Fig.13.
2 and 1	UMD[1:0]	**USN mute depth.** Maximum soft mute attenuation of the soft mute via USN control; see Fig.14.
0	SMON	**Soft mute enable.** 0 = disable; 1 = enable.

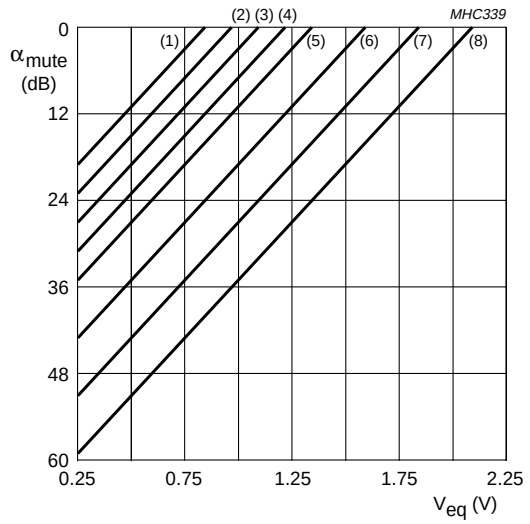

MSL[1:0] = 11.

(1) MST[2:0] = 000 = 0.75 V.
(2) MST[2:0] = 001 = 0.88 V.
(3) MST[2:0] = 010 = 1 V.
(4) MST[2:0] = 011 = 1.12 V.
(5) MST[2:0] = 100 = 1.25 V.
(6) MST[2:0] = 101 = 1.5 V.
(7) MST[2:0] = 110 = 1.75 V.
(8) MST[2:0] = 111 = 2 V.

Fig.12 Soft mute attenuation α_{mute} as a function of equivalent level voltage V_{eq} (start).

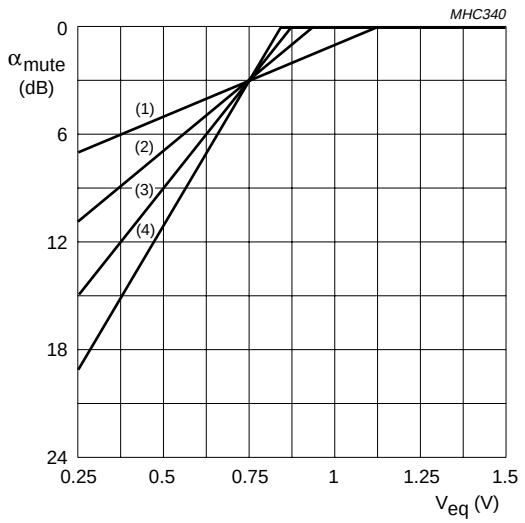

MST[2:0] = 000.

(1) MSL[1:0] = 00 = 8 dB/V.
(2) MSL[1:0] = 01 = 16 dB/V.
(3) MSL[1:0] = 10 = 24 dB/V.
(4) MSL[1:0] = 11 = 32 dB/V.

Fig.13 Soft mute attenuation α_{mute} as a function of equivalent level voltage V_{eq} (slope).

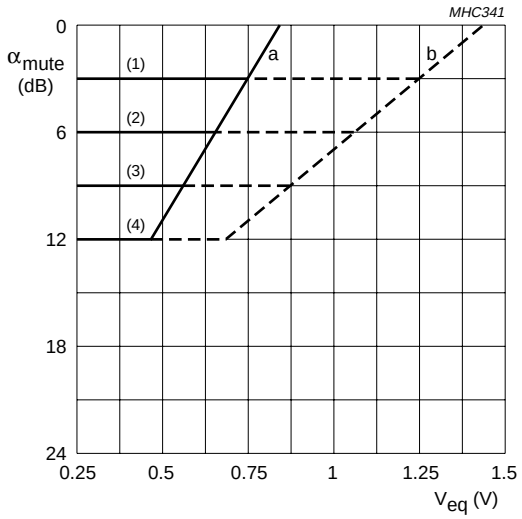

a. MST[2:0] = 000, MSL[1:0] = 11
b. MST[2:0] = 100, MSL[1:0] = 01
(1) UMD[1:0] = 00 = 3 dB.
(2) UMD[1:0] = 01 = 6 dB.
(3) UMD[1:0] = 10 = 9 dB.
(4) UMD[1:0] = 11 = 12 dB.

Fig.14 Soft mute depth α_{mute} caused by ultrasonic noise.

11.2.11 SUBADDRESS AH; RADIO

Table 59 Format of data byte AH with default setting

BIT 7	BIT 6	BIT 5	BIT 4	BIT 3	BIT 2	BIT 1	BIT 0
AM	MONO	DEMP	ING1	ING0	SEAR	NBS1	NBS0
0	0	1	0	0	1	1	0

Table 60 Description of data byte AH

BIT	SYMBOL	DESCRIPTION
7	AM	**AM selection.** 0 = FM mode selected; 1 = AM mode selected.
6	MONO	**Stereo decoder mono.** 0 = set to FM stereo; 1 = set to FM mono.
5	DEMP	**De-emphasis time constant.** 0 = 75 µs; 1 = 50 µs; see Fig.15.
4 and 3	ING[1:0]	**Input gain.** See Table 61.
2	SEAR	**LEVEL and MPH detector time constant.** 0 = standard time constant selected; 1 = fast time constant of 60 ms selected.
1 and 0	NBS[1:0]	**AM noise blanker and the FM noise blanker MPX sensitivity.** See Table 62.

Table 61 Input gain

ING1	ING0	GAIN FOR FMMPX INPUT (dB)	GAIN FOR AM AND MPXRDS INPUT (dB)
0	0	0	0
0	1	3	3
1	0	6	6
1	1	23.5	0

Table 62 Noise blanker sensitivity

NBS1	NBS0	SENSITIVITY OF FM NOISE BLANKER AT MPXRDS INPUT (mV)	SENSITIVITY OF AM NOISE BLANKER (%)
0	0	90	110
0	1	150	140
1	0	210	175
1	1	270	220

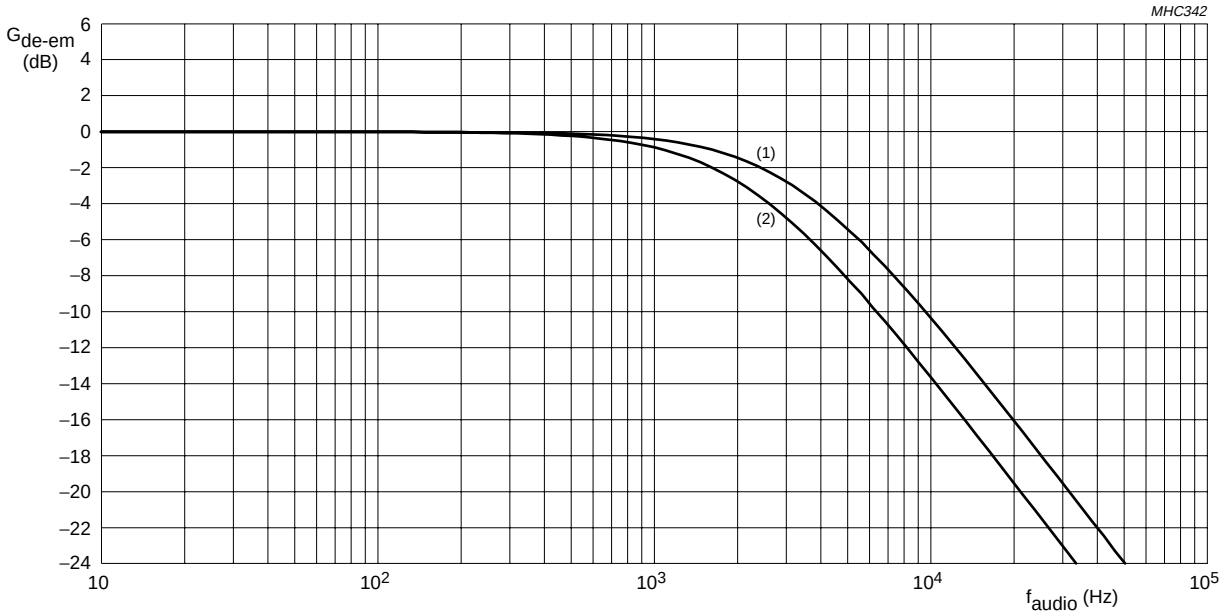

(1) $\tau_{de\text{-}em}$ = 50 µs.
(2) $\tau_{de\text{-}em}$ = 75 µs.

Fig.15 De-emphasis gain $G_{de\text{-}em}$ as a function of audio frequency f_{audio}.

11.2.12 SUBADDRESS BH; INPUT AND ASI

Table 63 Format of data byte BH with default setting

BIT 7	BIT 6	BIT 5	BIT 4	BIT 3	BIT 2	BIT 1	BIT 0
NBL1	NBL0	INP1	INP0	MUTE	ASI	AST1	AST0
1	0	0	0	1	1	0	0

Table 64 Description of data byte BH

BIT	SYMBOL	DESCRIPTION
7 and 6	NBL[1:0]	**FM noise blanker level sensitivity.** See Table 65.
5 and 4	INP[1:0]	**Audio input tone/volume part.** See Table 66.
3	MUTE	**Audio mute.** 0 = no mute; 1 = mute.
2	ASI	**Audio step interpolation.** 0 = disable; 1 = enable.
1 and 0	AST[1:0]	**Audio step interpolation time constant.** ASI time is 0 s when ASI = 0; see Table 67.

Table 65 FM noise blanker level sensitivity

NBL1	NBL0	SENSITIVITY OF FM NOISE BLANKER AT LEVEL INPUT (mV)
0	0	9
0	1	18
1	0	28
1	1	reserved

Table 66 Audio input tone/volume part

INP1	INP0	AUDIO INPUT FOR TONE/VOLUME PART
0	0	radio
0	1	CD
1	0	tape
1	1	phone

Table 67 Audio step interpolation time constant

AST1	AST0	ASI TIME (ms)
0	0	1
0	1	3
1	0	10
1	1	30

11.2.13 SUBADDRESS CH; LOUDNESS

Table 68 Format of data byte CH with default setting

BIT 7	BIT 6	BIT 5	BIT 4	BIT 3	BIT 2	BIT 1	BIT 0
–	LDN4	LDN3	LDN2	LDN1	LDN0	LLF	LHB
–	0	0	0	0	0	1	1

Table 69 Description of data byte CH, see Figs 16 to 19

BIT	SYMBOL	DESCRIPTION
7	–	Not used. Set to logic 0.
6 to 2	LDN[4:0]	**Loudness gain.** See Table 70.
1	LLF	**Loudness low boost frequency.** 0 = 50 Hz; 1 = 100 Hz.
0	LHB	**Loudness high boost enable.** 0 = loudness low boost is enabled; 1 = loudness low boost and loudness high boost are enabled.

Table 70 Loudness gain

LDN4	LDN3	LDN2	LDN1	LDN0	LOUDNESS CONTROL (dB)
0	0	0	0	0	0
0	0	0	0	1	–1
0	0	0	1	0	–2
:	:	:	:	:	:
1	0	0	1	0	–18
1	0	0	1	1	–19
1	0	1	0	0	–20

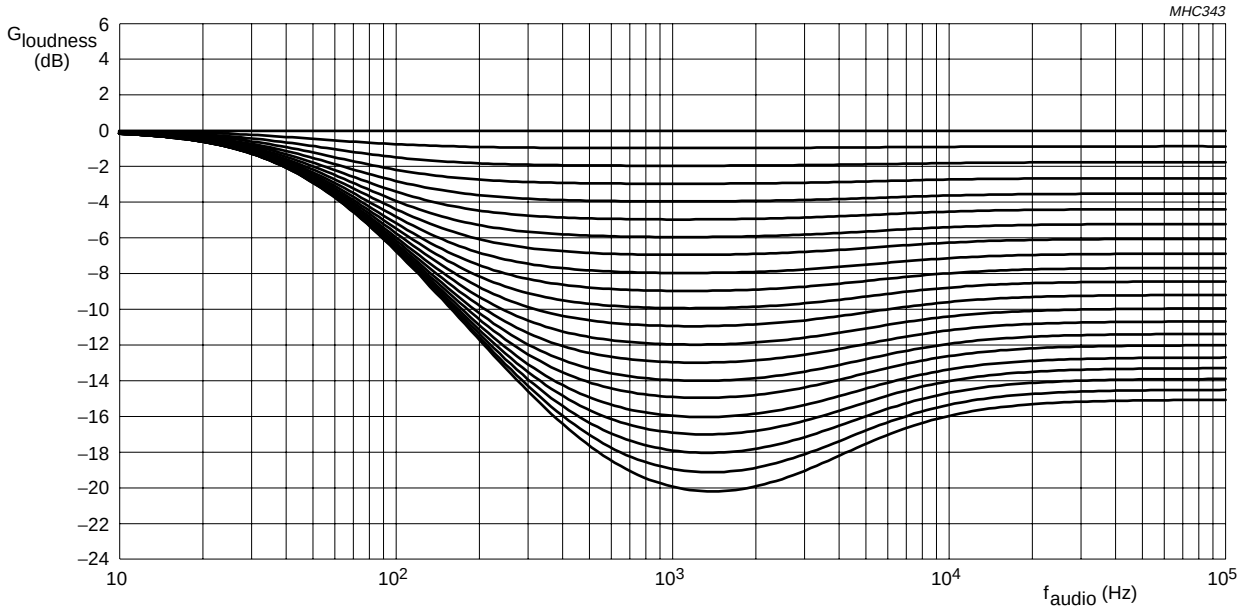

Fig.16 Loudness gain $G_{loudness}$ as a function of audio frequency f_{audio}; low boost frequency 50 Hz and high boost on.

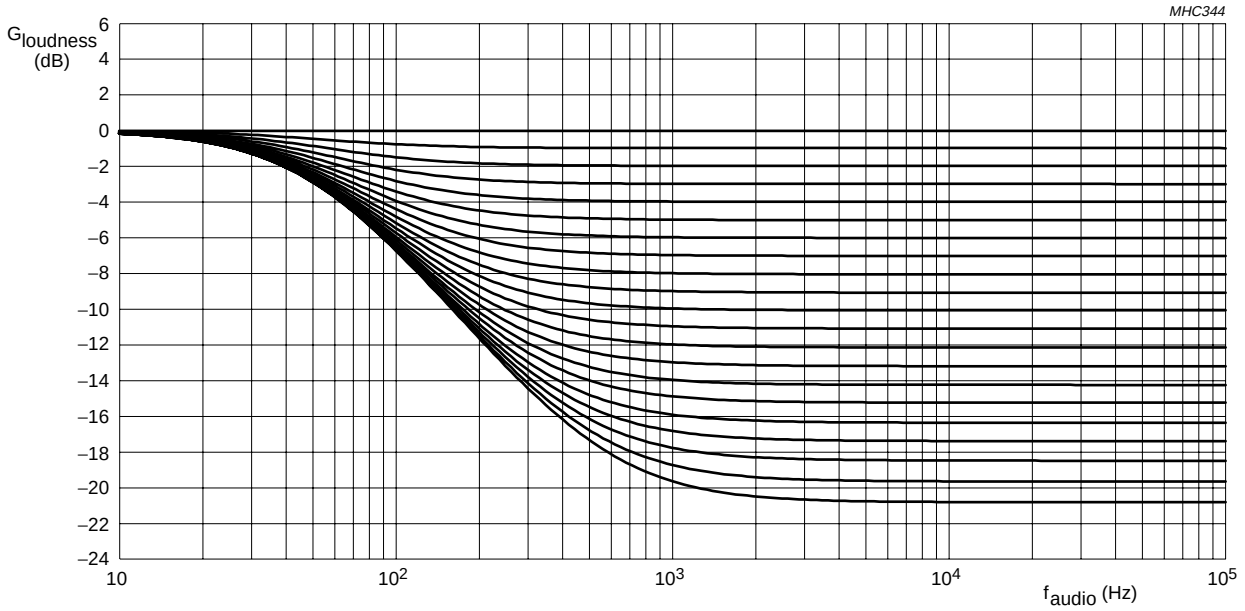

Fig.17 Loudness gain $G_{loudness}$ as a function of audio frequency f_{audio}; low boost frequency 50 Hz and high boost off.

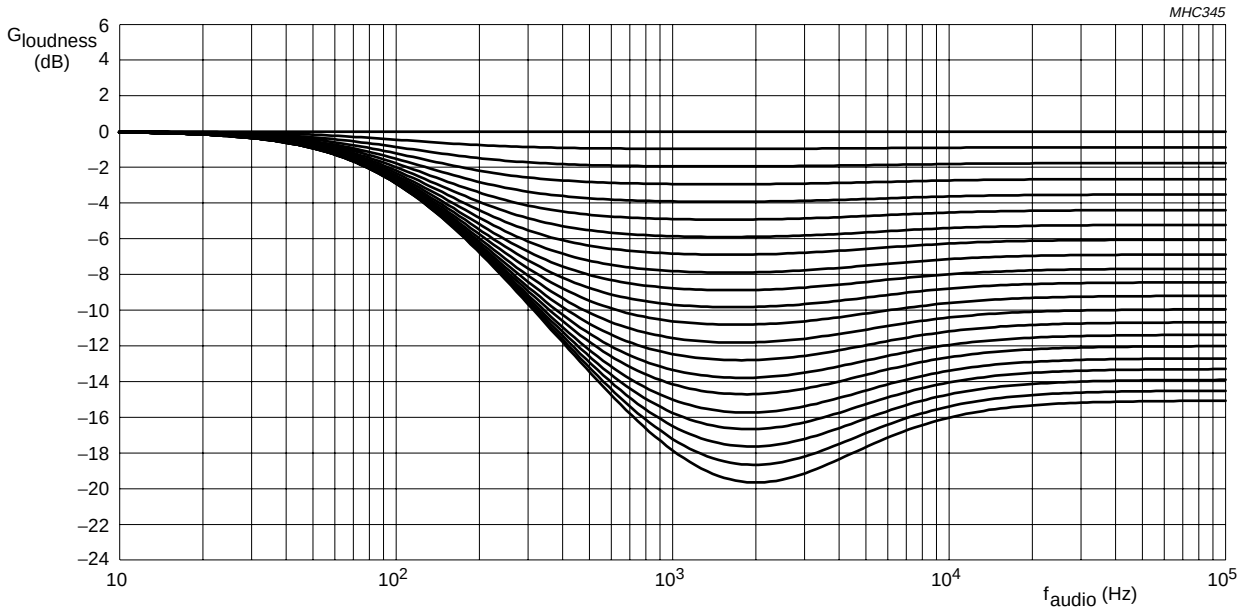

Fig.18 Loudness gain $G_{loudness}$ as a function of audio frequency f_{audio}; low boost frequency 100 Hz and high boost on.

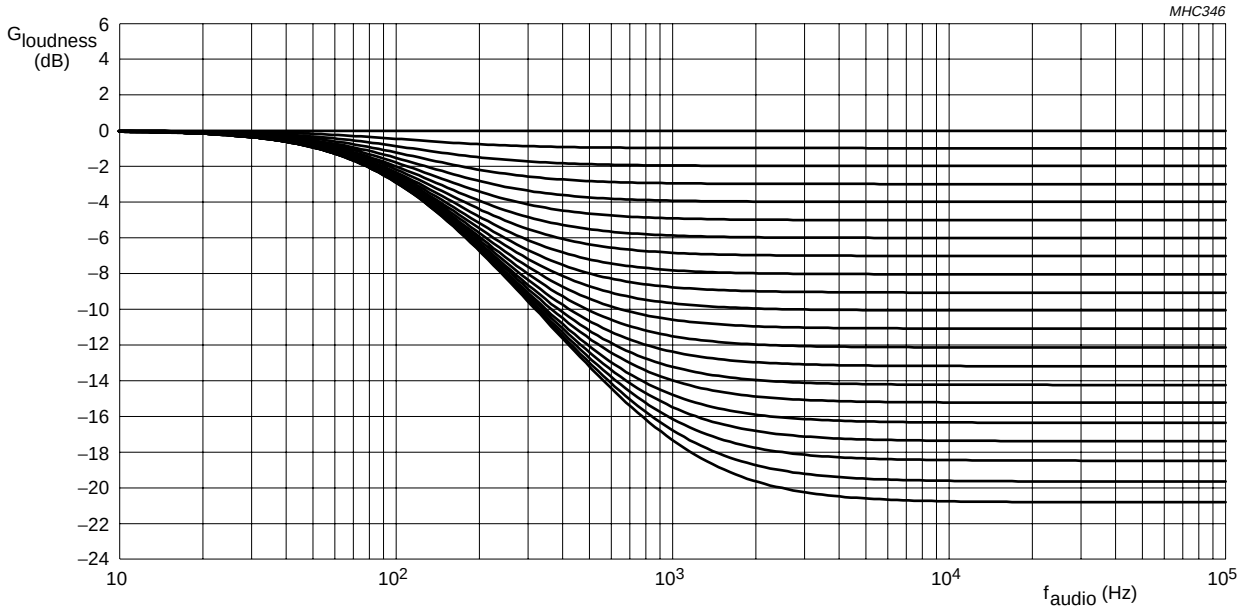

Fig.19 Loudness gain $G_{loudness}$ as a function of audio frequency f_{audio}; low boost frequency 100 Hz and high boost off.

11.2.14 SUBADDRESS DH; VOLUME

Table 71 Format of data byte DH with default setting

BIT 7	BIT 6	BIT 5	BIT 4	BIT 3	BIT 2	BIT 1	BIT 0
–	VOL6	VOL5	VOL4	VOL3	VOL2	VOL1	VOL0
–	0	1	0	0	0	0	0

Table 72 Description of data byte DH

BIT	SYMBOL	DESCRIPTION
7	–	Not used. Set to logic 0.
6 to 0	VOL[6:0]	**Volume setting.** See Table 73.

Table 73 Volume setting

VOL6	VOL5	VOL4	VOL3	VOL2	VOL1	VOL0	GAIN (dB)
0	0	0	1	1	0	0	20
0	0	0	1	1	0	1	19
0	0	0	1	1	1	0	18
:	:	:	:	:	:	:	:
0	0	1	1	1	1	0	2
0	0	1	1	1	1	1	1
0	1	0	0	0	0	0	0

VOL6	VOL5	VOL4	VOL3	VOL2	VOL1	VOL0	GAIN (dB)
0	1	0	0	0	0	1	–1
0	1	0	0	0	1	0	–2
:	:	:	:	:	:	:	:
1	0	1	1	0	1	0	–58
1	0	1	1	0	1	1	–59
1	0	1	1	1	0	0	mute

11.2.15 SUBADDRESS EH; TREBLE

Table 74 Format of data byte EH with default setting

BIT 7	BIT 6	BIT 5	BIT 4	BIT 3	BIT 2	BIT 1	BIT 0
–	TRE2	TRE1	TRE0	TREM	TRF1	TRF0	–
–	0	0	0	1	0	1	–

Table 75 Description of data byte EH, see Fig.20

BIT	SYMBOL	DESCRIPTION
7	–	Not used. Set to logic 0.
6 to 4	TRE[2:0]	**Treble gain.** See Table 76.
3	TREM	**Treble attenuation or gain.** 0 = attenuation; 1 = gain; see Table 76.
2 and 1	TRF[1:0]	**Treble frequency.** See Table 77.
0	–	Not used. Set to logic 0.

Table 76 Treble gain

TRE2	TRE1	TRE0	TREM	TREBLE CONTROL (dB)
1	1	1	1	14
1	1	0	1	12
1	0	1	1	10
1	0	0	1	8
0	1	1	1	6
0	1	0	1	4
0	0	1	1	2
0	0	0	1	0
0	0	0	0	0
0	0	1	0	–2
0	1	0	0	–4
0	1	1	0	–6
1	0	0	0	–8
1	0	1	0	–10
1	1	0	0	–12
1	1	1	0	–14

Table 77 Treble frequency

TRF1	TRF0	TREBLE FREQUENCY (kHz)
0	0	8
0	1	10
1	0	12
1	1	15

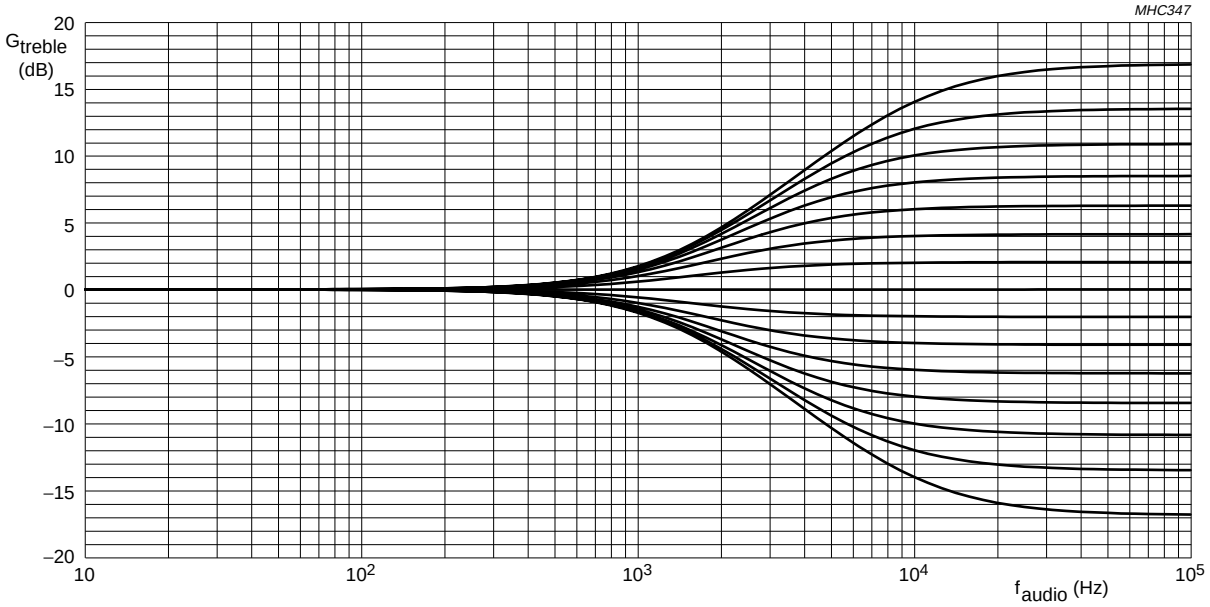

Fig.20 Treble gain G_{treble} as a function of audio frequency f_{audio}, f_{treble} = 10 kHz.

11.2.16 SUBADDRESS FH; BASS

Table 78 Format of data byte FH with default setting

BIT 7	BIT 6	BIT 5	BIT 4	BIT 3	BIT 2	BIT 1	BIT 0
–	BAS2	BAS1	BAS0	BASM	BAF1	BAF0	BASH
–	0	0	0	1	1	0	0

Table 79 Description of data byte FH, see Figs 21 and 22

BIT	SYMBOL	DESCRIPTION
7	–	Not used. Set to logic 0.
6 to 4	BAS[2:0]	**Bass gain.** See Table 80.
3	BASM	**Bass attenuation or gain.** 0 = attenuation; 1 = gain; see Table 80.
2 and 1	BAF[1:0]	**Bass frequency.** See Table 81.
0	BASH	**Bass frequency response.** 0 = band-pass; 1 = shelve curve (only guaranteed for BASM = 0).

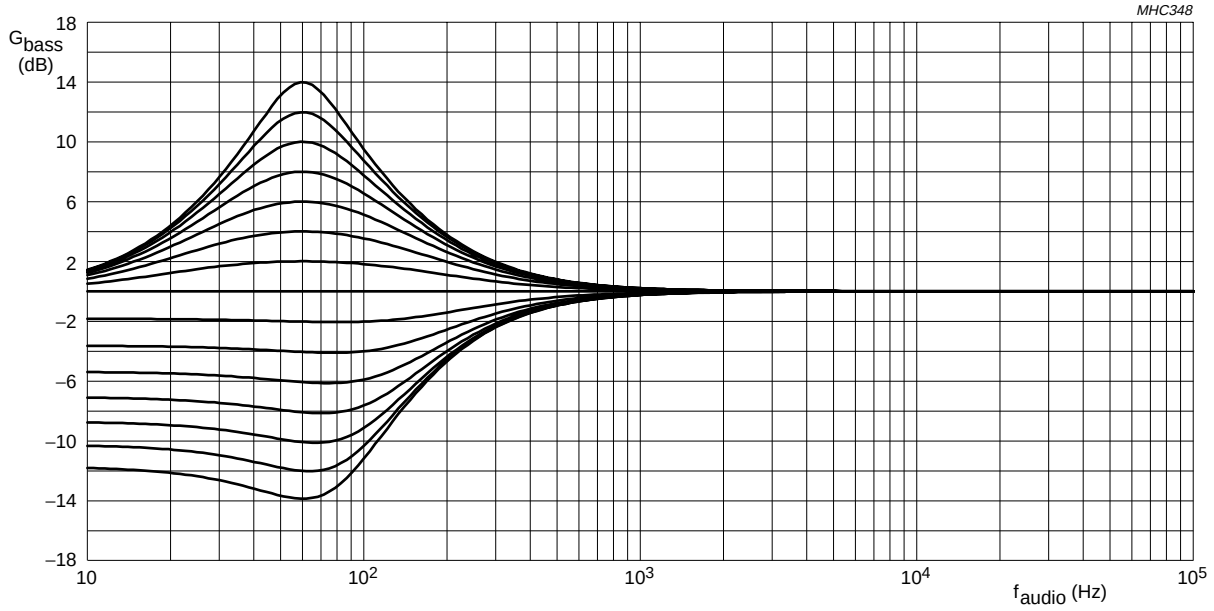

Fig.21 Bass gain G_{bass} as a function of audio frequency f_{audio}; bass frequency 60 Hz, band-pass boost and shelve cut.

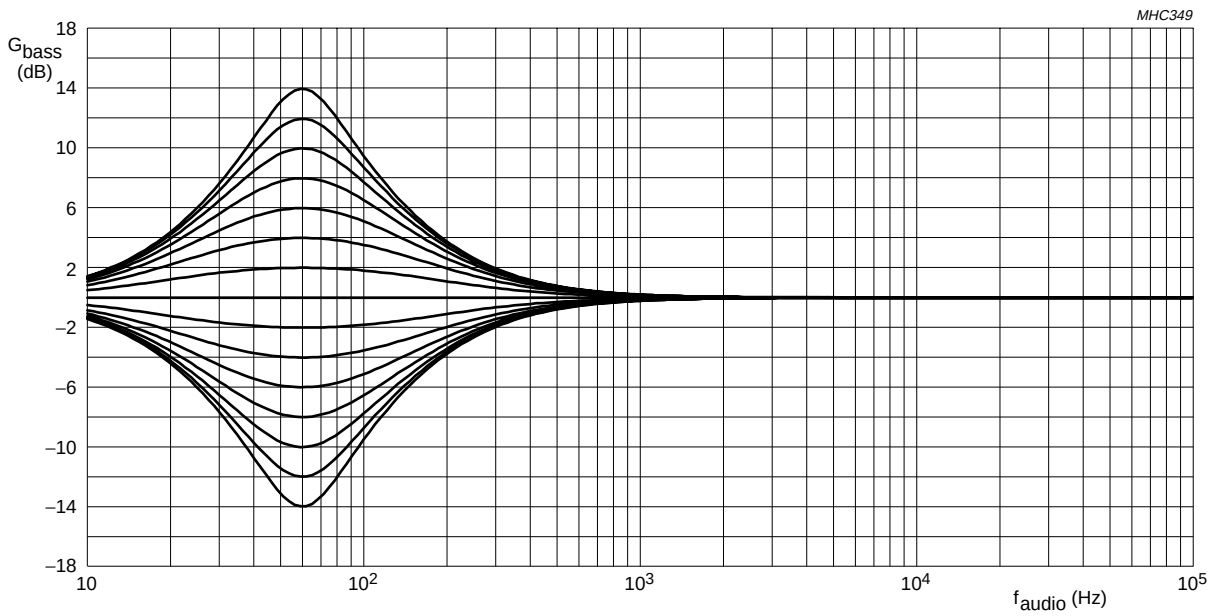

Fig.22 Bass gain G_{bass} as a function of audio frequency f_{audio}; bass frequency 60 Hz, band-pass boost and band-pass cut.

Table 80 Bass gain

BAS2	BAS1	BAS0	BASM	BASS CONTROL (dB)
1	1	1	1	14
1	1	0	1	12
1	0	1	1	10
1	0	0	1	8
0	1	1	1	6
0	1	0	1	4
0	0	1	1	2
0	0	0	1	0
0	0	0	0	0
0	0	1	0	–2
0	1	0	0	–4
0	1	1	0	–6
1	0	0	0	–8
1	0	1	0	–10
1	1	0	0	–12
1	1	1	0	–14

Table 81 Bass frequency

BAF1	BAF0	BASS FREQUENCY (Hz)
0	0	60
0	1	80
1	0	100
1	1	120

11.2.17 SUBADDRESS 10H; FADER

Table 82 Format of data byte 10H with default setting

BIT 7	BIT 6	BIT 5	BIT 4	BIT 3	BIT 2	BIT 1	BIT 0
–	–	FAD4	FAD3	FAD2	FAD1	FAD0	FADM
–	–	0	0	0	0	0	1

Table 83 Description of data byte 10H

BIT	SYMBOL	DESCRIPTION
7 and 6	–	Not used. Set to logic 0.
5 to 1	FAD[4:0]	**Fader gain.** See Table 84.
0	FADM	**Fader gain mode.** 0 = front output attenuated; 1 = rear output attenuated.

Table 84 Fader gain

FAD4	FAD3	FAD2	FAD1	FAD0	FADER CONTROL (dB)
0	0	0	0	0	0
0	0	0	0	1	–1
0	0	0	1	0	–2
:	:	:	:	:	:
0	1	1	1	0	–14
0	1	1	1	1	–15
1	0	0	0	0	–17.5
1	0	0	0	1	–20
:	:	:	:	:	:
1	1	0	1	0	–42.5
1	1	0	1	1	–45
1	1	1	0	0	–48
1	1	1	0	1	–51
1	1	1	1	0	–55
1	1	1	1	1	–59

11.2.18 SUBADDRESS 11H; BALANCE

Table 85 Format of data byte 11H with default setting

BIT 7	BIT 6	BIT 5	BIT 4	BIT 3	BIT 2	BIT 1	BIT 0
BAL6	BAL5	BAL4	BAL3	BAL2	BAL1	BAL0	BALM
0	0	0	0	0	0	0	1

Table 86 Description of data byte 11H

BIT	SYMBOL	DESCRIPTION
7 to 1	BAL[6:0]	**Balance gain.** See Table 87.
0	BALM	**Balance gain mode.** 0 = left channel attenuated; 1 = right channel attenuated.

Table 87 Balance gain

BAL6	BAL5	BAL4	BAL3	BAL2	BAL1	BAL0	BALANCE CONTROL (dB)
0	0	0	0	0	0	0	0
0	0	0	0	0	0	1	–1
0	0	0	0	0	1	0	–2
:	:	:	:	:	:	:	:
1	0	0	1	1	0	1	–77
1	0	0	1	1	1	0	–78
1	0	0	1	1	1	1	–79
1	0	1	0	0	0	0	mute

11.2.19 SUBADDRESS 12H; MIX

Table 88 Format of data byte 12H with default setting

BIT 7	BIT 6	BIT 5	BIT 4	BIT 3	BIT 2	BIT 1	BIT 0
MILF	MIRF	MILR	MIRR	MULF	MURF	MULR	MURR
0	0	0	0	1	1	1	1

Table 89 Description of data byte 12H

BIT	SYMBOL	DESCRIPTION
7	MILF	**Mixer left front LFOUT.** 0 = no mix; 1 = mix with NAV input and BEEP.
6	MIRF	**Mixer right front RFOUT.** 0 = no mix; 1 = mix with NAV input and BEEP.
5	MILR	**Mixer left rear LROUT.** 0 = no mix; 1 = mix with NAV input and BEEP.
4	MIRR	**Mixer right rear RROUT.** 0 = no mix; 1 = mix with NAV input and BEEP.
3	MULF	**Mutes left front LFOUT.** 0 = no mute; 1 = mute except for NAV input and BEEP.
2	MURF	**Mutes right front RFOUT.** 0 = no mute; 1 = mute except for NAV input and BEEP.
1	MULR	**Mutes left rear LROUT.** 0 = no mute; 1 = mute except for NAV input and BEEP.
0	MURR	**Mutes right rear RROUT.** 0 = no mute; 1 = mute except for NAV input and BEEP.

11.2.20 SUBADDRESS 13H; BEEP

Table 90 Format of data byte 13H with default setting

BIT 7	BIT 6	BIT 5	BIT 4	BIT 3	BIT 2	BIT 1	BIT 0
BEL2	BEL1	BEL0	BEF1	BEF0	NAV	–	–
0	0	0	0	0	0	–	–

Table 91 Description of data byte 13H

BIT	SYMBOL	DESCRIPTION
7 to 5	BEL[2:0]	**Beep level.** See Table 92.
4 and 3	BEF[1:0]	**Beep frequency.** See Table 93.
2	NAV	**Mute NAV.** 0 = mute; 1 = no mute.
1 and 0	–	Not used. Set to logic 0.

Table 92 Beep level

BEL2	BEL1	BEL0	BEEP LEVEL (mV)
0	0	0	mute
0	0	1	13
0	1	0	18
0	1	1	28
1	0	0	44
1	0	1	60
1	1	0	90
1	1	1	150

Table 93 Beep frequency

BEF1	BEF0	BEEP FREQUENCY (Hz)
0	0	500
0	1	1000
1	0	2000
1	1	3000

11.2.21 SUBADDRESS 1FH; AUTOGATE

Table 94 Format of data byte 1FH with default setting

BIT 7	BIT 6	BIT 5	BIT 4	BIT 3	BIT 2	BIT 1	BIT 0
AGA6	AGA5	AGA4	AGA3	AGA2	AGA1	AGA0	AGOF
–	–	–	–	–	–	–	1

Table 95 Description of data byte 1FH

BIT	SYMBOL	DESCRIPTION
7 to 1	AGA[6:0]	**I²C-bus device address definition.** These bits define the I²C-bus device address definition for the automatic control of the I²C-bus loop through gate. The subaddress auto-increment function reverts from SA = 30 to SA = 0, excluding the AUTOGATE byte (SA = 31). The AUTOGATE byte can only be accessed via direct subaddress selection of SA = 31, in which case auto-increment will revert to SA = 0.
0	AGOF	**Autogate function enable.** 0 = enable; 1 = disable [The autogate function is not compatible with the TEA684x tuner devices. For the TEA684x the use of the shortgate (SGAT) function is advised].

12 TEST AND APPLICATION INFORMATION

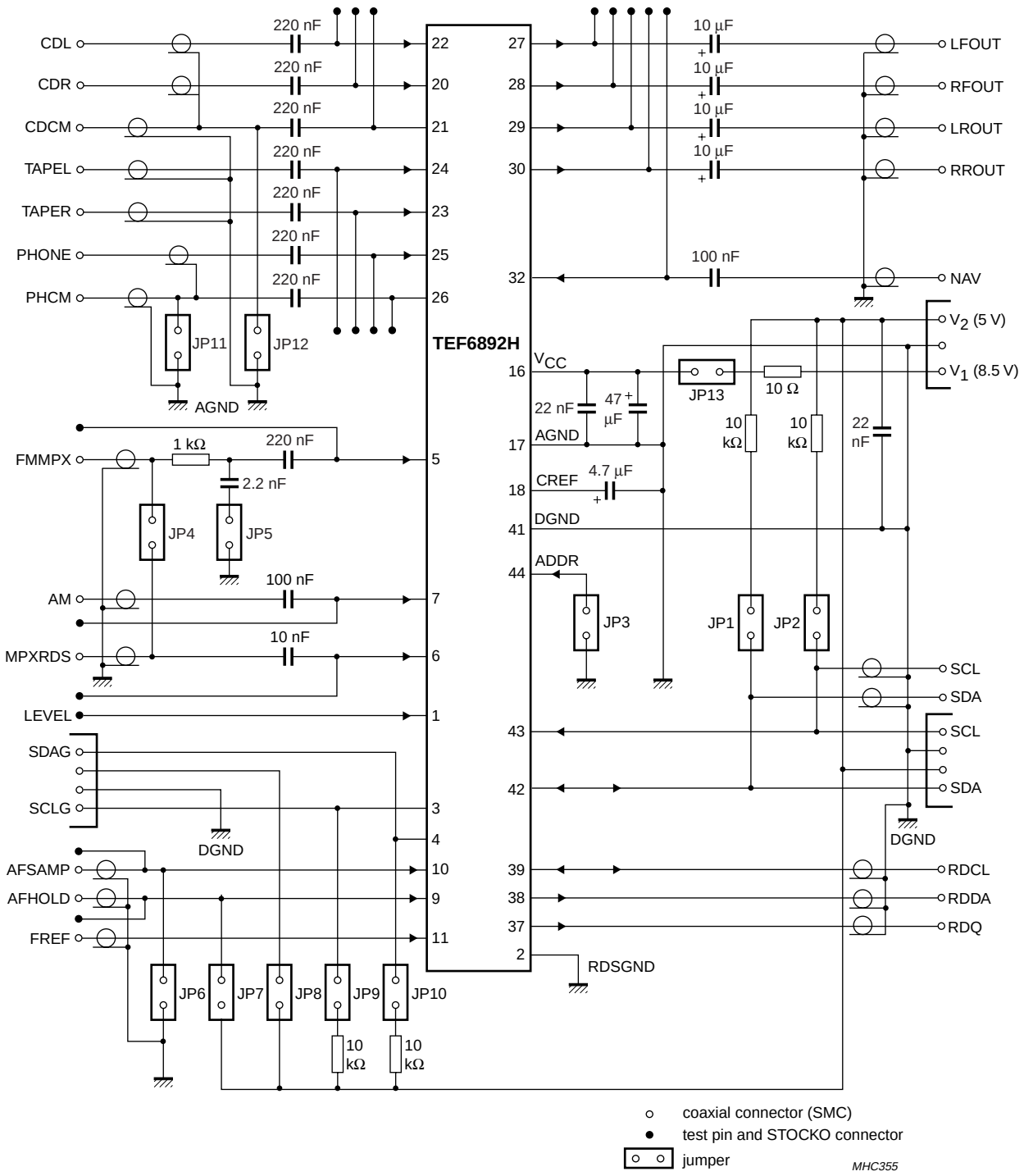

Fig.23 Test circuit.

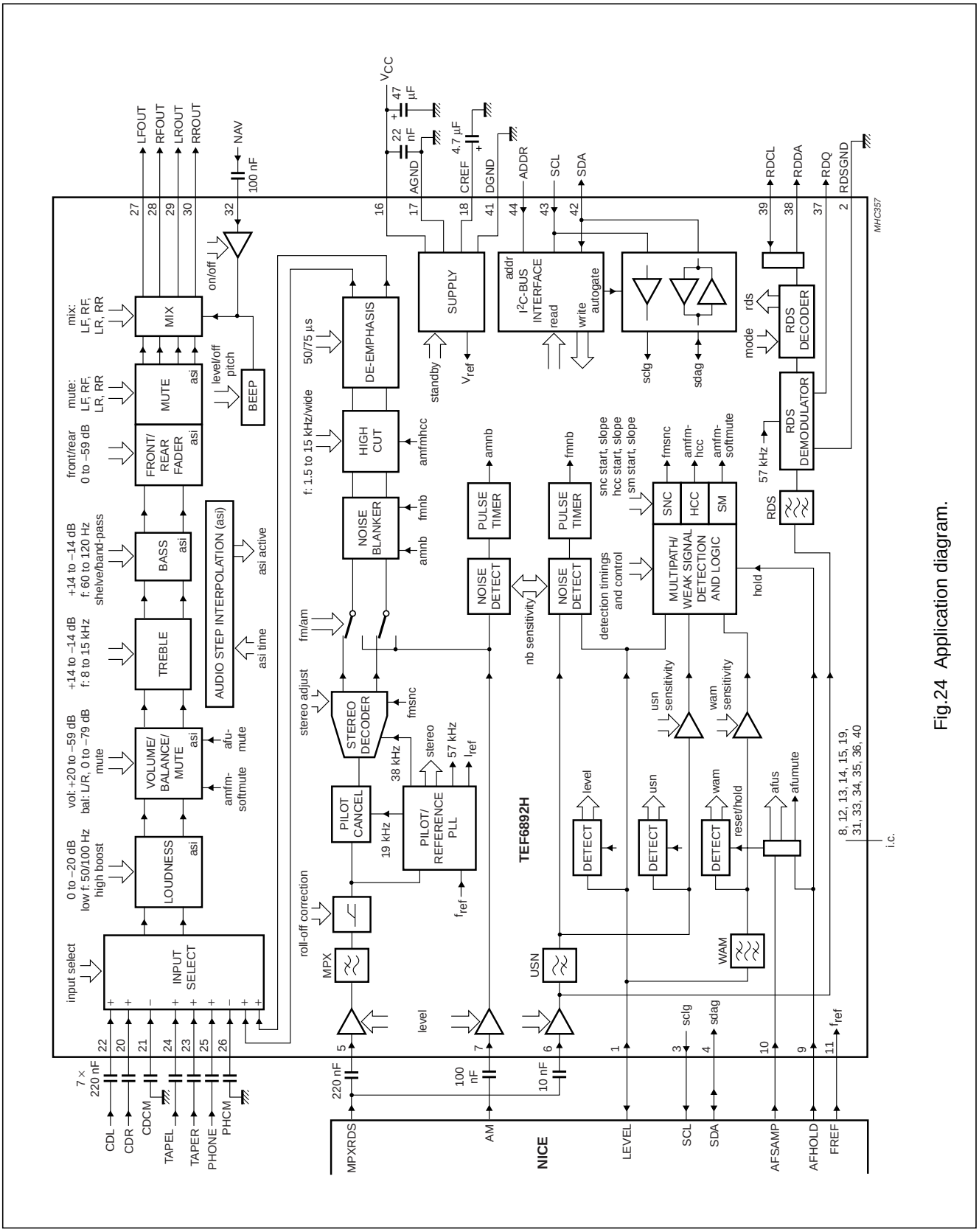

Fig.24 Application diagram.

13 PACKAGE OUTLINE

QFP44: plastic quad flat package; 44 leads (lead length 1.3 mm); body 10 x 10 x 1.75 mm **SOT307-2**

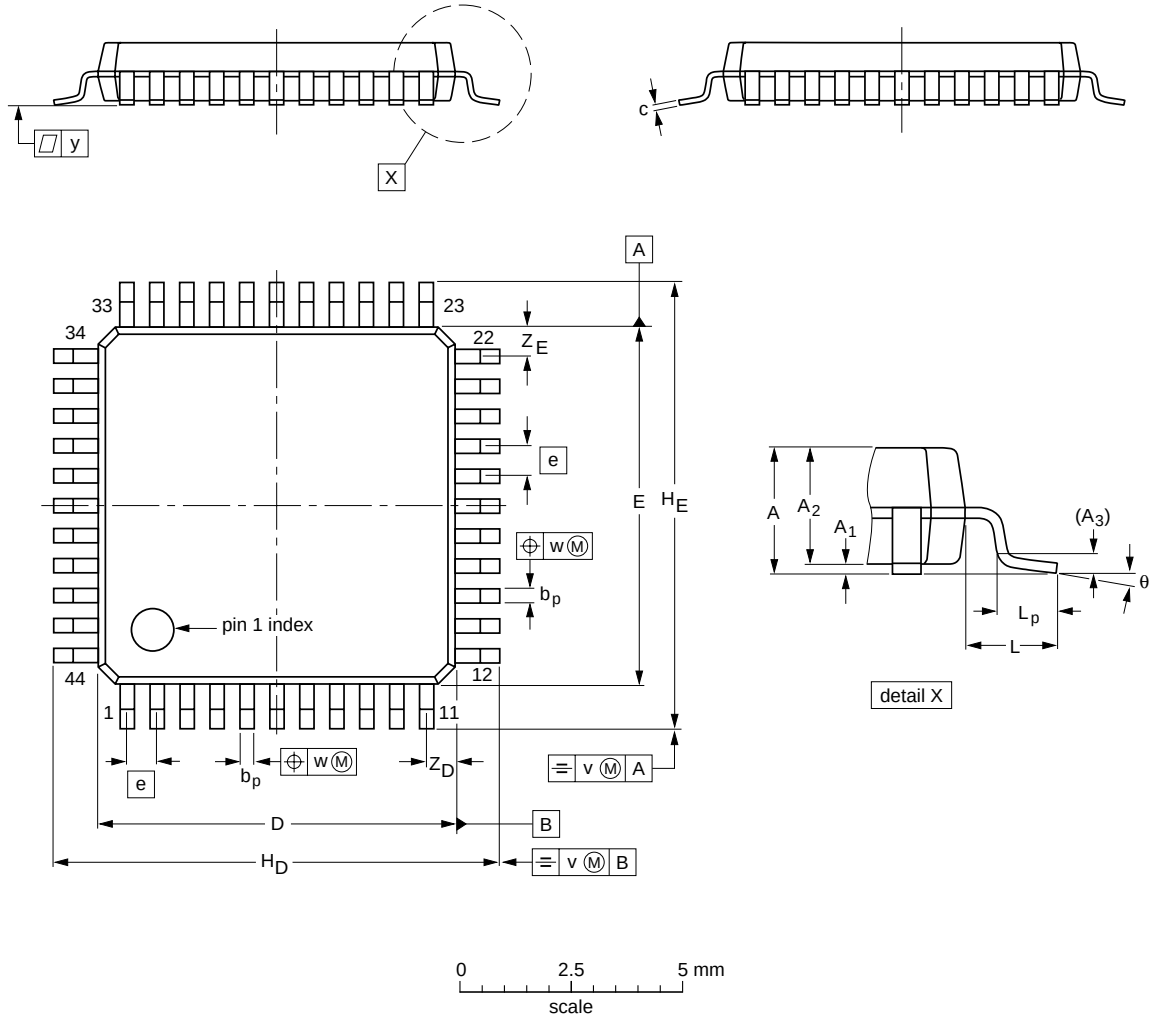

DIMENSIONS (mm are the original dimensions)

UNIT	A max.	A_1	A_2	A_3	b_p	c	D(1)	E(1)	e	H_D	H_E	L	L_p	v	w	y	Z_D(1)	Z_E(1)	θ
mm	2.1	0.25 0.05	1.85 1.65	0.25	0.4 0.2	0.25 0.14	10.1 9.9	10.1 9.9	0.8	12.9 12.3	12.9 12.3	1.3	0.95 0.55	0.15	0.15	0.1	1.2 0.8	1.2 0.8	10° 0°

Note

1. Plastic or metal protrusions of 0.25 mm maximum per side are not included.

OUTLINE VERSION	REFERENCES				EUROPEAN PROJECTION	ISSUE DATE
	IEC	JEDEC	JEITA			
SOT307-2						~~97-08-01~~ 03-02-25

14 SOLDERING

14.1 Introduction to soldering surface mount packages

This text gives a very brief insight to a complex technology. A more in-depth account of soldering ICs can be found in our *"Data Handbook IC26; Integrated Circuit Packages"* (document order number 9398 652 90011).

There is no soldering method that is ideal for all surface mount IC packages. Wave soldering can still be used for certain surface mount ICs, but it is not suitable for fine pitch SMDs. In these situations reflow soldering is recommended.

14.2 Reflow soldering

Reflow soldering requires solder paste (a suspension of fine solder particles, flux and binding agent) to be applied to the printed-circuit board by screen printing, stencilling or pressure-syringe dispensing before package placement. Driven by legislation and environmental forces the worldwide use of lead-free solder pastes is increasing.

Several methods exist for reflowing; for example, convection or convection/infrared heating in a conveyor type oven. Throughput times (preheating, soldering and cooling) vary between 100 and 200 seconds depending on heating method.

Typical reflow peak temperatures range from 215 to 270 °C depending on solder paste material. The top-surface temperature of the packages should preferably be kept:

- below 225 °C (SnPb process) or below 245 °C (Pb-free process)
  - for all BGA and SSOP-T packages
  - for packages with a thickness ≥ 2.5 mm
  - for packages with a thickness < 2.5 mm and a volume ≥ 350 mm^3 so called thick/large packages.
- below 240 °C (SnPb process) or below 260 °C (Pb-free process) for packages with a thickness < 2.5 mm and a volume < 350 mm^3 so called small/thin packages.

Moisture sensitivity precautions, as indicated on packing, must be respected at all times.

14.3 Wave soldering

Conventional single wave soldering is not recommended for surface mount devices (SMDs) or printed-circuit boards with a high component density, as solder bridging and non-wetting can present major problems.

To overcome these problems the double-wave soldering method was specifically developed.

If wave soldering is used the following conditions must be observed for optimal results:

- Use a double-wave soldering method comprising a turbulent wave with high upward pressure followed by a smooth laminar wave.
- For packages with leads on two sides and a pitch (e):
  - larger than or equal to 1.27 mm, the footprint longitudinal axis is **preferred** to be parallel to the transport direction of the printed-circuit board;
  - smaller than 1.27 mm, the footprint longitudinal axis **must** be parallel to the transport direction of the printed-circuit board.

  The footprint must incorporate solder thieves at the downstream end.
- For packages with leads on four sides, the footprint must be placed at a 45° angle to the transport direction of the printed-circuit board. The footprint must incorporate solder thieves downstream and at the side corners.

During placement and before soldering, the package must be fixed with a droplet of adhesive. The adhesive can be applied by screen printing, pin transfer or syringe dispensing. The package can be soldered after the adhesive is cured.

Typical dwell time of the leads in the wave ranges from 3 to 4 seconds at 250 °C or 265 °C, depending on solder material applied, SnPb or Pb-free respectively.

A mildly-activated flux will eliminate the need for removal of corrosive residues in most applications.

14.4 Manual soldering

Fix the component by first soldering two diagonally-opposite end leads. Use a low voltage (24 V or less) soldering iron applied to the flat part of the lead. Contact time must be limited to 10 seconds at up to 300 °C.

When using a dedicated tool, all other leads can be soldered in one operation within 2 to 5 seconds between 270 and 320 °C.

14.5 Suitability of surface mount IC packages for wave and reflow soldering methods

PACKAGE[1]	SOLDERING METHOD	
	WAVE	REFLOW[2]
BGA, LBGA, LFBGA, SQFP, SSOP-T[3], TFBGA, VFBGA	not suitable	suitable
DHVQFN, HBCC, HBGA, HLQFP, HSQFP, HSOP, HTQFP, HTSSOP, HVQFN, HVSON, SMS	not suitable[4]	suitable
PLCC[5], SO, SOJ	suitable	suitable
LQFP, QFP, TQFP	not recommended[5][6]	suitable
SSOP, TSSOP, VSO, VSSOP	not recommended[7]	suitable
PMFP[8]	not suitable	not suitable

Notes

1. For more detailed information on the BGA packages refer to the *"(LF)BGA Application Note*" (AN01026); order a copy from your Philips Semiconductors sales office.
2. All surface mount (SMD) packages are moisture sensitive. Depending upon the moisture content, the maximum temperature (with respect to time) and body size of the package, there is a risk that internal or external package cracks may occur due to vaporization of the moisture in them (the so called popcorn effect). For details, refer to the Drypack information in the *"Data Handbook IC26; Integrated Circuit Packages; Section: Packing Methods"*.
3. These transparent plastic packages are extremely sensitive to reflow soldering conditions and must on no account be processed through more than one soldering cycle or subjected to infrared reflow soldering with peak temperature exceeding 217 °C ± 10 °C measured in the atmosphere of the reflow oven. The package body peak temperature must be kept as low as possible.
4. These packages are not suitable for wave soldering. On versions with the heatsink on the bottom side, the solder cannot penetrate between the printed-circuit board and the heatsink. On versions with the heatsink on the top side, the solder might be deposited on the heatsink surface.
5. If wave soldering is considered, then the package must be placed at a 45° angle to the solder wave direction. The package footprint must incorporate solder thieves downstream and at the side corners.
6. Wave soldering is suitable for LQFP, TQFP and QFP packages with a pitch (e) larger than 0.8 mm; it is definitely not suitable for packages with a pitch (e) equal to or smaller than 0.65 mm.
7. Wave soldering is suitable for SSOP, TSSOP, VSO and VSSOP packages with a pitch (e) equal to or larger than 0.65 mm; it is definitely not suitable for packages with a pitch (e) equal to or smaller than 0.5 mm.
8. Hot bar or manual soldering is suitable for PMFP packages.

15 DATA SHEET STATUS

LEVEL	DATA SHEET STATUS(1)	PRODUCT STATUS(2)(3)	DEFINITION
I	Objective data	Development	This data sheet contains data from the objective specification for product development. Philips Semiconductors reserves the right to change the specification in any manner without notice.
II	Preliminary data	Qualification	This data sheet contains data from the preliminary specification. Supplementary data will be published at a later date. Philips Semiconductors reserves the right to change the specification without notice, in order to improve the design and supply the best possible product.
III	Product data	Production	This data sheet contains data from the product specification. Philips Semiconductors reserves the right to make changes at any time in order to improve the design, manufacturing and supply. Relevant changes will be communicated via a Customer Product/Process Change Notification (CPCN).

Notes

1. Please consult the most recently issued data sheet before initiating or completing a design.
2. The product status of the device(s) described in this data sheet may have changed since this data sheet was published. The latest information is available on the Internet at URL http://www.semiconductors.philips.com.
3. For data sheets describing multiple type numbers, the highest-level product status determines the data sheet status.

16 DEFINITIONS

Short-form specification — The data in a short-form specification is extracted from a full data sheet with the same type number and title. For detailed information see the relevant data sheet or data handbook.

Limiting values definition — Limiting values given are in accordance with the Absolute Maximum Rating System (IEC 60134). Stress above one or more of the limiting values may cause permanent damage to the device. These are stress ratings only and operation of the device at these or at any other conditions above those given in the Characteristics sections of the specification is not implied. Exposure to limiting values for extended periods may affect device reliability.

Application information — Applications that are described herein for any of these products are for illustrative purposes only. Philips Semiconductors make no representation or warranty that such applications will be suitable for the specified use without further testing or modification.

17 DISCLAIMERS

Life support applications — These products are not designed for use in life support appliances, devices, or systems where malfunction of these products can reasonably be expected to result in personal injury. Philips Semiconductors customers using or selling these products for use in such applications do so at their own risk and agree to fully indemnify Philips Semiconductors for any damages resulting from such application.

Right to make changes — Philips Semiconductors reserves the right to make changes in the products - including circuits, standard cells, and/or software - described or contained herein in order to improve design and/or performance. When the product is in full production (status ‘Production’), relevant changes will be communicated via a Customer Product/Process Change Notification (CPCN). Philips Semiconductors assumes no responsibility or liability for the use of any of these products, conveys no licence or title under any patent, copyright, or mask work right to these products, and makes no representations or warranties that these products are free from patent, copyright, or mask work right infringement, unless otherwise specified.

18 PURCHASE OF PHILIPS I²C COMPONENTS

Purchase of Philips I²C components conveys a license under the Philips' I²C patent to use the components in the I²C system provided the system conforms to the I²C specification defined by Philips. This specification can be ordered using the code 9398 393 40011.

Philips Semiconductors – a worldwide company

Contact information

For additional information please visit **http://www.semiconductors.philips.com**. Fax: **+31 40 27 24825**
For sales offices addresses send e-mail to: **sales.addresses@www.semiconductors.philips.com**.

© Koninklijke Philips Electronics N.V. 2003 SCA75

All rights are reserved. Reproduction in whole or in part is prohibited without the prior written consent of the copyright owner.

The information presented in this document does not form part of any quotation or contract, is believed to be accurate and reliable and may be changed without notice. No liability will be accepted by the publisher for any consequence of its use. Publication thereof does not convey nor imply any license under patent- or other industrial or intellectual property rights.

Printed in The Netherlands 753503/01/pp59 Date of release: 2003 Oct 21 Document order number: 9397 750 10355

Let's make things better.

Philips Semiconductors

PHILIPS