查询QS34x245Q3X供应商 捷多邦，专业PCB打样工厂，24小时加急出货

QUALITY SEMICONDUCTOR, INC.

QuickSwitch® Products High-Speed CMOS QuickSwitch 32-Bit MultiWidth™ Bus Switches

QS34X245
QS34X2245

FEATURES/BENEFITS

- Enhanced N channel FET with no inherent diode to V_{CC}
- Bidirectional switches connect inputs to outputs
- Zero propagation delay, zero ground bounce
- QS34X245 is 32-bit version of QS3245
- QS34X2245 has 25Ω resistors for low noise
- Flow-through pinout for easy layout
- Undershoot clamp diodes on all switch and control inputs
- TTL-compatible control inputs
- Available in 80-pin MillipaQ™ package (Q3)

APPLICATIONS

- Hot-docking, hot-swapping application (Application Note AN-13)
- Voltage translation (5V to 3.3V; Application Note AN-11)
- Bus switching and isolation
- Power conservation
- Logic replacement (data processing)
- Capacitance isolation
- Clock gating

DESCRIPTION

The QS34X245 is a member of the MultiWidth™ family of QuickSwitch devices and provides a set of 32 high-speed CMOS compatible bus switches in a flow-thru pinout. This device is available in the MillipaQ package, the worlds first small outline 32-bit solution. The low on-resistance of the QS34X245 allows inputs to be connected outputs without adding propagation delay and without generating additional ground bounce noise. The QS34X2245 includes internal 25Ω resistors to reduce reflection noise in high speed applications. When Output Enable ($\overline{OEn}$) is low, the switches are turned on, connecting bus A to bus B. When $\overline{OEn}$ is high, the switches are turned off. This device is ideally suited for 32/64 bit applications where board space is at a premium.

QuickSwitch devices provide an order of magnitude faster speed than conventional logic devices.

4

Figure 1. Functional Block Diagram

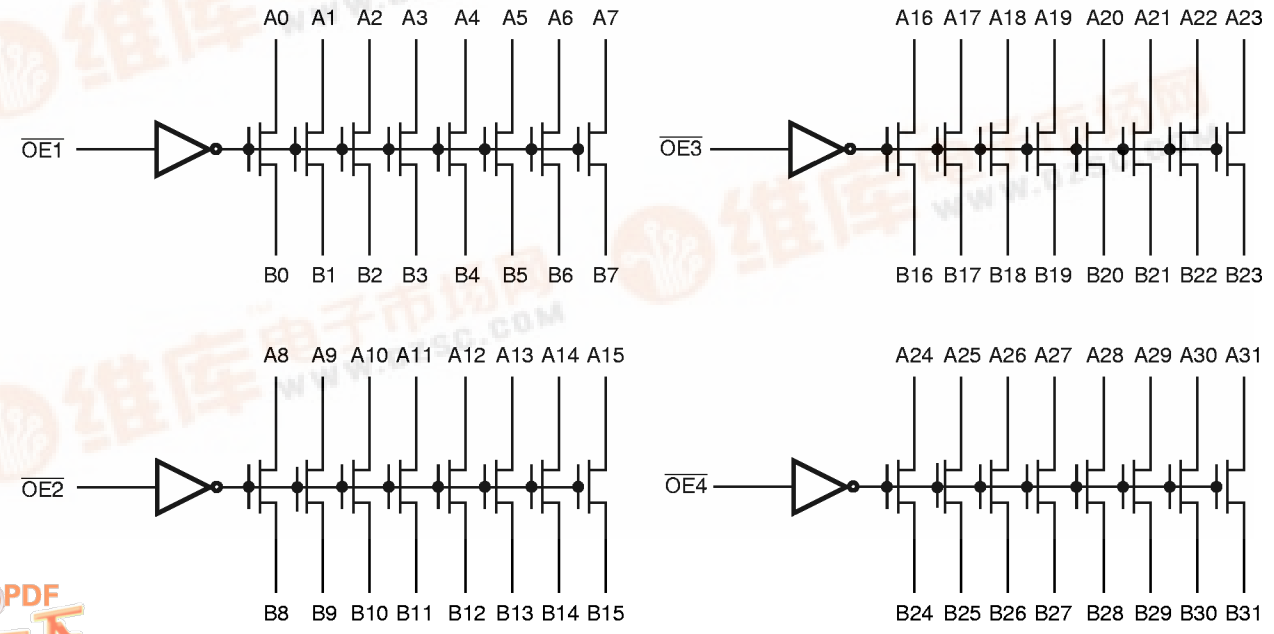

找PDF 维库一下 pdf.dzsc.com

Figure 2. Pin Configuration

(All pins top view)

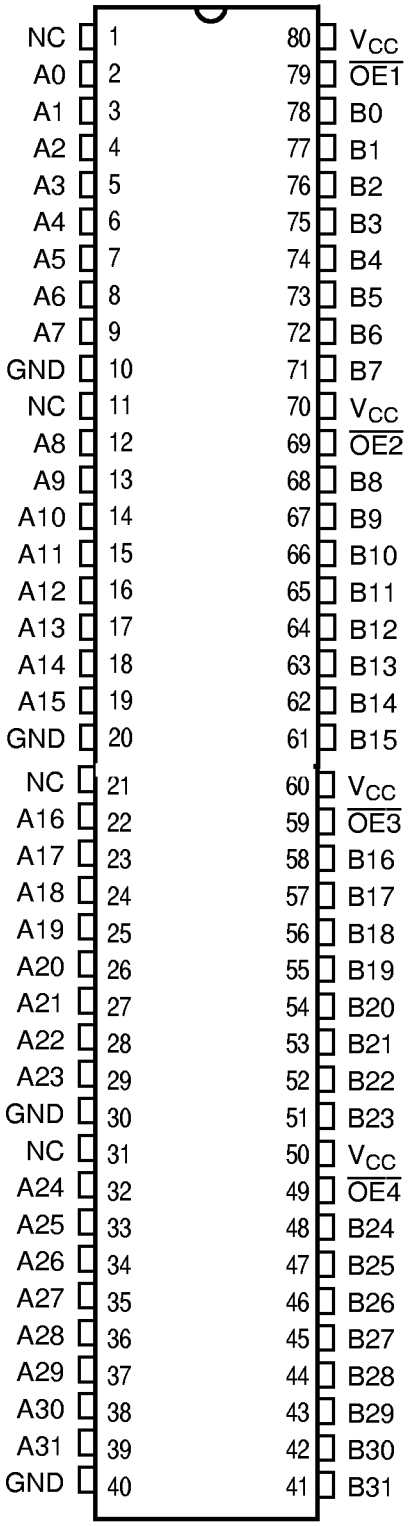

Table 1. Pin Description

Name	Description
$\overline{OEn}$	Output Enable
An	Data I/Os
Bn	Data I/Os

Table 2. Function Table

$\overline{OEn}$	Function
H	Disconnected
L	An = Bn

Table 3. Absolute Maximum Ratings

Supply Voltage to Ground.....–0.5V to +7.0V
DC Switch Voltage V_S .....–0.5V to +7.0V
DC Input Voltage V_{IN} .....–0.5V to +7.0V
AC Input Voltage (for a pulse width ≤ 20ns).....–3.0V
DC Output Current Max. Sink Current/Pin.....120mA
Maximum Power Dissipation At T_A =70°C.....1.4 watts
T_{STG} Storage Temperature.....–65°C to +150°C

Note: ABSOLUTE MAXIMUM CONTINUOUS RATINGS are those values beyond which damage to the device may occur. Exposure to these conditions or conditions beyond those indicated may adversely affect device reliability. Functional operation under absolute-maximum conditions is not implied.

Table 4. Capacitance

T_A = 25°C, f = 1MHz, V_{IN} = 0V, V_{OUT} = 0V

Pins	MillipaQ Typ	MillipaQ Max	Unit
Control Inputs	3	4	pF
QuickSwitch Channels (Switch OFF)	7	8	pF

Note: Capacitance is characterized but not production tested.

Table 5. DC Electrical Characteristics Over Operating Range

T_A = –40°C to 85°C, V_{CC} = 5.0V ± 5%

Symbol	Parameter	Test Conditions	Min	Typ(1)	Max	Unit
V_{IH}	Input HIGH Voltage	Guaranteed Logic HIGH for Control Inputs	2.0	—	—	V
V_{IL}	Input LOW Voltage	Guaranteed Logic LOW for Control Inputs	—	—	0.8	V
$\lvert I_{IN} \rvert$	Input Leakage Current (Control Inputs)	$0V \le V_{IN} \le V_{CC}$	—	—	1	µA
$\lvert I_{OZ} \rvert$	Off-State Current (Hi-Z)	$0V \le V_{OUT} \le V_{CC}$, Switches OFF	—	—	1	µA
R_{ON}	Switch ON Resistance(2)	V_{CC} = Min., V_{IN} = 0.0V QS34X245 I_{ON} = 30mA QS34X2245	— 20	5 28	7 40	Ω
R_{ON}	Switch ON Resistance(2)	V_{CC} = Min., V_{IN} = 2.4V QS34X245 I_{ON} = 15mA QS34X2245	— 20	10 35	15 48	Ω
V_P	Pass Voltage(3)	$V_{IN} = V_{CC}$ = 5V, I_{OUT} = –5µA	3.7	4	4.2	V

Notes:
1. Typical values indicate V_{CC} = 5.0V and T_A = 25°C.
2. For a diagram explaining the procedure for R_{ON} measurement, please see Section 1 under "DC Electrical Characteristics." Max. value of R_{ON} guaranteed but not production tested.
3. Pass Voltage is guaranteed, but not production tested.

4

Figure 3. Typical ON Resistance vs V_{IN} at V_{CC} = 5.0V (QS34X245)

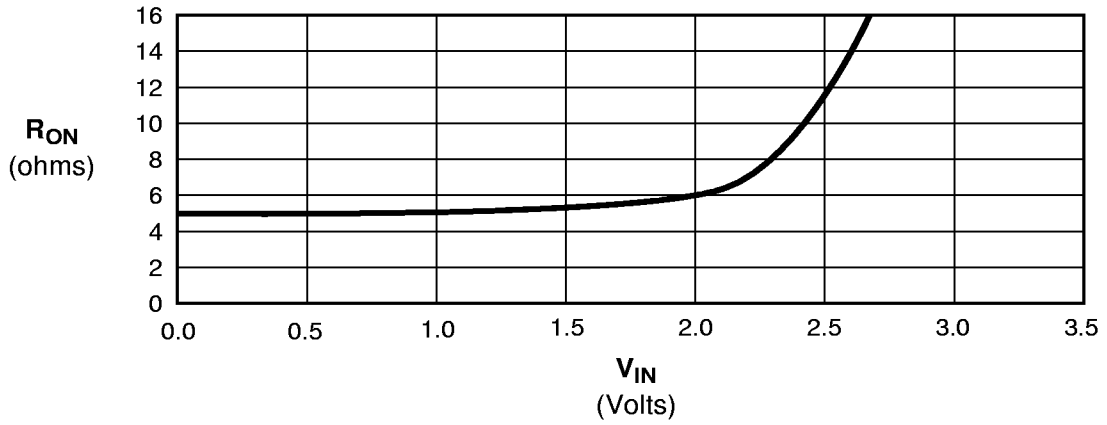

Note: For QS34X2245, add 23Ω to R_{ON} shown.

Table 6. Power Supply Characteristics Over Operating Range

T_A = –40°C to 85°C, V_{CC} = 5.0V ± 5%

Symbol	Parameter	Test Conditions[1]	Max	Unit
I_{CCQ}	Quiescent Power Supply Current	V_{CC} = Max., V_{IN} = GND or V_{CC}, f = 0	12	µA
ΔI_{CC}	Power Supply Current[2] Per Control Input HIGH	V_{CC} = Max., V_{IN} = 3.4V, f = 0	1.5	mA
Q_{CCD}	Dynamic Power Supply Current per MHz[3]	V_{CC} = Max., A and B Pins Open, Control Input Toggling @ 50% Duty Cycle	0.25	mA/ MHz

Notes:
1. For conditions shown as Min. or Max., use the appropriate values specified under DC specifications.
2. Per TTL driven input (V_{IN} = 3.4V, control inputs only). A and B pins do not contribute to ΔI_{CC}.
3. This current applies to the control inputs only and represents the current required to switch internal capacitance at the specified frequency. The A and B inputs generate no significant AC or DC currents as they transition. This parameter is guaranteed, but not production tested.

Table 7. Switching Characteristics Over Operating Range

T_A = –40°C to 85°C, V_{CC} = 5.0V ± 5%
C_{LOAD} = 50pF, R_{LOAD} = 500Ω unless otherwise noted.

Symbol	Description[1]		Min	Typ	Max	Unit
t_{PLH}	Data Propagation Delay[2,3]	QS34X245	—	—	0.25[3]	ns
t_{PHL}	An to Bn, Bn to An	QS34X2245	—	—	1.25[3]	
t_{PZH}	Switch Turn-on Delay	QS34X245	0.5	—	5.6	ns
t_{PZL}	$\overline{OE}$ to An,Bn	QS34X2245	0.5	—	6.6	
t_{PHZ}	Switch Turn-off Delay[2]	QS34X245	0.5	—	5.2	ns
t_{PLZ}	$\overline{OE}$ to An,Bn	QS34X2245	0.5	—	5.2	

Notes:
1. See Test Circuit and Waveforms. Minimums guaranteed but not production tested.
2. This parameter is guaranteed, but not production tested.
3. The bus switch contributes no propagation delay other than the RC delay of the ON resistance of the switch and the load capacitance. The time constant for the switch alone is of the order of 0.25ns for QS34X245 and 1.25ns for QS34X2245 for C_L = 50pF. Since this time constant is much smaller than the rise/fall times of typical driving signals, it adds very little propagation delay to the system. Propagation delay of the bus switch when used in a system is determined by the driving circuit on the driving side of the switch and its interaction with the load on the driven side.

150-MIL MilliPaQ - Package Code Q3
Plastic Small Outline Gull-Wing

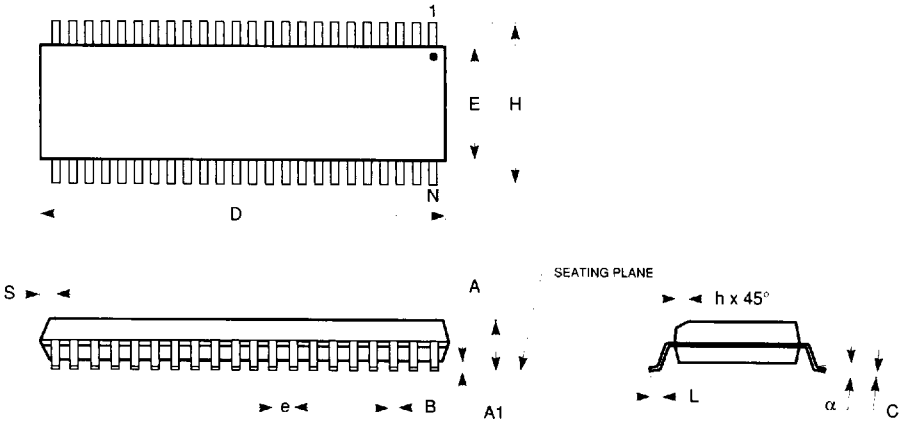

JEDEC#	MO-154BC		
DWG#	PSS-80A		
Symbol	Min	Nom	Max
A	0.059	0.065	0.069
A1	0.004	0.006	0.008
B	0.0067	0.008	0.009
C	0.0075	0.008	0.0098
D	0.803	0.807	0.811
E	0.150	0.154	0.157
e	0.0197 BSC, 0.5mm		
H	0.228	0.236	0.244
h	0.010	0.013	0.016
L	0.020	0.024	0.030
N	80		
α	0°	5°	8°
S	0.016	0.020	0.024

Notes:
1. Refer to applicable symbol list.
2. All dimensions are in inches.
3. N is the maximum number of lead positions.
4. Dimensions D and E are to be measured at maximum material condition but do not include mold flash. Allowable mold flash is 0.006in. per side.
5. Lead coplanarity is 0.003in. maximum.