查询MM1134供应商
捷多邦，专业PCB打样工厂，24小时加急出货

System Reset (with battery back-up)
Monolithic IC MM1134

Outline

These ICs protect S-RAM data in back-up mode (CS signal makes R-SAM CE pin low and $\overline{CE}$ pin high) when power supply voltage goes below a certain set voltage (detection voltage 3.5V, 4.2V typ.). Further, it switches from main power supply to battery back-up when power supply voltage drops. Conversely, when power supply rises, it first switches the S-RAM from battery back-up to main power supply (switching voltage 3.3V typ.), then from back-up mode to normal mode (CS signal makes S-RAM CE pin high and CE pin low). These signal processes provide reliable protection against data damage.

Features

1 Power supply switching circuit (switching between main power supply and battery)
2 CS control for S-RAM (normal mode : S-RAM can be accessed, back-up mode: S-RAM can not be accessed low current consumption mode)
3 With CS signal gate circuit

Characteristics

1. Battery back-up		
1. Low IC current consumption (loss current)		0.3μA typ.
2. Drop voltage inside IC (input/output voltage difference)	I_O=100μA	0.3V typ.
3. Reverse current (reverse leak current)		0.1μA max.
2. Normal operation		
1. Drop voltage inside IC (input/output voltage difference)	I_O=50μA	0.2V typ.
2. Output voltage V_{CC}=5V	I_O=50mA	4.8V typ.
3. Battery-V_{CC} switching voltage		3.3V typ.
4. Detection voltage (CS, $\overline{CS}$, reset output)	A : 3.5V typ. B : 4.2V typ.	

找PDF 维库一下 pdf.dzsc.com

Package

SOP-8C (MM1134 □F)
*□contains detection voltage rank.

Applications

1. Memory cards (S-RAM cards)
2. PCs, word processors
3. Fax machines, photocopiers, other office equipment
4. Sequence controllers, other FA equipment
5. Video games and other equipment with S-RAMs

Pin Assignment

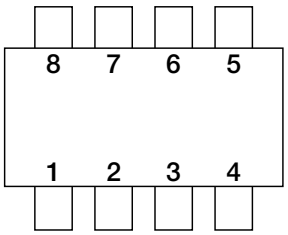

SOP-8C
(TOP VIEW)

Pin no.	Pin name
1	GND
2	$\overline{\text{RESET}}$
3	CS
4	V_{BATT}
5	$\overline{\text{CS}}$
6	V_{OUT}
7	$\overline{\text{Y}}$
8	V_{CC}

Block Diagram

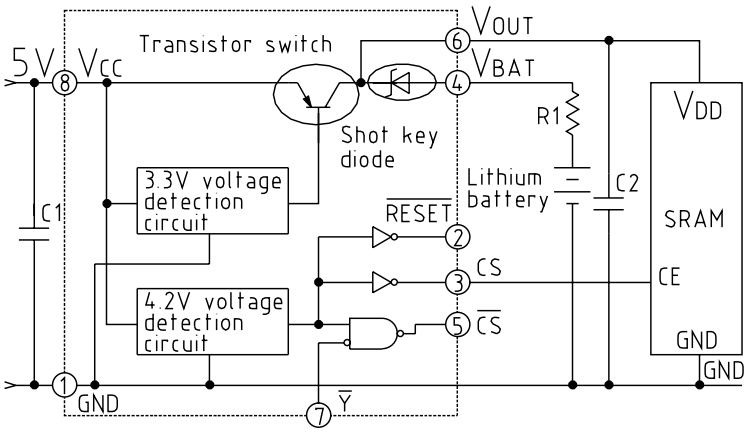

Back-up IC inside dotted lines
C1,C2: Power supply bypass capacitor
R1 : Lithium battery protection resistor

Equivalent Circuit Diagram

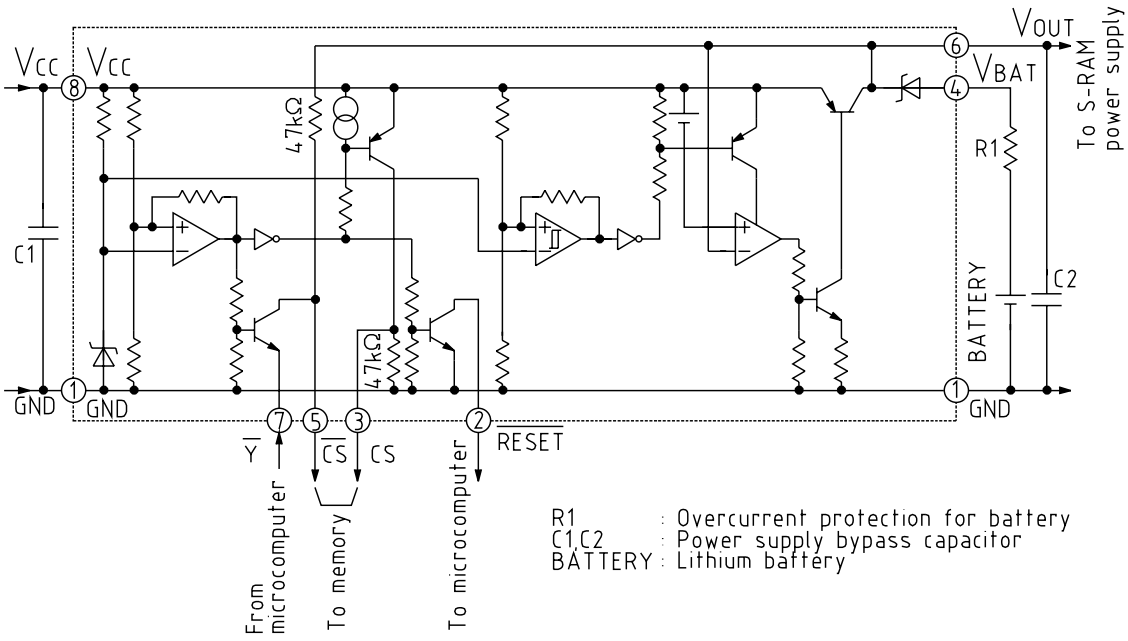

Absolute Maximum Ratings (Ta=25℃)

Item	Symbol	Rating	Units
Storage temperature	T_{STG}	–40~+125	℃
Operating temperature	T_{OPR}	–20~+75	℃
Power supply voltage	V_{CC} max.	–0.3~7	V
Operating voltage	V_{CCOP}	–0.3~7	V
Allowable loss	Pd	300	mW
Output current	I_{o1}	80	mA
Output current	I_{o2}	200	μA

Note : I_{o1} expresses V_{CC} output current value, and I_{o2} expresses V_{BATT} output current value.

Electrical Characteristics

Typical model: MM1134B(Except where noted otherwise, Ta=25°C, V_{CC}=V_{RS}=5V, R_{RS}=10kΩ)

Item	Symbol	Measuring circuit	Measurement conditions	Min.	Typ.	Max.	Units
Consumption current	I_{CC}	1	V_{CC}=5V, V_{BATT}=3V, I_{O1}=0mA		1.4	2.2	mA
I/O voltage difference 1	V_{SAT1}	1	V_{CC}=5V, V_{BATT}=3V, I_{O1}=1mA		0.03	0.05	V
Output voltage 1	V_{O1}	1	V_{CC}=5V, V_{BATT}=3V, I_{O1}=1mA	4.95	4.97		V
Output voltage 2	V_{O2}	1	V_{CC}=5V, V_{BATT}=3V, I_{O1}=15mA	4.75	4.90		V
Output voltage 3	V_{O3}	1	V_{CC}=5V, V_{BATT}=3V, I_{O1}=50mA	4.70	4.80		V
Detection voltage	V_S	1	V_{CC}=H→L	4.00	4.20	4.40	V
Hysteresis voltage	ΔV_S	1	V_{CC}=L→H	50	100	200	mV
Reset output voltage L	V_{RSL}	1	V_{CC}=3.7V		0.2	0.4	V
Reset leakage current H	I_{RSH}	1	V_{CC}=5V, V_{RS}=7.0V		±0.01	±0.1	μA
Reset operation limit voltage	V_{OPL}	1	V_{RSL}≤0.4V, V_{CC}=H→L		0.8	1.2	V
CS output voltage L	V_{CSL}	1	V_{CC}=3.7V, V_{BATT}=3V, I_{CS}=1μA			0.1	V
CS output voltage H	V_{CSH}	1	V_{CC}=5V, V_{BATT}=3V, I_{CS}=−1μA	4.90			V
$\overline{CS}$ output voltage L	$V_{\overline{CS}L}$	1	V_{CC}=5V, V_{BATT}=3V, $I_{\overline{CS}}$=1μA, $V_{\overline{Y}}$=0V			0.2	V
$\overline{CS}$ output voltage H	$V_{\overline{CS}H}$	1	V_{CC}=3.7V, V_{BATT}=3V, $I_{\overline{CS}}$=−1μA, $V_{\overline{Y}}$=0V V_{CC}=5V, V_{BATT}=3V, $I_{\overline{CS}}$=−1μA, $V_{\overline{Y}}$=5V	V_O−0.1			V
Detection voltage temperature characteristic	$V_S/\Delta T$	1				±0.05	%/℃
Power supply switching voltage	V_B	1	V_{CC}=H L	3.15	3.30	3.45	V
Hysteresis voltage	ΔV_B	1	V_{CC}=L→H	50	100	200	mV
Switching voltage temperature characteristic	$V_B/\Delta T$	1	→			±0.05	%/℃
Loss current	I_{BL}	1	V_{CC}=0V, V_{BATT}=3V, I_{O2}=0μA		0.3	0.5	μA
I/O voltage difference 2	Vsat2	1	V_{CC}=0V, V_{BATT}=3V, I_{O2}=1μA		0.2	0.3	V
Output voltage 4	V_{O4}	1	V_{CC}=0V, V_{BATT}=3V, I_{O2}=1μA	2.7	2.8		V
Output voltage 5	V_{O5}	1	V_{CC}=0V, V_{BATT}=3V, I_{O2}=100μA	2.6	2.7		V
Reverse current	I_{OREV}	1	V_{CC}=5V, V_{BATT}=0V			0.1	μA
$\overline{Y}$ pin Lo level current	$I_{\overline{Y}LO}$	1	V_{CC}=5V, V_{BATT}=3V, $V_{\overline{Y}}$=0V		150	400	μA
$\overline{Y}$ pin Pin transmission delay time	t_{PLH}	2	V_Y=L→H, C_L=15pF *		8	20	ns
	t_{PHL}	2	V_Y=H→L, C_L=15pF *		8	20	ns
Reference voltage (typical)	V_{REF}				1.25		V

Note : When input pulse rise and fall time is less than 6Nsec.

Measuring circuit 1

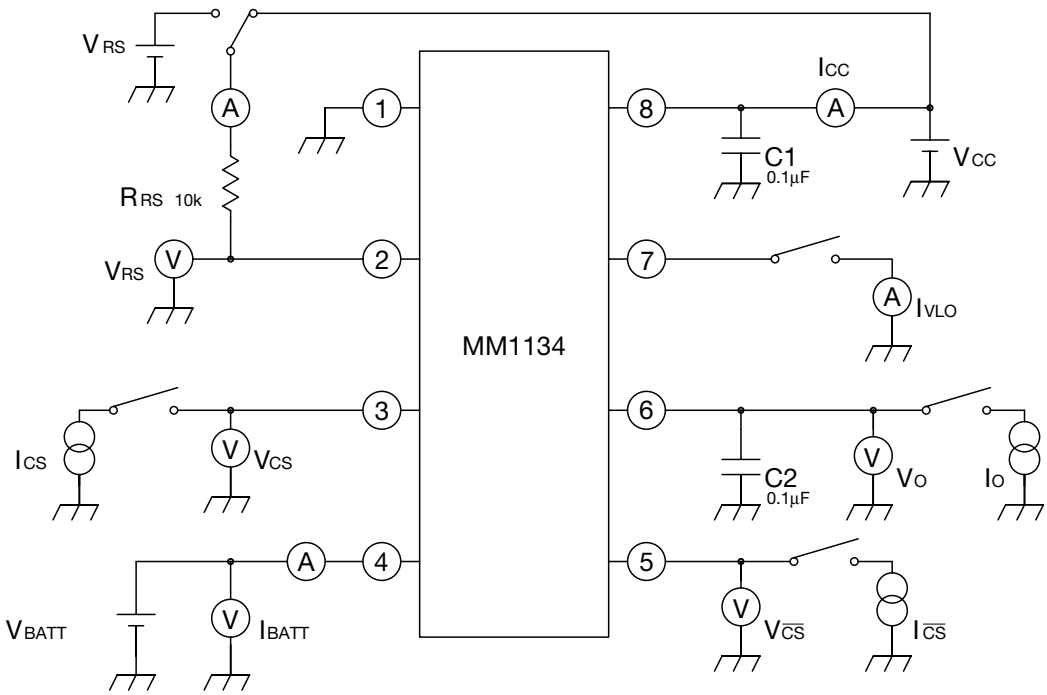

Measuring circuit 2

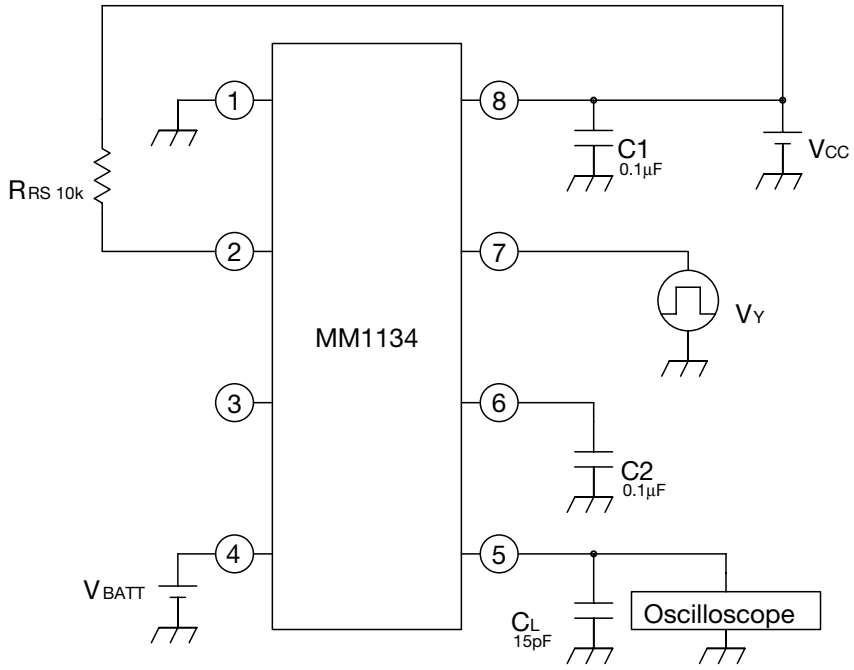

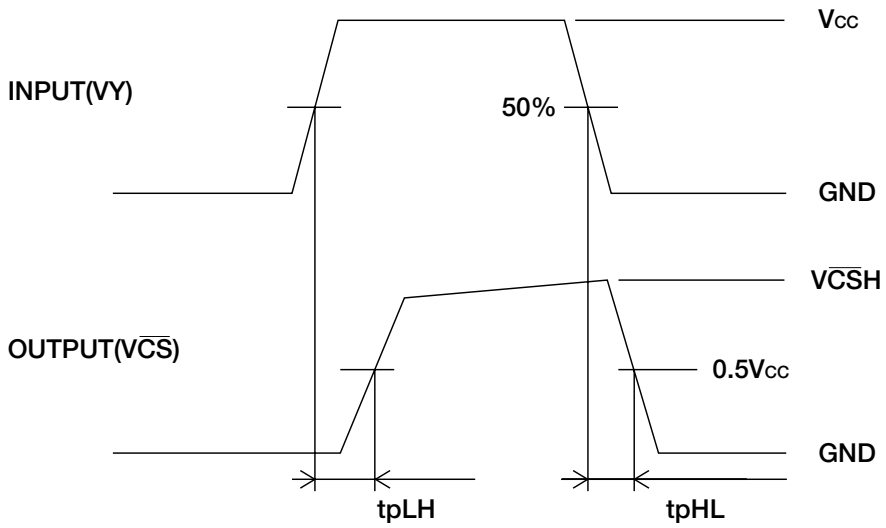

Timing Chart

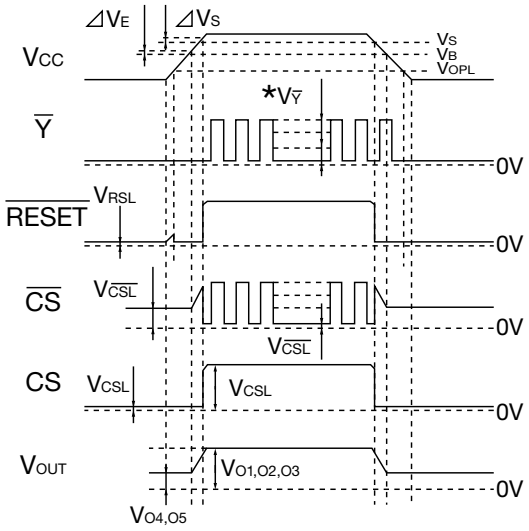

* Use $\overline{Y}$ pin input voltage at less than 5V when $V_{CC} \leqq V_S$.

Characteristics

VOUT-IOUT (VCC=5.0V)

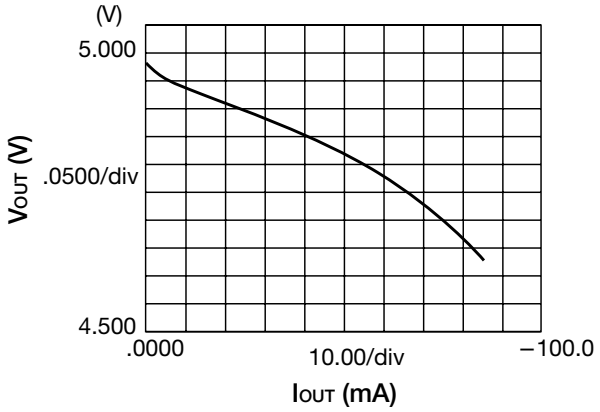

VOUT-IOUT (VBAT=3.0V)

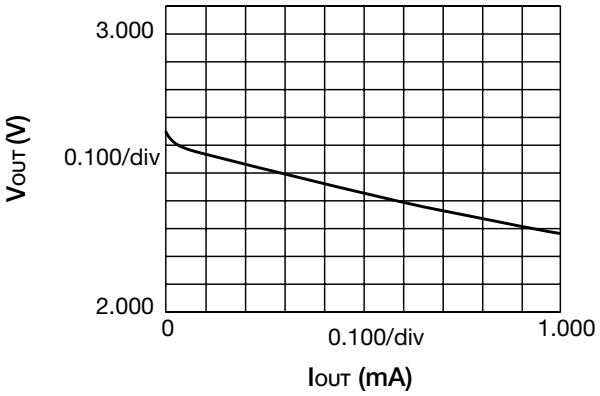

VCC-IBAT

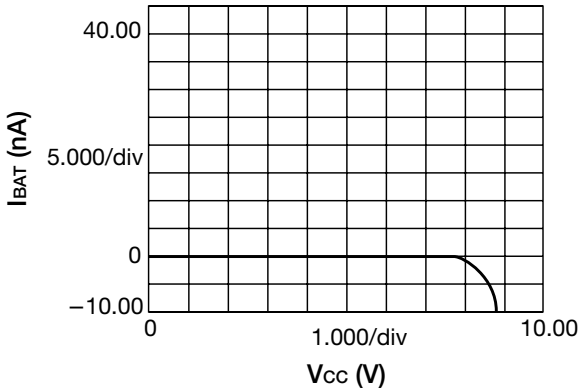

VCC-ICC

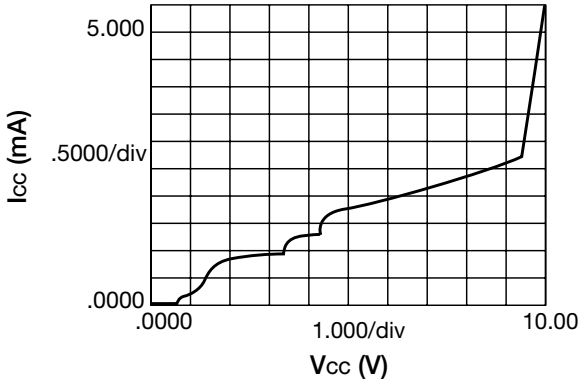

Current consumption-Temperature characteristics

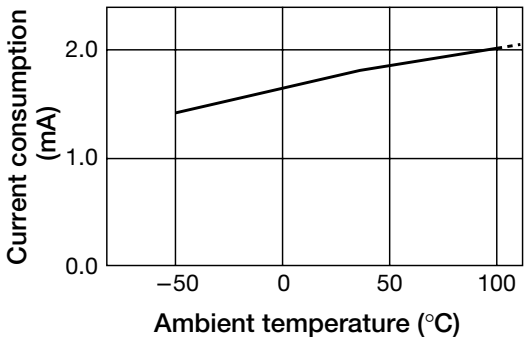

Output voltage 1, 2-Temperature characteristics

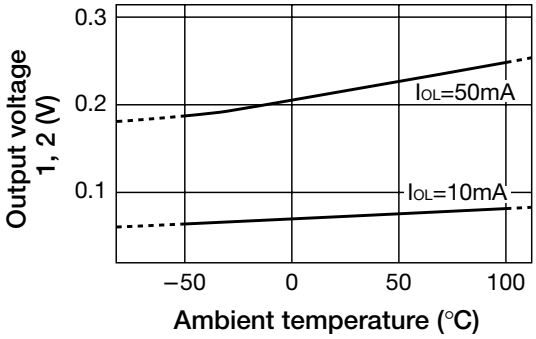

Output voltage 3, 4-Temperature

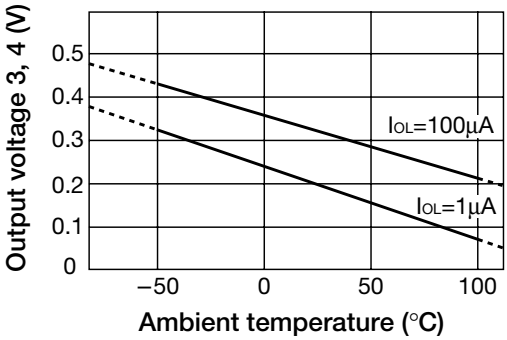

Reverse current-Temperature

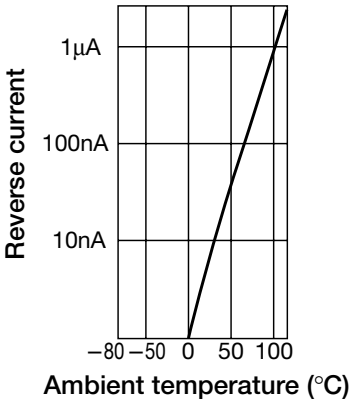
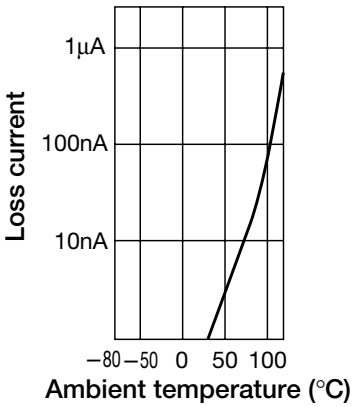
Loss current-Temperature