查询MC33172供应商 捷多邦，专业PCB打样工厂，24小时加急出货

SGS-THOMSON MICROELECTRONICS

MC33172 - MC35172

LOW POWER DUAL BIPOLAR OPERATIONAL AMPLIFIERS

- GOOD CONSUMPTION/SPEED RATIO : ONLY 200µA/Amp FOR 2.1MHz, 2V/µs
- SINGLE (OR DUAL) SUPPLY OPERATION FROM +4V TO +44V (±2V TO ±22V)
- WIDE INPUT COMMON MODE VOLTAGE RANGE INCLUDING V_{CC}^-
- LOW LEVEL OUTPUT VOLTAGE CLOSE TO V_{CC}^- : 100mV TYPICAL
- PIN TO PIN COMPATIBLE WITH STANDARD DUAL OP AMPs

N
DIP8
(Plastic Package)

D
SO8
(Plastic Micropackage)

DESCRIPTION

The MC33172 series are dual bipolar operational amplifiers offering both low consumption (200µA/Amp) and good speed (2.1MHz, 2V/µs). Moreover the Input Common Mode Range extends down to the lower supply rail, allowing single supply operation from +4V to +44V.

ORDER CODES

Part Number	Temperature Range	Package	
		N	D
MC33172	-40°C, +105°C	•	•
MC35172	-55°C, +125°C	•	•
Example: MC33172N			

PIN CONNECTIONS (top view)

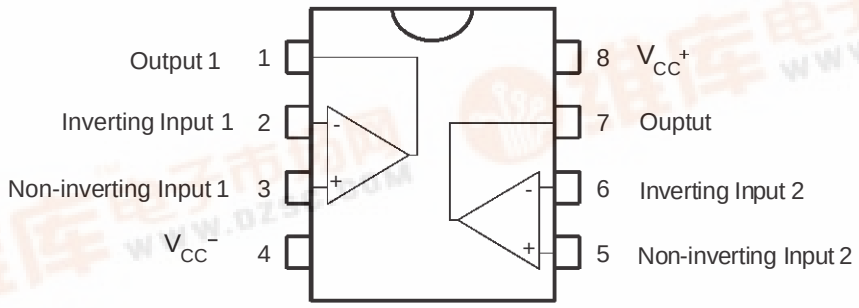

找PDF 维库一下 pdf.dzsc.com

SCHEMATIC DIAGRAM (for 1/2 MC33172)

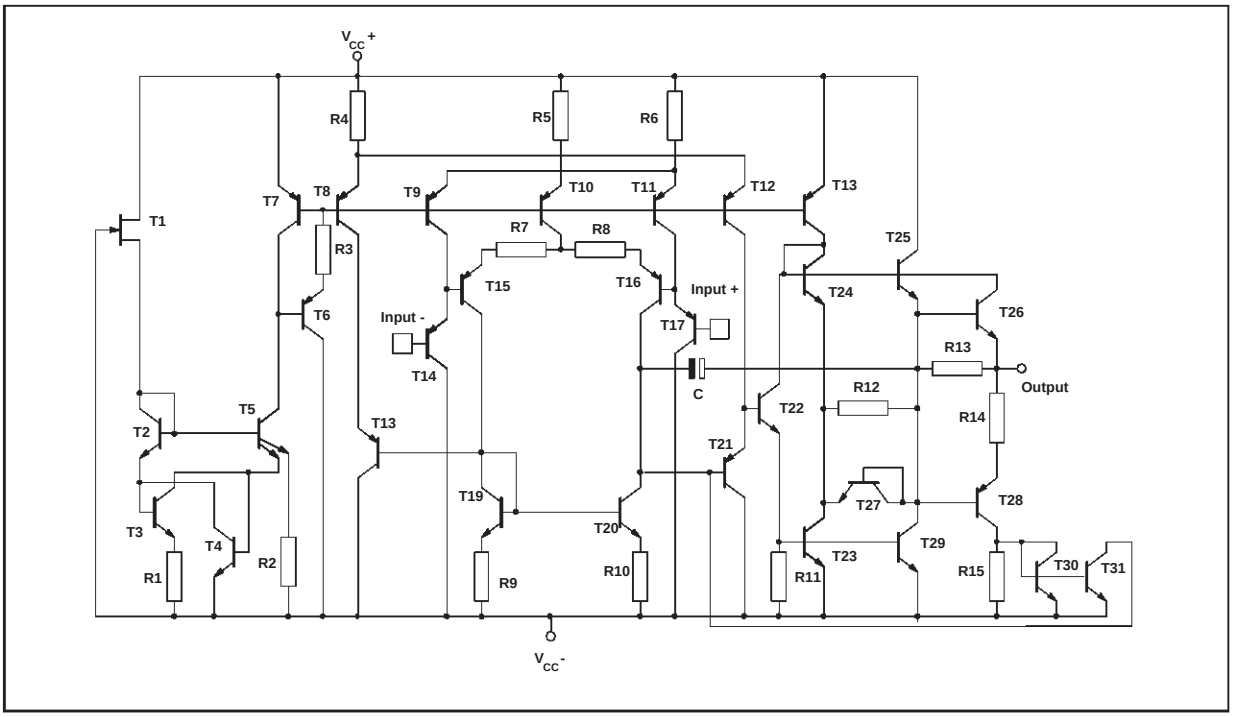

ABSOLUTE MAXIMUM RATINGS

Symbol	Parameter		Value	Unit
V_{CC}	Supply Voltage		±22	V
V_{id}	Differential Input Voltage		(Note 1)	V
V_i	Input Voltage		(Note 1)	V
	Output Short Circuit Duration		Indefinite	s
T_{oper}	Operating Temperature Range	MC33172 MC35172	-40 to 105 -55 to 125	^oC
T_j	Junction Temperature		150	^oC
T_{stg}	Storage Temperature		-65 to 150	^oC

Note 1: Either or both input voltages must not exceed the magnitude of V_{CC}.

OPERATING CONDITIONS

Symbol	Parameter	Value	Unit
V_{CC}	Supply Voltage Range	±2 to ±22	V

ELECTRICAL CHARACTERISTICS

V_{CC}^+ = +15V, V_{CC}^- = -15V, R_L connected to Ground, T_{amb} = 25°C (unless otherwise specified)

Symbol	Parameter	Min.	Typ.	Max.	Unit
V_{io}	Input Offset Voltage V_{CC}^+ = +15V, V_{CC}^- = -15V, V_{ic} = 0V V_{CC}^+ = 5V, V_{CC}^- = 0V, V_{ic} = 0V, V_o = 1.4V V_{CC}^+ = +15V, V_{CC}^- = -15V, V_{ic} = 0V, $T_{min.} \le T_{amb} \le T_{max.}$		 1 1	 4.5 5 6.5	mV
DV_{io}	Input Offset Voltage Drift		10		µV/°C
I_{io}	Input Offset Current (V_{ic} = 0V) $T_{min.} \le T_{amb} \le T_{max.}$		5	20 40	nA
I_{ib}	Input Bias Current (V_{ic} = 0V) $T_{min.} \le T_{amb} \le T_{max.}$		20	100 200	nA
A_{vd}	Large Signal Voltage Gain (R_L = 10kΩ, V_O = ±10V) $T_{min.} \le T_{amb} \le T_{max.}$	50 25	100		V/mV
V_{OH}	High Level Output Voltage V_{CC}^+ = 5V, V_{CC}^- = 0V, R_L = 10kΩ V_{CC}^+ = +15V, V_{CC}^- = -15V, R_L = 10kΩ V_{CC}^+ = +15V, V_{CC}^- = -15V, R_L = 10kΩ, $T_{min.} \le T_{amb} \le T_{max.}$	 3.5 13.6 13.3	 4.2 14.2		V
V_{OL}	Low Level Output Voltage V_{CC}^+ = 5V, V_{CC}^- = 0V, R_L = 10kΩ V_{CC}^+ = +15V, V_{CC}^- = -15V, R_L = 10kΩ V_{CC}^+ = +15V, V_{CC}^- = -15V, R_L = 10kΩ, $T_{min.} \le T_{amb} \le T_{max.}$		 0.1 -14	 0.15 -13.6 -13.3	V
I_{sc}	Output Short Circuit Current (V_{id} = ±1V, V_O = 0V) Source Sink	 3 15	 6 27		mA
V_{icm}	Input Common Mode Voltage Range $T_{min.} \le T_{amb} \le T_{max.}$	V_{CC}^- to (V_{CC}^+ - 1.8) V_{CC}^- to (V_{CC}^+ - 2.2)			V
CMR	Common Mode Rejection Ratio (V_i = $V_{icm\ min.}$)	80	100		dB
SVR	Supply Voltage Rejection Ratio (V_{CC} = ±5 to ±15V)	80	100		dB
I_{CC}	Supply Current (per amplifier) V_{CC}^+ = 5V, V_{CC}- = 0V, no load V_{CC}^+ = +15V, V_{CC}^- = -15V, no load V_{CC}^+ = +15V, V_{CC}^- = -15V, no load, $T_{min.} \le T_{amb} \le T_{max.}$		 200 220	 250 250 300	µA
SR	Slew Rate (V_i = ±10V, R_L = 10kΩ, C_L = 100pF)	1.6	2		V/µs
GBP	Gain Bandwidth Product (R_L = 10kΩ, C_L = 100pF, f = 100kHz)	1.4	2.1		MHz
∅m	Phase Margin (R_L = 10kΩ, C_L = 100pF)		45		Degrees
e_n	Equivalent Input Noise Voltage (f = 1kHz)		29		$\frac{nV}{\sqrt{Hz}}$
THD	Total Harmonic Distortion		0.05		%
V_{O1}/V_{O2}	Channel Separation		120		dB

PACKAGE MECHANICAL DATA

8 PINS - PLASTIC DIP

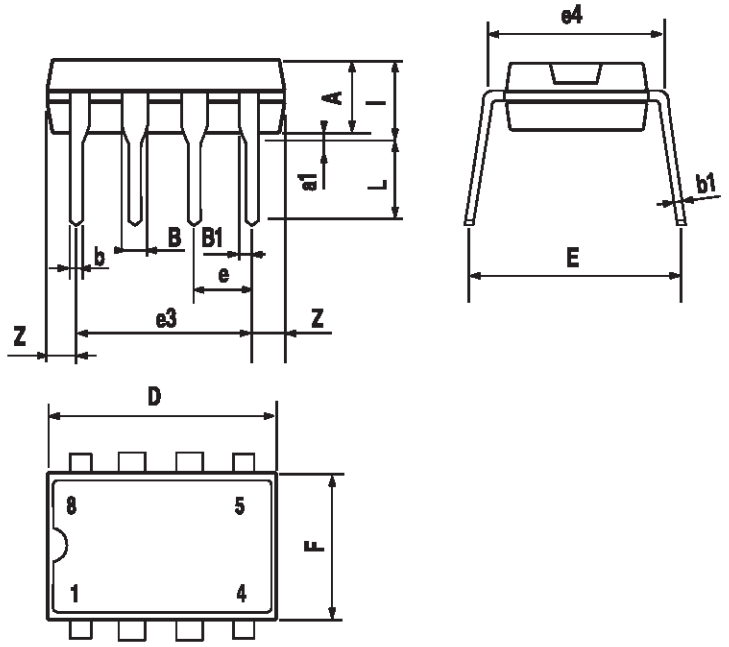

PM-DIP8.EPS

Dimensions	Millimeters			Inches		
	Min.	Typ.	Max.	Min.	Typ.	Max.
A		3.32			0.131	
a1	0.51			0.020		
B	1.15		1.65	0.045		0.065
b	0.356		0.55	0.014		0.022
b1	0.204		0.304	0.008		0.012
D			10.92			0.430
E	7.95		9.75	0.313		0.384
e		2.54			0.100	
e3		7.62			0.300	
e4		7.62			0.300	
F			6.6			0260
i			5.08			0.200
L	3.18		3.81	0.125		0.150
Z			1.52			0.060

DIP8.TBL

PACKAGE MECHANICAL DATA

8 PINS - PLASTIC MICROPACKAGE (SO)

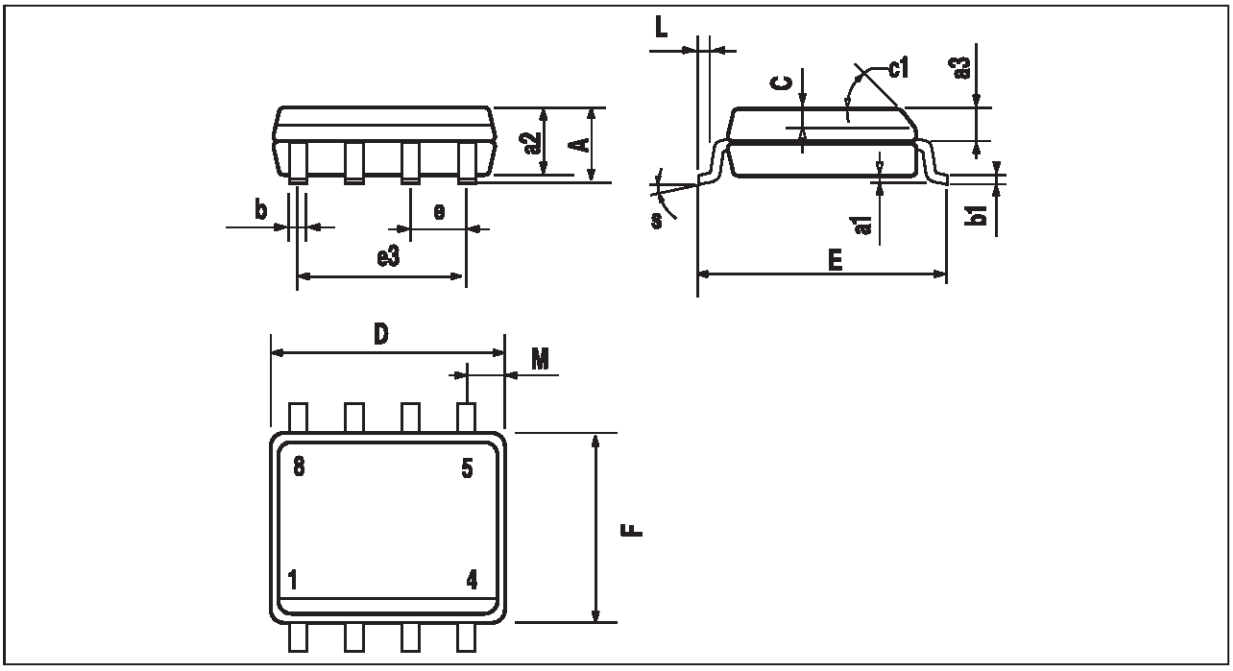

PM-SO8.EPS

Dimensions	Millimeters			Inches		
	Min.	Typ.	Max.	Min.	Typ.	Max.
A			1.75			0.069
a1	0.1		0.25	0.004		0.010
a2			1.65			0.065
a3	0.65		0.85	0.026		0.033
b	0.35		0.48	0.014		0.019
b1	0.19		0.25	0.007		0.010
C	0.25		0.5	0.010		0.020
c1	45° (typ.)					
D	4.8		5.0	0.189		0.197
E	5.8		6.2	0.228		0.244
e		1.27			0.050	
e3		3.81			0.150	
F	3.8		4.0	0.150		0.157
L	0.4		1.27	0.016		0.050
M			0.6			0.024
S	8° (max.)					

SO8.TBL

Information furnished is believed to be accurate and reliable. However, SGS-THOMSON Microelectronics assumes no responsibility for the consequences of use of such information nor for any infringement of patents or other rights of third parties which may result from its use. No license is granted by implication or otherwise under any patent or patent rights of SGS-THOMSON Microelectronics. Specifications mentioned in this publication are subject to change without notice. This publication supersedes and replaces all information previously supplied. SGS-THOMSON Microelectronics products are not authorized for use as critical components in life support devices or systems without express written approval of SGS-THOMSON Microelectronics.

© 1997 SGS-THOMSON Microelectronics – Printed in Italy – All Rights Reserved

SGS-THOMSON Microelectronics GROUP OF COMPANIES
Australia - Brazil - Canada - China - France - Germany - Italy - Japan - Korea - Malaysia - Malta - Morocco
The Netherlands - Singapore - Spain - Sweden - Switzerland - Taiwan - Thailand - United Kingdom - U.S.A.

ORDER CODE :