STPS745D/F/G

POWER SCHOTTKY RECTIFIER

MAIN PRODUCT CHARACTERISTICS

$I_{F(AV)}$	7.5 A
V_{RRM}	45 V
Tj (max)	175 °C
V_F (max)	0.57 V

FEATURES AND BENEFITS

- VERY SMALL CONDUCTION LOSSES
- NEGLIGIBLE SWITCHING LOSSES
- EXTREMELY FAST SWITCHING
- INSULATED PACKAGE: ISOWATT220AC
  Insulating voltage = 2000V DC
  Capacitance = 12pF

DESCRIPTION

Single Schottky rectifier suited for Switch Mode Power Supply and high frequency DC to DC converters.

Packaged either in TO-220AC, ISOWATT220AC or D^2PAK, this device is intended for use in low voltage, high frequency inverters, free wheeling and polarity protection applications.

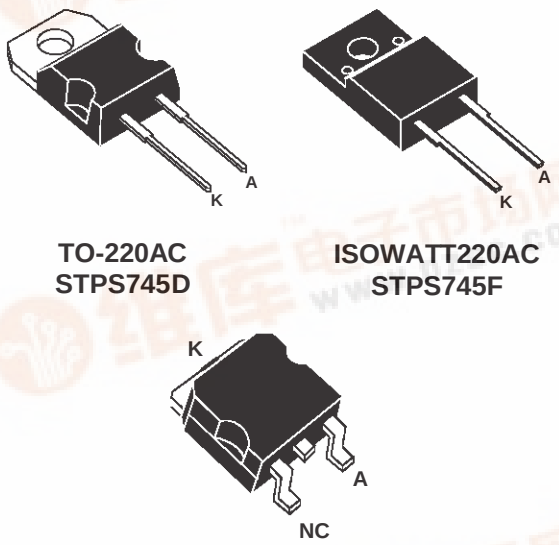

TO-220AC
STPS745D

ISOWATT220AC
STPS745F

D^2PAK
STPS745G

ABSOLUTE RATINGS (limiting values)

Symbol	Parameter			Value	Unit
V_{RRM}	Repetitive peak reverse voltage			45	V
$I_{F(RMS)}$	RMS forward current			20	A
$I_{F(AV)}$	Average forward current δ = 0.5	TO-220AC / D^2PAK	Tc = 160°C	7.5	A
		ISOWATT220AC	Tc = 145°C		
I_{FSM}	Surge non repetitive forward current	tp = 10 ms sinusoidal		150	A
I_{RRM}	Repetitive peak reverse current	tp = 2 µs square F = 1kHz		1	A
I_{RSM}	Non repetitive peak reverse current	tp = 100 ms square		2	A
Tstg	Storage temperature range			- 65 to + 175	°C
Tj	Maximum operating junction temperature *			175	°C
dV/dt	Critical rate of rise of reverse voltage			10000	V/µs

* : $\frac{dPtot}{dTj} < \frac{1}{Rth(j-a)}$ thermal runaway condition for a diode on its own heatsink

THERMAL RESISTANCES

Symbol	Parameter		Value	Unit
$R_{th\ (j-c)}$	Junction to case	TO-220AC / D^2PAK	3.0	°C/W
		ISOWATT220AC	5.5	

STATIC ELECTRICAL CHARACTERISTICS

Symbol	Parameter	Tests Conditions		Min.	Typ.	Max.	Unit
I_R *	Reverse leakage current	Tj = 25°C	$V_R = V_{RRM}$			100	µA
		Tj = 125°C			5	15	mA
V_F *	Forward voltage drop	Tj = 125°C	I_F = 7.5 A		0.5	0.57	V
		Tj = 25°C	I_F = 15 A			0.84	
		Tj = 125°C	I_F = 15 A		0.65	0.72	

Pulse test : * tp = 380 µs, δ < 2%

To evaluate the conduction losses use the following equation :
$P = 0.42 \times I_{F(AV)} + 0.020\ I_F^2{}_{(RMS)}$

Fig. 1: Average forward power dissipation versus average forward current.

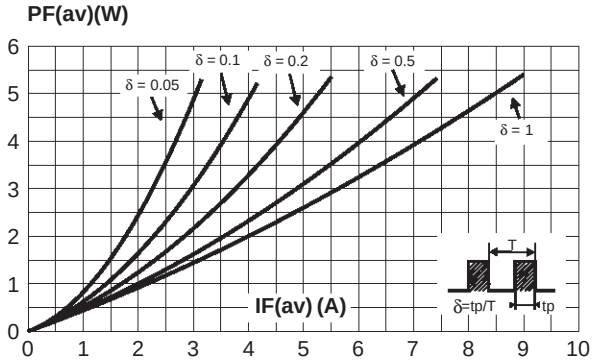

Fig. 2: Average current versus ambient temperature (δ = 0.5).

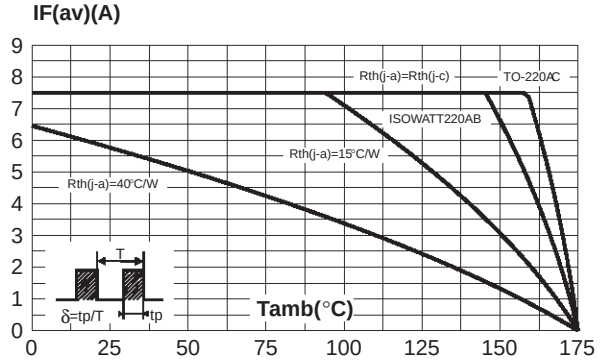

Fig. 3-1: Non repetitive surge peak forward current versus overload duration (maximum values) (TO-220AC and D^2PAK).

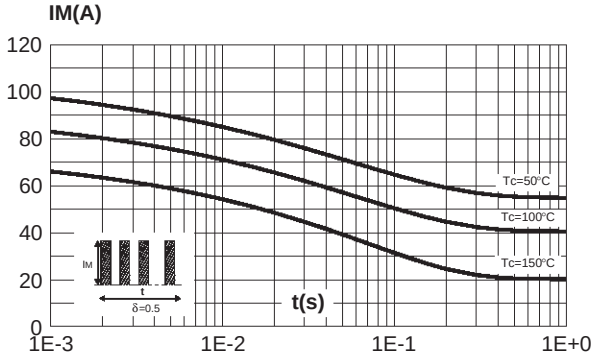

Fig. 3-2: Non repetitive surge peak forward current versus overload duration (maximum values) (ISOWATT220AC).

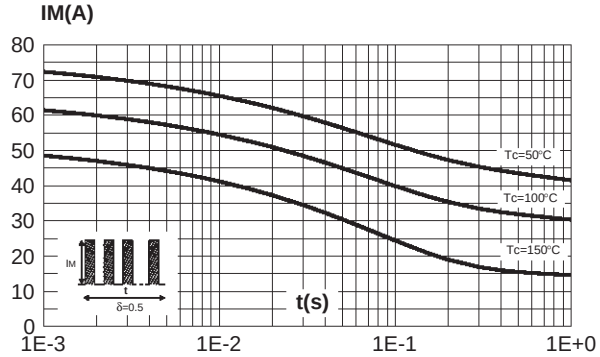

Fig. 4-1: Relative variation of thermal transient impedance junction to case versus pulse duration (TO-220AC and D^2PAK).

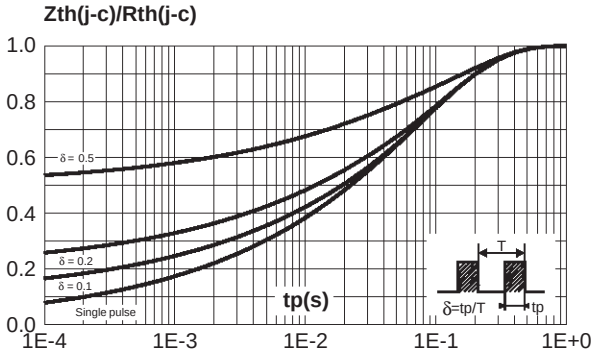

Fig. 4-2: Relative variation of thermal transient impedance junction to case versus pulse duration (ISOWATT220AC).

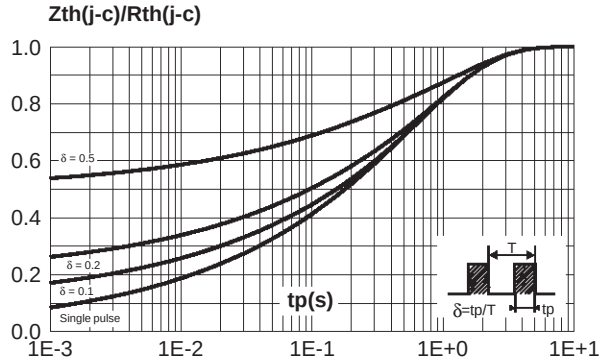

Fig. 5: Reverse leakage current versus reverse voltage applied (typical values).

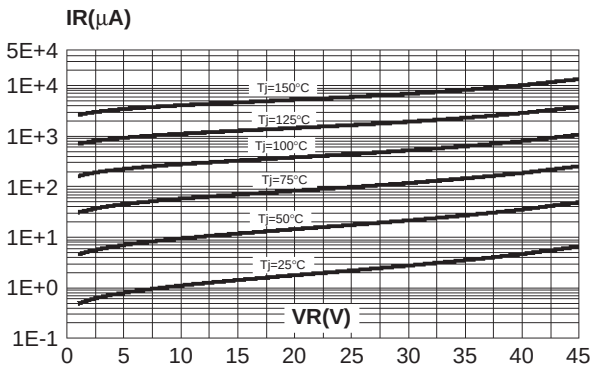

Fig. 6: Junction capacitance versus reverse voltage applied (typical values).

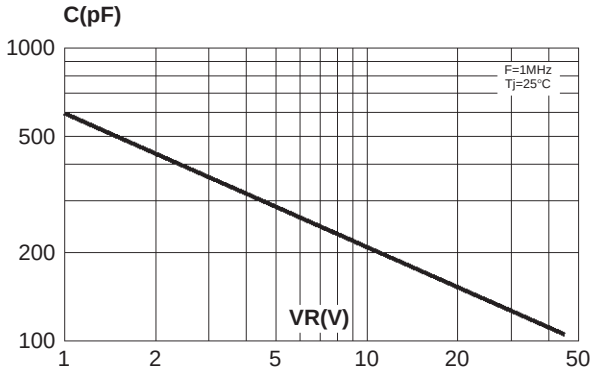

Fig. 7: Forward voltage drop versus forward current (maximum values).

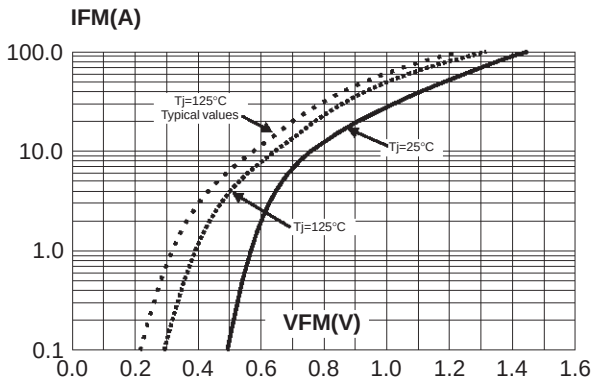

Fig. 8: Thermal resistance junction to ambient versus copper surface under tab (Epoxy printed circuit board, copper thickness: 35µm).

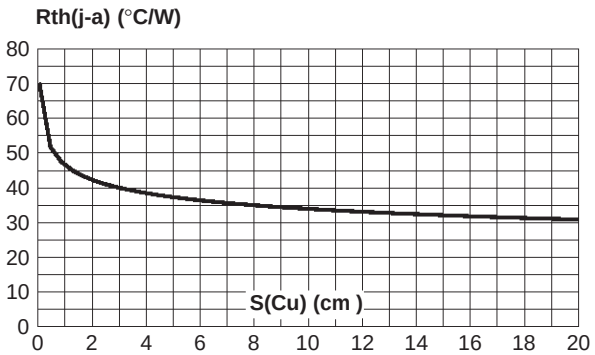

PACKAGE MECHANICAL DATA

D^2PAK (Plastic)

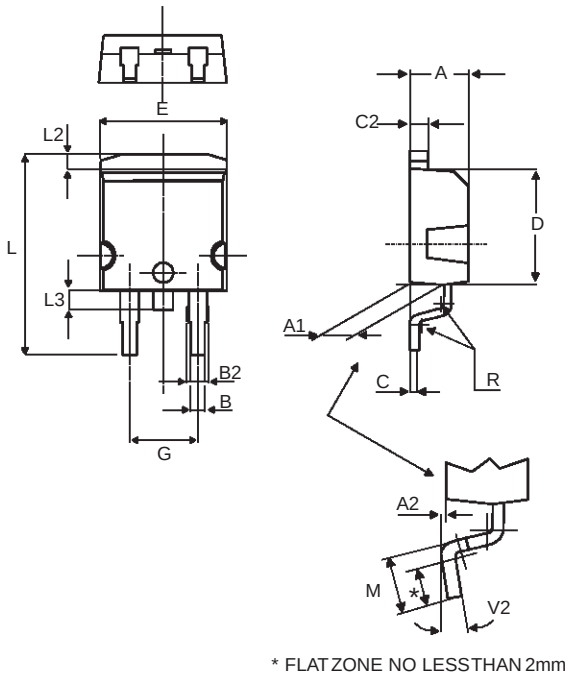

REF.	DIMENSIONS			
	Millimeters		Inches	
	Min.	Max.	Min.	Max.
A	4.40	4.60	0.173	0.181
A1	2.49	2.69	0.098	0.106
A2	0.03	0.23	0.001	0.009
B	0.70	0.93	0.027	0.037
B2	1.14	1.70	0.045	0.067
C	0.45	0.60	0.017	0.024
C2	1.23	1.36	0.048	0.054
D	8.95	9.35	0.352	0.368
E	10.00	10.40	0.393	0.409
G	4.88	5.28	0.192	0.208
L	15.00	15.85	0.590	0.624
L2	1.27	1.40	0.050	0.055
L3	1.40	1.75	0.055	0.069
M	2.40	3.20	0.094	0.126
R	0.40 typ.		0.016 typ.	
V2	0°	8°	0°	8°

FOOTPRINT DIMENSIONS (in millimeters)

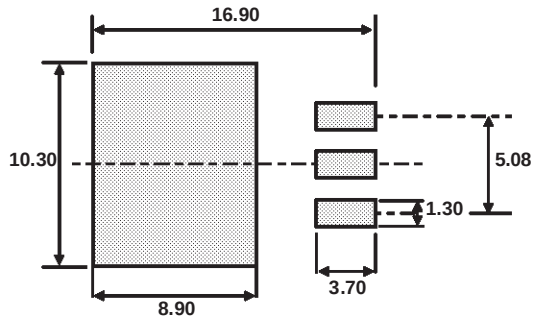

PACKAGE MECHANICAL DATA

TO-220AC

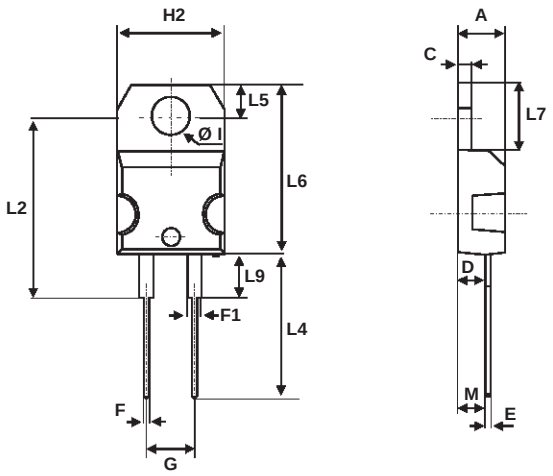

REF.	DIMENSIONS			
	Millimeters		Inches	
	Min.	Max.	Min.	Max.
A	4.40	4.60	0.173	0.181
C	1.23	1.32	0.048	0.051
D	2.40	2.72	0.094	0.107
E	0.49	0.70	0.019	0.027
F	0.61	0.88	0.024	0.034
F1	1.14	1.70	0.044	0.066
G	4.95	5.15	0.194	0.202
H2	10.00	10.40	0.393	0.409
L2	16.40 typ.		0.645 typ.	
L4	13.00	14.00	0.511	0.551
L5	2.65	2.95	0.104	0.116
L6	15.25	15.75	0.600	0.620
L7	6.20	6.60	0.244	0.259
L9	3.50	3.93	0.137	0.154
M	2.6 typ.		0.102 typ.	
Diam. I	3.75	3.85	0.147	0.151

PACKAGE MECHANICAL DATA
ISOWATT220AC

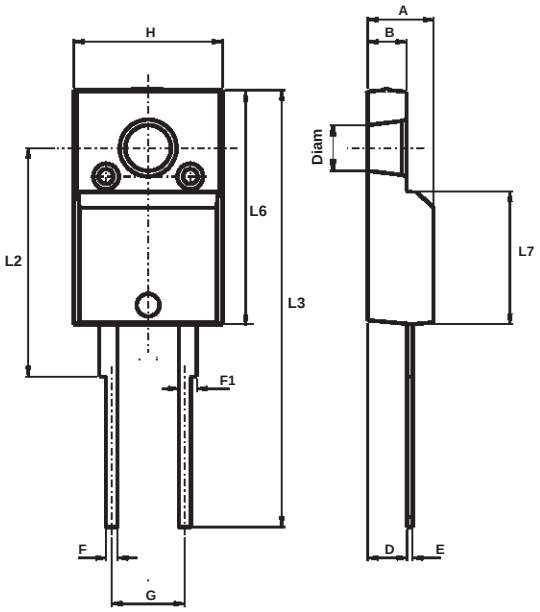

REF.	DIMENSIONS					
	Millimeters			Inches		
	Min.	Typ.	Max.	Min.	Typ.	Max.
A	4.40		4.60	0.173		0.181
B	2.50		2.70	0.098		0.106
D	2.40		2.75	0.094		0.108
E	0.40		0.70	0.016		0.028
F	0.75		1.00	0.030		0.039
F1	1.15		1.70	0.045		0.067
G	4.95		5.20	0.195		0.205
H	10.00		10.40	0.394		0.409
L2		16.00			0.630	
L3	28.60		30.60	1.125		1.205
L6	15.90		16.40	0.626		0.646
L7	9.00		9.30	0.354		0.366
Diam	3.00		3.20	0.118		0.126

Type	Marking	Package	Weight	Base qty	Delivery mode
STPS745D	STPS745D	TO-220AC	1.86 g.	50	Tube
STPS745F	STPS745F	ISOWATT220AC	2 g.	50	Tube
STPS745G	STPS745G	D^2PAK	1.48 g.	50	Tube
STPS745G-TR	STPS745G	D^2PAK	1.48 g.	1000	Tape & reel

- Cooling method: by conduction (C)
- Recommended torque value: 0.55 N.m
- Maximum torque value: 0.7 N.m.
- Epoxy meets UL94,V0