查询ADC12191供应商 捷多邦，专业PCB打样工厂，24小时加急出货



National Semiconductor

February 1999

# ADC12191
# 12-Bit, 10 MHz Self-Calibrating, Pipelined A/D Converter with Internal Sample & Hold

## General Description

The ADC12191 is a monolithic CMOS analog-to-digital converter capable of converting analog input signals into 12-bit digital words at 10 megasamples per second (MSPS). The ADC12191 utilizes an innovative pipeline architecture to minimize die size and power consumption. The ADC12191 uses self-calibration and error correction to maintain accuracy and performance over temperature.

The ADC12191 converter operates on a 5V power supply and can digitize analog input signals in the range of 0 to 2V. A single convert clock controls the conversion operation. All digital I/O is TTL compatible.

The ADC12191 is designed to minimize external components necessary for the analog input interface. An internal sample-and-hold circuit samples the analog input and an internal amplifier buffers the reference voltage input.

The ADC12191 is available in the 32-lead TQFP package and is designed to operate over the extended commercial temperature range of -40˚C to +85˚C.

## Features

- Single 5V power supply
- Simple analog input interface
- Internal Sample-and-hold
- Internal Reference buffer amplifier
- Low power consumption

## Key Specifications

| | |
|---|---|
| Resolution | 12 Bits |
| Conversion Rate | 10 Msps (min) |
| DNL | ±0.5 LSB (typ) |
| SNR | 63 dB (typ) |
| ENOB | 10 Bits (typ) |
| Analog Input Range | 2 Vpp (min) |
| Supply Voltage | +5V ±5% |
| Power Consumption, 10 MHz | 235 mW (typ) |

## Applications

- Image processing front end
- PC-based data acquisition
- Scanners
- Fax machines
- Waveform digitizer

## Connection Diagram

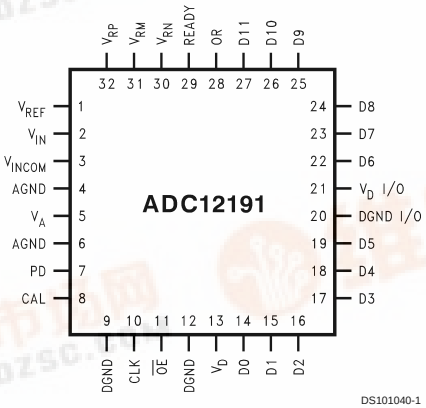


DS101040-1

© 1999 National Semiconductor Corporation DS101040



找PDF 维库一下 pdf.dzsc.com

## Ordering Information

| Industrial (−40˚C ≤ TA ≤ +85˚C) | Package |
|---|---|
| ADC12191CIVT | 32 pin TQFP |
| ADC12181 EVAL | Evaluation Board |

## Simplified Block Diagram

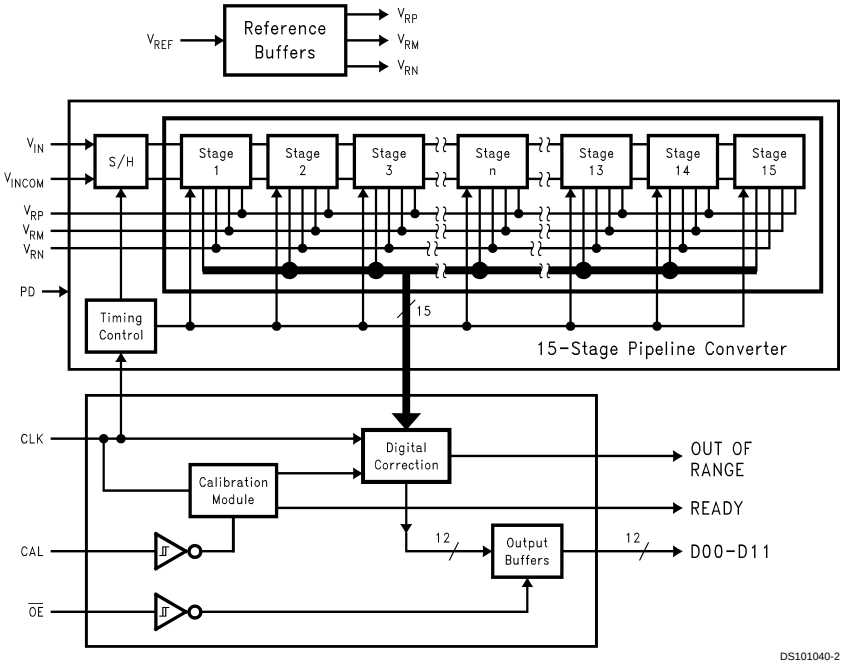

## Pin Descriptions and Equivalent Circuits #2

| No. | Symbol | Equivalent Circuit | Description |
|---|---|---|---|
| 2 | $V_{IN}$ | 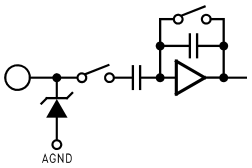 | Analog signal input. With a 2.0V reference voltage, input signal voltages in the range of 0 to 2.0 Volts will be converted. See section 1.2. |
| 1 | $V_{REF}$ | | Reference voltage input. This pin should be driven from an accurate, stable reference source in the range of 1.8 to 2.2V and bypassed to a low-noise analog ground with a monolithic ceramic capacitor, nominally 0.01µF. See section 1.1. |
| 32 | $V_{RP}$ | 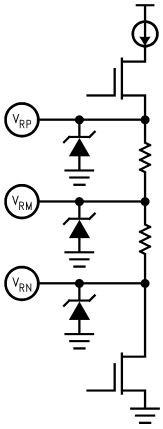 | Positive reference bypass pin. Bypass with a 0.1µF capacitor. Do not connect anything else to this pin. See section 3.1 |
| 31 | $V_{RM}$ | | Reference midpoint bypass pin. Bypass with a 0.1µF capacitor. Do not connect anything else to this pin. See section 3.1 |
| 30 | $V_{RN}$ | | Negative reverence bypass pin. Bypass with a 0.1µF capacitor. Do not connect anything else to this pin. See section 3.1 |
| 10 | CLOCK | 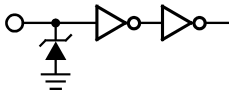 | Sample Clock input, TTL compatible. Maximum amplitude should not exceed 3V. |
| 8 | CAL | | Calibration request, active High. Calibration cycle starts when CAL returns to logic low. CAL is ignored during power-down mode. See section 2.2. |
| 7 | PD | | Power-down, active High, ignored during calibration cycle. See paragraph 2.4 |
| 11 | $\overline{OE}$ | | Output enable control, active low. When this pin is high the data outputs are in Tri-state (high-impedance) mode. |
| 28 | OR | 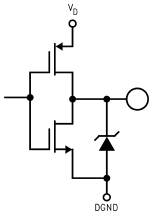 | Over range indicator. This pin is at a logic High for $V_{IN} < 0$ or for $V_{IN} > V_{REF}$. |
| 29 | READY | | Device ready indicator, active High. This pin is at a logic Low during a calibration cycle and while the device is in the power down mode. |
| 14-19, 22-27 | D0 - D11 | 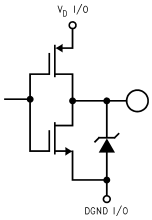 | Digital output word, CMOS compatible. D0 (pin 14) is LSB, D11 (pin 27) is MSB. Load with no more than 50pF. |

## Pin Descriptions and Equivalent Circuits #2 (Continued)

| No. | Symbol | Equivalent Circuit | Description |
|---|---|---|---|
| 3 | $V_{IN\ com}$ | | Analog input common. Connect to a quiet point in analog ground near the driving device. See section 1.2. |
| 5 | $V_A$ | | Positive analog supply pin. Connect to a clean, quiet voltage source of +5V. $V_A$ and $V_D$ should have a common supply and be separately bypassed with a 5µF to 10µF capacitor and a 0.1µF chip capacitor. |
| 4, 6 | AGND | | The ground return for the analog supply. AGND and DGND should be connected together close to the ADC12191 package. See section 5.0. |
| 13 | $V_D$ | | Positive analog supply pin. Connect to a clean, quiet voltage source of +5V. $V_A$ and $V_D$ should have a common supply and be separately bypassed with a 5µF to 10µF capacitor and a 0.1 µF chip capacitor. |
| 9, 12 | DGND | | The ground return for the analog supply. AGND and DGND should be connected together close to the ADC12191 package. See section 5.0 |
| 21 | $V_D$ I/O | | The digital output driver supply pin. This pin can be operated from a supply voltage of 3V to 5V, but the voltage on this pin should never exceed the $V_D$ supply pin voltage. |
| 20 | DGND I/O | | The ground return for the output drivers. This pin should be returned to a point in the digital ground that is removed from the other ground pins of the ADC12191. |

## Absolute Maximum Ratings (Notes 1, 2)

**If Military/Aerospace specified devices are required, please contact the National Semiconductor Sales Office/ Distributors for availability and specifications.**

| | |
|---|---|
| Supply Voltage | 6.5V |
| Voltage on Any Output | −0.3V to $V^+$ +0.3V |
| Input Current at Any Pin (Note 3) | ±25mA |
| Package Input Current (Note 3) | ±50mA |
| Package Dissipation | See (Note 4) |
| ESD Susceptibility | |
| Human Body Model | 1500V |
| Machine Model | 150V |
| Soldering Temp., Infrared, 10 sec. (Note 6) | 300˚C |
| Storage Temp. | −65˚C to +150˚C |
| Maximum Junction Temp. | 150˚C |

## Operating Ratings

| | |
|---|---|
| Operating Temp. Range | −40˚C ≤ $T_A$ ≤ +85˚C |
| Supply Voltage | +4.75V to +5.25V |
| $V_D$ I/O | +2.7V to $V_D$ |
| $V_{REF}$ Input | 1.8V to 2.2V |
| CLOCK, CAL, PD, OE | −0.05V to $V_D$ + 0.05V |
| \|AGND −DGND\| | ≤100mV |

## Converter Electrical Characteristics

The following specifications apply for AGND = DGND = DGND I/O = 0V, $V_A$ = $V_D$ = $V_D$ I/O = +5V, PD = +5V, $V_{REF}$ = +2.0V, $f_{CLK}$ = 10MHz, $C_L$ = 50 pF/pin. After Auto-Cal at Temperature. **Boldface limits apply for $T_A$ = $T_J$ to $T_{MIN}$ to $T_{MAX}$:** all other limits $T_A$ = $T_J$ = 25˚C (Notes 7, 8) and (Note 9)

| Symbol | Parameter | Conditions | | Typical (Note 10) | Limits (Note 11) | Units (Limits) |
|---|---|---|---|---|---|---|
| **Static Converter Characteristics** | | | | | | |
| | Resolution with No Missing Codes | | | | **12** | Bits(min) |
| INL | Integral Non Linearity | | | ±0.7 | **±2.3** | LSB( max) |
| DNL | Differential Non Linearity | | | ±0.4 | **±0.95** | LSB( max) |
| | Full-Scale Error | | | ±0.05 | **±0.3** | %FS(max) |
| | Zero Error | | | ±0.15 | **±0.3** | %FS(max) |
| **Dynamic Converter Characteristics** | | | | | | |
| BW | Full Power Bandwidth | | | 100 | | MHz |
| SNR | Signal-to-Noise Ratio | $f_{in}$ = 5 MHz, $V_{IN}$ = 2.0$V_{P-P}$ | | 63 | | dB |
| SINAD | Signal-to-Noise & Distortion | $f_{in}$ = 5 MHz, $V_{IN}$ = 2.0$V_{P-P}$ | | 62 | | dB |
| ENOB | Effective Number of Bits | $f_{in}$ = 5 MHz, $V_{IN}$ = 2.0$V_{P-P}$ | | 10 | | Bits |
| THD | Total Hamonic Distortion | $f_{in}$ = 5 MHz, $V_{IN}$ = 2.0$V_{P-P}$ | | 72 | | dB |
| SFDR | Spurious Free Dynamic Range | $f_{in}$ = 5 MHz, $V_{IN}$ = 2.0$V_{P-P}$ | | 71 | | dB |
| **Reference and Analog Input Characteristics** | | | | | | |
| $V_{IN}$ | Input Voltage Range | $V_{REF}$ = 2.0V | | | **0**<br>**$V_{REF}$** | V(min)<br>V(max) |
| $C_{IN}$ | $V_{IN}$ Input Capacitance | $V_{IN}$ = 1.0Vdc + 0.7Vrms | (CLK LOW) | 10 | | pF |
| | | | (CLK HIGH) | 15 | | pF |
| $V_{REF}$ | Reference Voltage (Note 14) | | | 2.00 | **1.8**<br>**2.2** | V(min)<br>V(max) |
| | Reference Input Leakage Current | | | 10 | | µA |
| | Reference Input Resistance | | | 1 | | MΩ(min) |

## DC and Logic Electrical Characteristics

The following specifications apply for AGND = DGND = DGND I/O = 0V, $V_A = V_D = V_D$ I/O = +5V, PD = +5V, $V_{REF}$ = +2.0V, $f_{CLK}$ = 10 MHz, $C_L$ = 50 pF/pin. After Auto-Cal at Temperature. **Boldface limits apply for $T_A = T_{MIN}$ to $T_{MAX}$;** all other limits $T_A = T_J$ = 25˚C (Note 7) (Note 8) and (Note 9)

| Symbol | Parameter | Conditions | Typical (Note 10) | Limits (Note 11) | Units (Limits) |
|---|---|---|---|---|---|
| **CLK, $\overline{OE}$ Digital Input Characteristics** | | | | | |
| $V_{IH}$ | Logical "1" Input Voltage | V+ = 5.25V | | **2.0** | V(min) |
| $V_{IL}$ | Logical "0" Input Voltage | V+ = 4.75V | | **0.8** | V(min) |
| $I_{IH}$ | Logical "1" Input Current | $V_{IN}$ = 5.0V | 5 | | µA |
| $I_{IL}$ | Logical "0" Input Current | $V_{IN}$ = 0V | −5 | | µA |
| $C_{IN}$ | $V_{IN}$ Input Capacitance | | 8 | | pF |
| **D0 - D11 Digital Output Characteristics** | | | | | |
| $V_{OH}$ | Logical "1" Output Voltage | $I_{OUT}$ = −1mA | | **4** | V (min) |
| $V_{OL}$ | Logical "0" Output Voltage | $I_{OUT}$ = 1.6mA | | **0.4** | V (max) |
| $I_{OZ}$ | TRI-STATE® Output Current | $V_{OUT}$ = 3V or 5V | 10 | | µA |
| | | $V_{OUT}$ = 0V | −10 | | µA |
| $+I_{SC}$ | Output Short Circuit Source Current | VDDO= 3V, $V_{OUT}$ = 0V | −14 | | mA(min) |
| $-I_{SC}$ | Output Short Circuit Sink Current | VDDO= 3V, $V_{OUT} = V_O$ | 16 | | mA(min) |
| **Power Supply Characteristics** | | | | | |
| $I_A$ | Analog Supply Current | PD = VDDO<br>PD = DGND | 2.5<br>45 | **4**<br>**55** | mA(max)<br>mA(max) |
| $I_D$ | Digital Supply Current | PD = VDDO<br>PD = DGND | 0.5<br>2 | **2**<br>**3** | mA(max)<br>mA(max) |
| | Total Power Consumption | PD = VDDO<br>PD = DGND | 15<br>235 | **30**<br>**290** | mW(max)<br>mW(max) |

## AC Electrical Characteristics

The following specifications apply for AGND = DGND = DGND I/O = 0V, $V_A = V_D = V_D$ I/O = +5V, PD = +5V, $V_{REF}$ = +2.0V, $f_{CLK}$ = 10 MHz, $C_L$ = 50 pF/pin. After Auto-Cal at Temperature. **Boldface limits apply for $T_A = T_{MIN}$ to $T_{MAX}$;** all other limits $T_A = T_J$ = 25˚C (Note 7) (Note 8) and (Note 10)

| Symbol | Parameter | Conditions | Typical (Note 10) | Limits (Note 11) | Units (Limits) |
|---|---|---|---|---|---|
| $f_{CLK}$ | Clock Frequency | | **1** | <br>**10** | MHz(min)<br>MHz(max) |
| | Clock Duty Cycle | | 50 | | % |
| $t_{CONV}$ | Conversion Latency | | 10 | | Clock Cycles |
| $t_{OD}$ | Data output delay after rising clk edge | | 40 | | ns |
| $t_{DIS}$ | Data outputs into Tristate mode | | 21 | | nA (max) |
| $t_{EN}$ | Data outputs active after Tristate | | 21 | | ns (max) |
| $t_{WCAL}$ | Calibration request pulse width | | | 3 | Tclk(min) |
| $t_{RDYC}$ | Ready Low after CAL request | | | 3 | Tclk |
| $t_{CAL}$ | Calibration cycle | | | 4000 | Tclk |
| $t_{WPD}$ | Power-down pulse width | | | 3 | Tclk(min) |
| $t_{RDYPD}$ | Ready Low after PD request | | | 3 | Tclk |
| $t_{PD}$ | Power down mode exit cycle | | | 4000 | Tclk |

**Note 1:** Absolute Maximum Ratings indicate limits beyond which damage to the device may occur. Operating Ratings indicate conditions for which the device is functional, but do not guarantee specific performance limits. For guaranteed specifications and test conditions, see the Electrical Characteristics. The guaranteed specifications apply only for the test conditions listed. Some performance characteristics may degrade when the device is not operated under the listed test conditions.

**Note 2:** All voltages are measured with respect to GND = AGND = DGND = 0V, unless otherwise specified.

## AC Electrical Characteristics (Continued)

**Note 3:** When the input voltage at any pin exceeds the power supplies (that is, $V_{IN}$ < AGND, or $V_{IN}$ > $V_A$, $V_D$ or $V_D$ I/O), the current at that pin should be limited to 25 mA. The 50 mA maximum package input current rating limits the number of pins that can safely exceed the power supplies with an input current of 25 mA to two.

**Note 4:** The absolute maximum junction temperatures ($T_J$max) for this device is 150˚C. The maximum allowable power consumption is dictated by $T_J$max, the junction-to-ambient thermal resistance ($\theta_{JA}$), and the ambient temperature, ($T_A$), and can be calculated using the formula $P_D$MAX = ($T_J$max - $T_A$ )/$\theta_{JA}$. In the 32-pin TQFP, $\theta_{JA}$ is 74˚C/W, so $P_D$MAX = 1,689 mW at 25˚C and 1,013 mW at the maximum operating ambient temperature of 75˚C. Note that the power consumption of this device under normal operation will typically be about 255 mW (typical power consumption + 20 mW TTL output loading). The values for maximum power consumption listed above will be reached only when the ADC12191 is operated in a severe fault condition (e.g. when input or output pins are driven beyond the power supply voltages, or the power supply polarity is reversed). Obviously, such conditions should always be avoided.

**Note 5:** Human body model is 100 pF capacitor discharged through a 1.5kΩ resistor. Machine model is 220 pf discharged through ZERO Ohms.

**Note 6:** See AN450, "Surface Mounting Methods and Their Effect on Product Reliability", or the section entitled "Surface Mount" found in any post 1986 National Semiconductor Linear Data Book, for other methods of soldering surface mount devices.

**Note 7:** The inputs are protected as shown below. Input voltage magnitudes up to 5V above $V_A$ or to 5V below GND will not damage this device, provided current is limited per Note 3. However, errors in the A/D conversion can occur if the input goes above $V_A$ or below GND by more than 100 mV. As an example, if $V_A$ is 4.75V, the full-scale input voltage must be ≤4.85V to ensure accurate conversions.

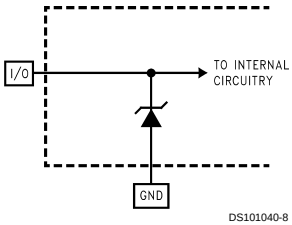


**Note 8:** To guarantee accuracy, it is required that $|V_A - V_D| \leq 100$mV and separate bypassed capacitors are used at each power supply pin.

**Note 9:** With the test condition for $V_{REF}$ = +2.0V, the 12-bit LSB is 488µV.

**Note 10:** Typical figures are at $T_A$ = $T_J$ = 25˚C, and represent most likely parametric norms.

**Note 11:** Tested limits are guaranteed to National's AOQL (Average Outgoing Quality Level).

**Note 12:** Integral Non Linearity is defined as the deviation of the analog value, expressed in LSBs, from the straight line that passes through positive full-scall and zero.

**Note 13:** Timing specifications are tested at the TTL logic levels, $V_{IL}$ = 0.4V for a falling edge and $V_{IH}$ = 2.4V for a rising edge. TRI-STATE output voltage is forced to 1.4V.

**Note 14:** Optimum SNR performance will be obtained by keeping the reference input in the 1.8V to 2.2V range. The LM4041CIM3-ADJ (SOT-23 package) or the LM4041CIZ-ADJ (TO-92 package) bandgap voltage reference is recommended for this application.

## Transfer Characteristics

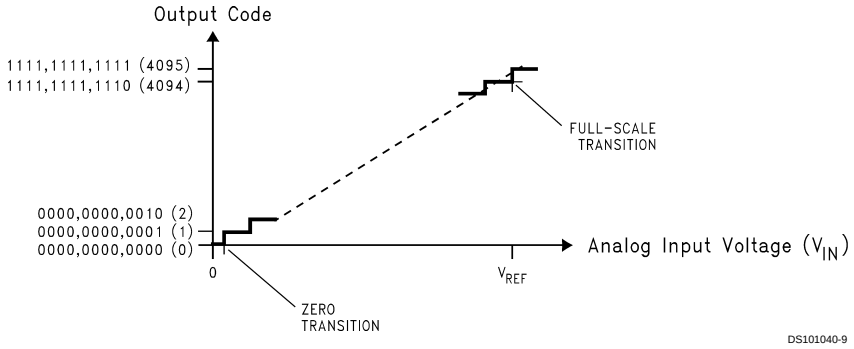


**FIGURE 1. Transfer Characteristic**

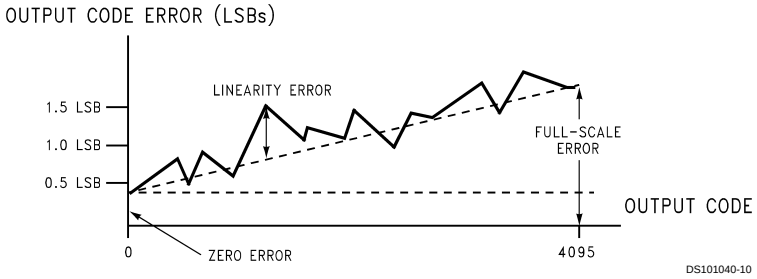


**FIGURE 2. Errors Minimized by the Auto-Cal Cycle**

## Typical Performance Characteristics

**INL vs Temperature**

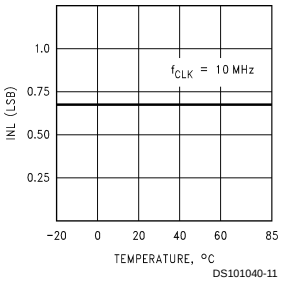


**DNL vs Temperature**

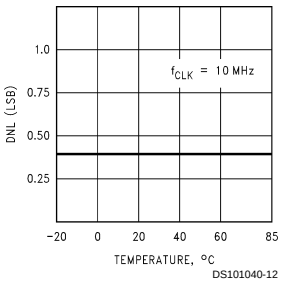


**SNR vs Temperature**

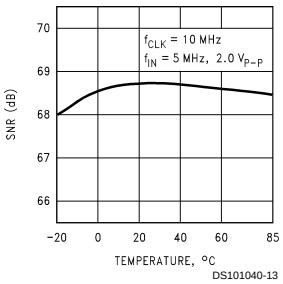

## Typical Performance Characteristics (Continued)

**SINAD vs Temperature**

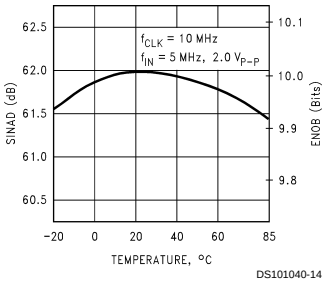


**THD vs Temperature**

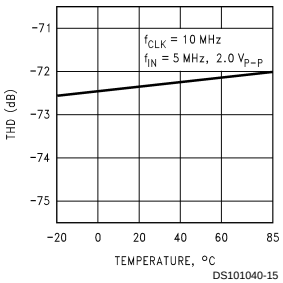


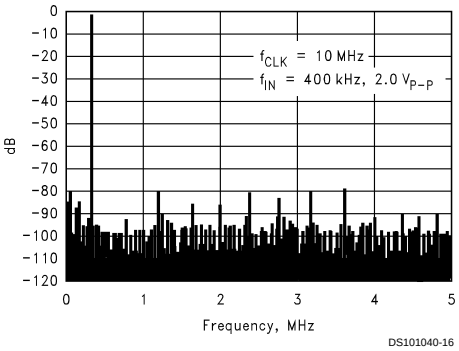


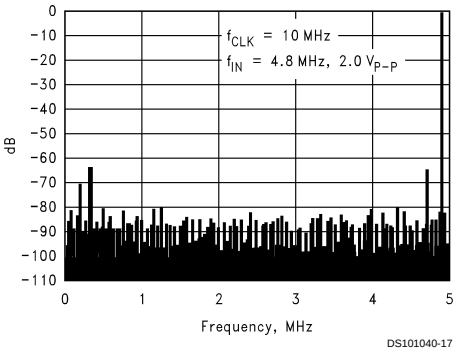


## Specification Definitions

**DIFFERENTIAL NON-LINEARITY (DNL)** is the measure of the maximum deviation from the ideal step size of 1 LSB.

**EFFECTIVE NUMBER OF BITS (ENOB, or EFFECTIVE BITS)** is another method of specifying Signal-to-Noise and Distortion Ratio, or SINAD. ENOB is defined as (SINAD - 1.76) / 6.02.

**FULL POWER BANDWIDTH** is a measure of the frequency at which the reconstructed output fundamental drops 3 dB below its low frequency value for a full scale input. The test is performed with $f_{IN}$ equal to 100 KHz plus integer multiples of $f_{CLK}$. The input frequency at which the output is −3 dB relative to the low frequency input signal is the full power bandwidth.

**FULL SCALE ERROR** is the difference between the input voltage just causing a transition to positive full scale and $V_{REF}$ -1.5 LSB.

**INTEGRAL NON-LINEARITY (INL)** is a measure of the deviation of each individual code from a line drawn from negative full scale (½ LSB below the first code transition) through positive full scale (1½ LSB above the last code transition). The deviation of any given code from this straight line is measured from the center of that code value.

**INTERMODULATION DISTORTION (IMD)** is the creation of additional spectral components as a result of two sinusoidal frequencies being applied to the ADC input at the same time. It is defined as the ratio of the power in the intermodulation products to the total power in the original frequencies. IMD is usually expressed in dB.

**PIPELINE DELAY (LATENCY)** is the number of clock cycles between initiation of conversion and the availability of that conversion result at the output. New data is available at every clock cycle, but the data lags the conversion by the pipeline delay.

**SIGNAL TO NOISE PLUS DISTORTION (S/(N+D) or SINAD)** is the ratio expressed in dB, of the rms value of the input signal to the rms value of all of the other spectral components below half the clock frequency, including harmonics but excluding dc.

**SIGNAL TO NOISE RATIO (SNR)** is the ratio of the rms value of the input signal to the rms value of the other spectral components below one-half the sampling frequency, not including harmonics or dc.

**SPURIOUS FREE DYNAMIC RANGE (SFDR)** is the difference, expressed in dB, between the rms values of the input signal and the peak spurious signal, where a spurious signal is any signal present in the output spectrum that is not present at the input.

**TOTAL HARMONIC DISTORTION (THD)** is the ratio of the rms total of the first six harmonic components, to the rms value of the input signal.

**ZERO ERROR** is the difference between the ideal input voltage (½ LSB) and the actual input voltage that causes an output code transition from zero to one.

## Timing Diagrams

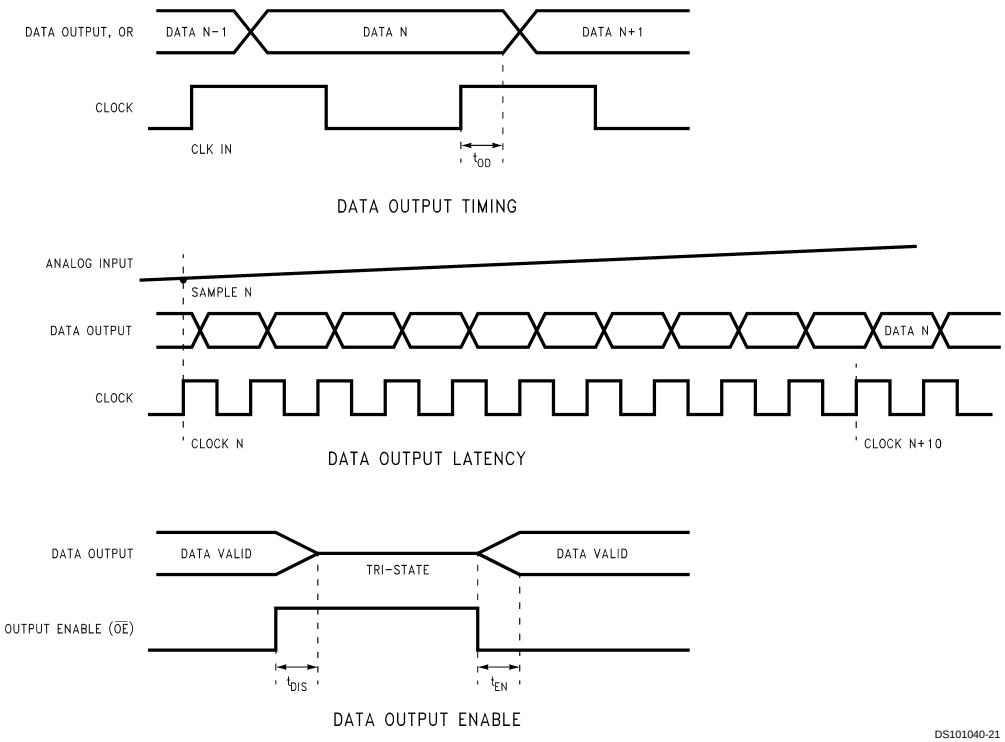


**FIGURE 3. Data Output Timing**

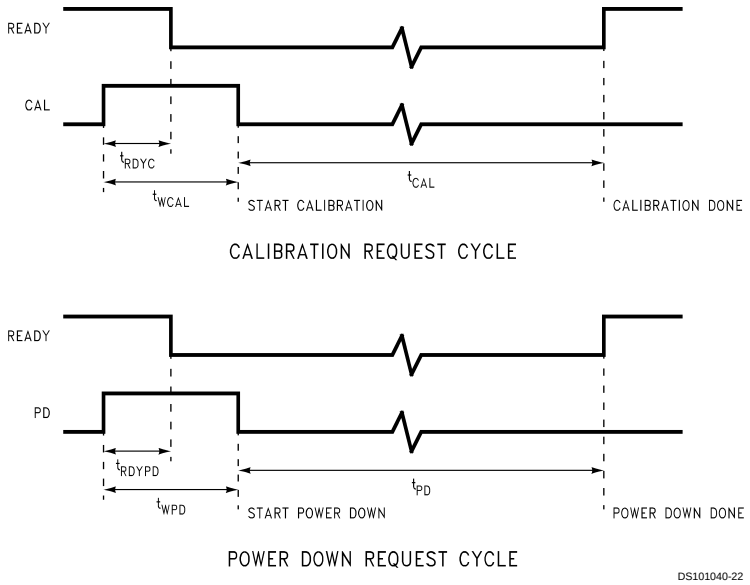


**FIGURE 4. Reset and Calibration Timing**

## Functional Description

The ADC12191 is a monolithic CMOS analog-to-digital converter capable of converting analog input signals into 12-bit digital words at 10 megasamples per second (MSPS). This device utilizes a proprietary pipeline architecture and algorithm to minimize die size and power consumption. The ADC12191 uses self-calibration and digital error correction to maintain accuracy and performance over temperature. The ADC12191 has an input sample-and-hold amplifier and internal reference buffer. The analog input and the reference voltage are converted to differential signals for internal use. Using differential signals in the analog conversion core reduces crosstalk and noise pickup from the digital section and power supply.

The pipeline conversion core has 15 sequential signal processing stages. Each stage receives an analog signal from the previous stage (called "residue") and produces a 1-bit digital output that is sent to the digital correction module. At each stage the analog signal received from the previous stage is compared to an internally generated reference level. It is then amplified by a factor of 2, and, depending on the output of the comparator, the internal reference signal may be subtracted from the amplifier output. This produces the residue that is passed to the next stage.

The calibration module is activated at power-on or by user request. During calibration the conversion core is put into a special mode of operation in order to determine inherent errors in the analog conversion blocks and to determine correction coefficients for each digital output bit from the conversion core and stores these coefficients in RAM. The digital correction module uses the coefficients in RAM to convert the raw data bits from the conversion core into the 12-bit digital output code.

## Applications Information

### 1.0 Analog Inputs.

The ADC12191 has two single-ended analog inputs. $V_{REF}$ is the reference input and $V_{IN}$ is the signal input.

**1.1 Reference Input** The $V_{REF}$ input must be driven from an accurate, stable reference voltage source. of 1.8V to 2.2V, and bypassed to a clean, quiet point in analog ground.

**1.2 Analog Signal Input** The $V_{IN}$ input must be driven with a low impedance signal source that does not add any distortion to the input signal. The ground reference for the $V_{IN}$ input is the $V_{INCOM}$ pin. The $V_{INCOM}$ pin must be connected to a clean, quiet point in analog ground.

### 2.0 Digital Inputs

The ADC12191 has four digital inputs. They are CLOCK, CAL, $\overline{OE}$ and PD.

**2.1 CLOCK** The CLOCK signal drives an internal phase delay loop to create timing for the ADC. The clock input should be driven with a stable, low phase jitter TTL level clock signal in the range of 1 to 10 MHz. The trace carrying the clock signal should be as short as possible. This trace should not cross any other signal line, analog or digital, not even at 90˚. A 100 Ohm resistor should be placed in series with the CLOCK pin, as close to the pin as possible.

**2.2 CAL** The level sensitive CAL input must be pulsed high for at least three clock cycles to begin ADC calibration. Calibration should be performed after resetting the ADC, and after the temperature has changed by more than 50˚C since the last calibration was performed.

Calibration should be performed at the same clock frequency that the ADC12191 will be used for conversions to minimize offset errors. Calibration takes 4000 clock cycles. **Irrelevant data may appear during the calibration cycle.**

**2.3 $\overline{OE}$ Pin** The $\overline{OE}$ pin is used to control the state of the outputs. When the $\overline{OE}$ pin is low, the output buffers go into the active state. When the $\overline{OE}$ input is high, the output buffers are in the high impedance state.

**2.4 PD Pin** The PD pin, when high, holds the ADC12191 in a power-down mode where power consumption is typically less than 15 mW to conserve power when the converter is not being used. The ADC12191 will begin normal operation within $t_{PD}$ after this pin is brought low, provided a valid CLOCK input is present. The data in the pipeline is corrupted while in the power down mode. The ADC12191 should be recalibrated after a power-down cycle to ensure optimum performance.

### 3.0 Outputs

The ADC12191 has three analog outputs: reference output voltages $V_{RN}$, $V_{RM}$ , and $V_{RP}$. There are 14 digital outputs: 12 Data Output pins, Ready and OR (Out of Range).

**3.1 Reference Output Voltages** The reference output voltages are made available only for the purpose of bypassing with capacitors to a clean analog ground. The recommended bypass capacitors are 0.1µF ceramic chip capacitors. Do not load these pins.

**3.2 Ready Output** The Ready output goes high to indicate that the converter is ready for operation. This signal will go low when the converter is in Calibration or Power Down mode.

**3.3 OR (Out of Range) Output** The OR output goes high when the analog input is below GND or above $V_{REF}$. This output is low when the input signal is in the valid range of operation ($0V \le V_{IN} \le V_{REF}$).

**3.4 Data Outputs** The Data Outputs are TTL/CMOS compatible. The output data format is 12 bits straight binary.

Minimizing the digital output currents will help to minimize noise due to output switching. This can be done by connecting buffers between the ADC outputs and any other circuitry. Only one buffer input should be connected to each output. Additionally, inserting series resistors of 47 to 56 Ohms right at the digital outputs, close to the ADC pins, will isolate the outputs from other circuitry and limit output currents.

### 4.0 Power Supply Considerations

Each power pin should be bypassed with a parallel combination of a 10µF capacitor and a 0.1µF ceramic chip capacitor. The chip capacitors should be within 1/2 centimeter of the power pins. Leadless chip capacitors are preferred because they provide low lead inductance.

The converter's digital logic supply ($V_D$) should be well isolated from the supply that is used for other digital circuitry on the board. A common power supply should be used for both $V_A$ (analog supply) and $V_D$ (digital supply), and each of these supply pins should be separately bypassed with a 0.1µF ceramic capacitor and a low ESR 10µF capacitor. A ferrite bead or inductor should be used between $V_A$ and $V_D$ to prevent noise coupling from the digital supply into the analog circuit.

$V_D$ I/O is the power pin for the output driver. This pin may be supplied with a potential between 3V and 5V. This makes it easy to interface the ADC12191 with 3V or 5V logic families. Powering the $V_D$ I/O from 3 Volts will also reduce power consumption and noise generation due to output switching. **DO**

## Applications Information (Continued)

**NOT operate the $V_D$ I/O at a voltage higher than $V_D$ or $V_A$!** All power supplies connected to the device should be applied simultaneously.

As is the case with all high speed converters, the ADC12191 is sensitive to power supply noise. Accordingly, the noise on the analog supply pin should be minimized, keeping it below 100mV P-P.

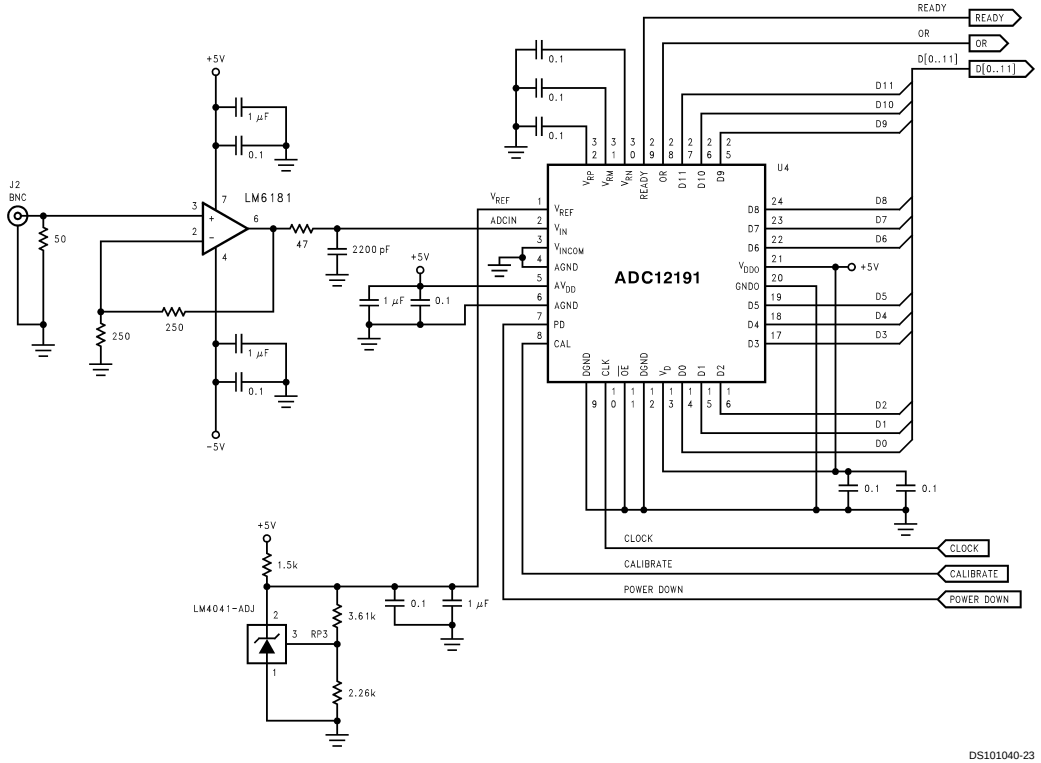


**FIGURE 5. Basic Connections Diagram**

### 5.0 Layout and Grounding

Proper grounding and routing of all signals is essential to ensure accurate conversion. Separate analog and digital ground planes that are connected beneath the ADC12191 are required to achieve specified performance. The analog and digital grounds may be in the same layer, but should be separated from each other and should never overlap each other. Separation should be at least 1/8 inch, where possible.

The ground return for the digital output buffer supply (DGND I/O) carries the ground current for the output drivers. This pin should be connected to the system digital ground. The current on this pin can exhibit high transients that could add noise to the conversion process. To prevent this from happening, the DGND I/O pin should NOT be connected in close proximity to any of the ADC12191's other ground pins.

Capacitive coupling between the typically noisy digital ground plane and the sensitive analog circuitry can lead to poor performance that may seem impossible to isolate and remedy. The solution is to keep the analog circuitry separated from the digital circuitry and from the digital ground plane.

Digital circuits create substantial supply and ground current transients. The logic noise thus generated could have significant impact upon system noise performance. The best logic family to use in systems with A/D converters is one which employs non-saturating transistor designs, or has low noise characteristics, such as the 74LS, 74HC(T) and 74 AC(T)Q families. The worst noise generators are logic families that draw the largest supply current transients during clock or signal edges, like the 74F and the 74AC(T) families.

Since digital switching transients are composed largely of high frequency components, total ground plane copper weight will have little effect upon the logic-generated noise. This is because of the skin effect. Total surface area is more important than is total ground plane volume.

An effective way to control ground noise is by connecting the analog and digital ground planes together beneath the ADC with a copper trace that is very narrow compared with the rest of the ground plane. This narrowing beneath the converter provides a fairly high impedance to the high frequency components of the digital switching currents, directing them away from the analog pins. The relatively lower frequency

## Applications Information (Continued)

analog ground currents do not create a significant voltage drop across the impedance of this narrow ground connection.

To maximize accuracy in high speed, high resolution systems, avoid crossing analog and digital signal traces. It is important to keep any clock lines isolated from ALL other lines. Even the generally accepted 90 degree crossing should be avoided as even a little coupling can cause problems at high frequencies. This is because other lines can introduce phase noise (jitter) into the clock line, which can lead to degradation of SNR.

Best performance at high frequencies and at high resolution is obtained with a straight signal path. That is, the signal path through all components should form a straight line wherever possible.

Be especially careful with the layout of inductors. Mutual inductance can change the characteristics of the circuit in which they are used. Inductors should not be placed side by side, even with just a small part of their bodies beside each other.

The analog input should be isolated from noisy signal traces to avoid coupling of spurious signals into the input. Any external component (e.g., a filter capacitor) connected between the converter's input and ground should be connected to a very clean point in the analog ground plane.

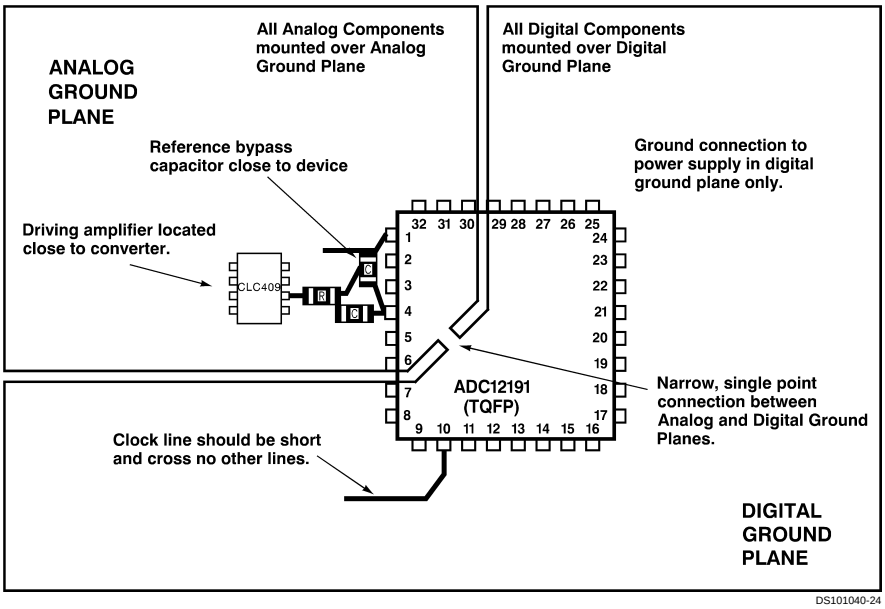


**FIGURE 6. Layout example**

*Figure 6* gives an example of a suitable layout. All analog circuitry (input amplifiers, filters, reference components, etc.) should be placed on or over the analog ground plane. All digital circuitry and I/O lines should be placed over the digital ground plane.

All ground connections should have a low inductance path to ground.

### 6.0 Layout and Grounding

The ADC12191 can achieve impressive dynamic performance. To achieve the best dynamic performance with the ADC12191, the clock source driving the CLK input must be free of jitter. For best ac performance, isolating the ADC clock from any digital circuitry should be done with adequate buffers, as with a clock tree. See *Figure 7*.

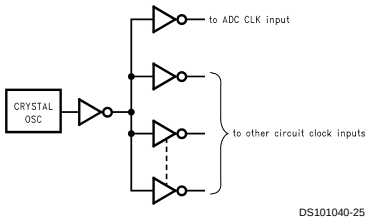


**FIGURE 7. Isolating the ADC clock from other circuitry with a clock tree.**

It is good practice to keep the ADC clock line as short as possible and to keep it well away from any other signals. Other signals can introduce phase noise (jitter) into the clock

## Applications Information (Continued)

signal, which can lead to increased distortion. Even lines with 90˚ crossings have capacitive coupling, so try to avoid even these 90˚ crossings of the clock line.

### 7.0 Common Application Pitfalls

**Driving the inputs (analog or digital) beyond the power supply rails.** For proper operation, all inputs should not go more than 300mV beyond the supply rails (more than 300mV below the ground pins or 300mV above the supply pins). Exceeding these limits on even a transient basis may cause faulty or erratic operation. It is not uncommon for high speed digital circuits (e.g., 74F and 74AC devices) to exhibit undershoot that goes more than a volt below ground above the power supply. A resistor of about 50 to 100Ω in series with the offending digital input will eliminate the problem.

Care should be taken not to overdrive the inputs of the ADC12191 with a device that is powered from supplies outside the range of the ADC12191 supply. Such practice may lead to conversion inaccuracies and even to device damage.

**Attempting to drive a high capacitance digital data bus.** Capacitive loading on the digital outputs causes instantaneous digital currents to flow from the $V_D$ I/O supply into the DGND I/O ground plane. These large charging current spikes can couple into the analog section, degrading dynamic performance. Adequate bypassing and maintaining separate analog and digital ground planes will reduce this problem. The digital data outputs should be buffered (with 74ACQ541, for example). Dynamic performance can also be improved by adding series resistors at each digital output, close to the ADC12191, reducing the energy coupled back into the converter output pins by limiting the output slew rate. A reasonable value for these resistors is 47Ω.

**Using an inadequate amplifier to drive the analog input.** The analog input circuits of the ADC12191 place a switched capacitor load on the input signal source. Therefore the amplifier used to drive the ADC12191 must have a low impedance output and adequate bandwidth to avoid distortion of the input signal.

**Operating with the reference pins outside of the specified range.** As mentioned in section 1.1, $V_{REF}$ should be in the range of $1.8V \leq V_{REF} \leq 2.2V$. Operating outside of these limits could lead to signal distortion.

**Using a clock source with excessive jitter, using excessively long clock signal trace, or having other signals coupled to the clock signal trace.** This will cause the sampling interval to vary, causing excessive output noise and a reduction in SNR performance.

## Physical Dimensions inches (millimeters) unless otherwise noted

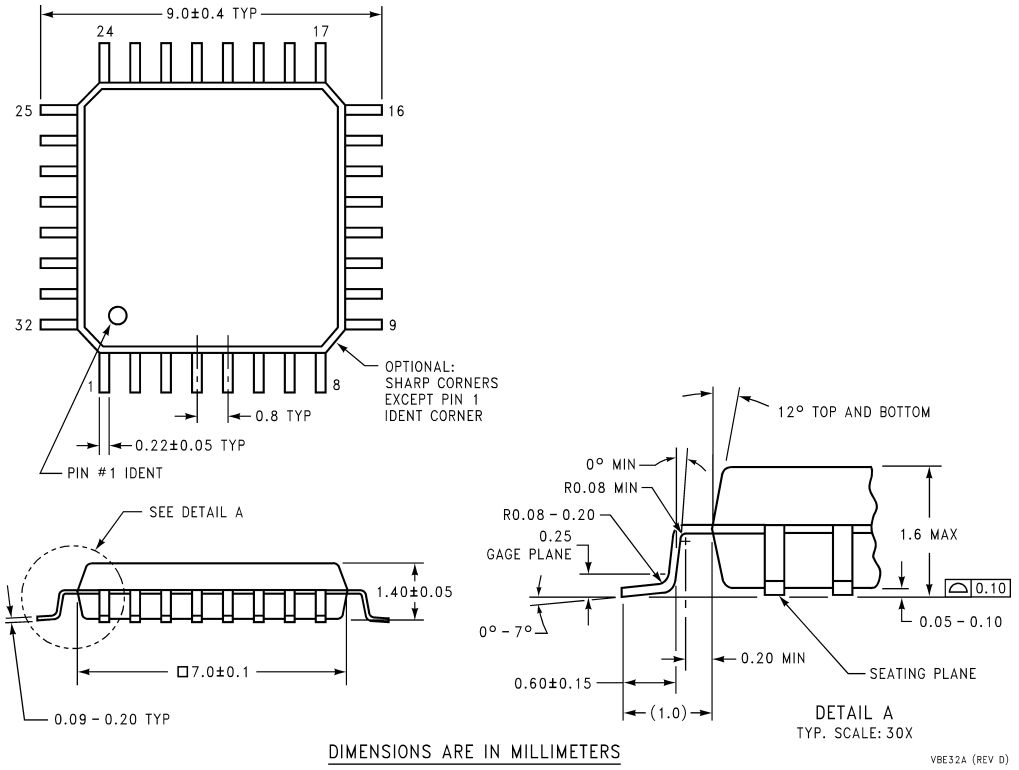


**32-Lead TQFP Package**
**Ordering Number ADC12191CIVT**
**NS Package Number VBE32A**

**LIFE SUPPORT POLICY**

NATIONAL'S PRODUCTS ARE NOT AUTHORIZED FOR USE AS CRITICAL COMPONENTS IN LIFE SUPPORT DEVICES OR SYSTEMS WITHOUT THE EXPRESS WRITTEN APPROVAL OF THE PRESIDENT OF NATIONAL SEMICONDUCTOR CORPORATION. As used herein:

1. Life support devices or systems are devices or systems which, (a) are intended for surgical implant into the body, or (b) support or sustain life, and whose failure to perform when properly used in accordance with instructions for use provided in the labeling, can be reasonably expected to result in a significant injury to the user.
2. A critical component is any component of a life support device or system whose failure to perform can be reasonably expected to cause the failure of the life support device or system, or to affect its safety or effectiveness.

**National Semiconductor Corporation**
Americas
Tel: 1-800-272-9959
Fax: 1-800-737-7018
Email: support@nsc.com

www.national.com

**National Semiconductor Europe**
Fax: +49 (0) 1 80-530 85 86
Email: europe.support@nsc.com
Deutsch Tel: +49 (0) 1 80-530 85 85
English Tel: +49 (0) 1 80-532 78 32
Français Tel: +49 (0) 1 80-532 93 58
Italiano Tel: +49 (0) 1 80-534 16 80

**National Semiconductor Asia Pacific Customer Response Group**
Tel: 65-2544466
Fax: 65-2504466
Email: sea.support@nsc.com

**National Semiconductor Japan Ltd.**
Tel: 81-3-5639-7560
Fax: 81-3-5639-7507

National does not assume any responsibility for use of any circuitry described, no circuit patent licenses are implied and National reserves the right at any time without notice to change said circuitry and specifications.