查询ADM3222供应商 捷多邦，专业PCB打样工厂，24小时加急出货

# Low Power, 3.3 V, RS-232 Line Drivers/Receivers

# ADM3202/ADM3222/ADM1385

## FEATURES

460 kbps Data Rate
Specified at 3.3 V
Meets EIA-232E Specifications
0.1 µF Charge Pump Capacitors
Low Power Shutdown (ADM3222E and ADM1385)
DIP, SO, SOIC, SSOP and TSSOP Package Options
Upgrade for MAX3222/32 and LTC1385

ESD Protection to IEC1000-4-2 (801.2)
on RS-232 Pins (ADM3202 Only)
±8 kV: Contact Discharge
±15 kV: Air-Gap Discharge

## APPLICATIONS

General Purpose RS-232 Data Link
Portable Instruments
Printers
Palmtop Computers
PDAs

## FUNCTIONAL BLOCK DIAGRAMS

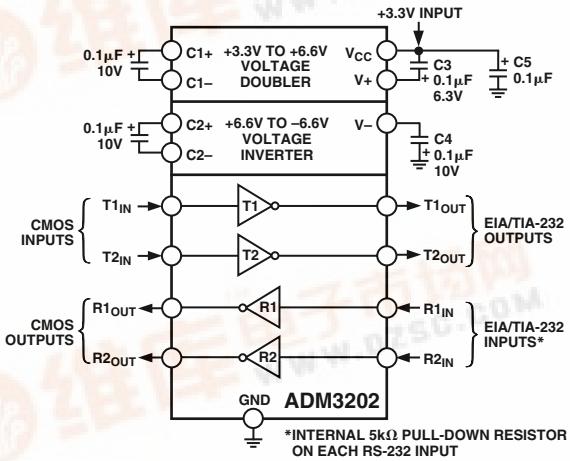


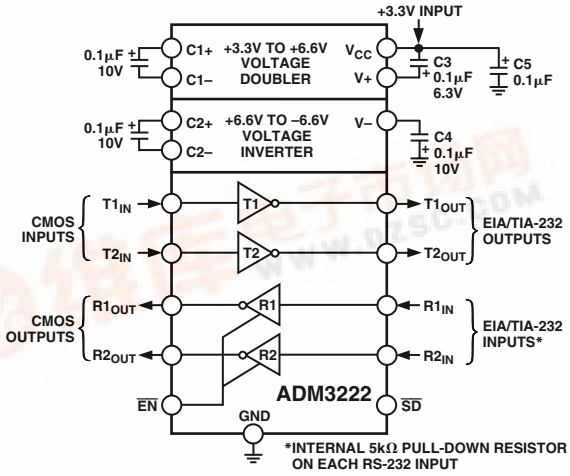


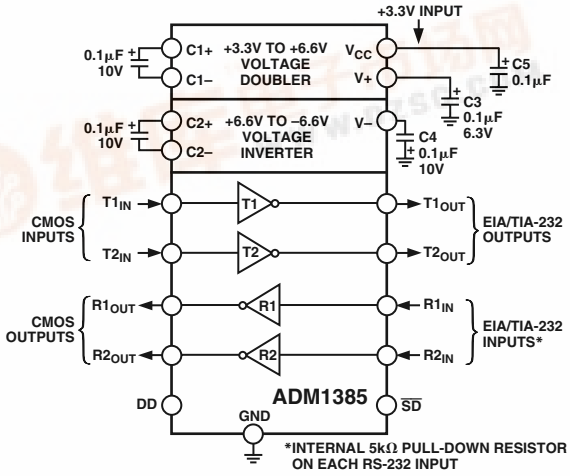


## GENERAL DESCRIPTION

The ADM3202/ADM3222/ADM1385 transceivers are high speed, 2-channel RS-232/V.28 interface devices which operate from a single 3.3 V power supply.

Low power consumption and a shutdown facility (ADM3222/ADM1385) makes them ideal for battery powered portable instruments.

The ADM3202/ADM3222/ADM1385 conforms to the EIA-232E and CCITT V.28 specifications and operates at data rates up to 460 kbps.

Four external 0.1 µF charge pump capacitors are used for the voltage doubler/inverter permitting operation from a single 3.3 V supply.

The ADM3222 contains additional enable and shutdown circuitry. The $\overline{EN}$ input may be used to three-state the receiver outputs. The $\overline{SD}$ input is used to power down the charge pump and transmitter outputs reducing the quiescent current to less than 0.5 µA. The receivers remain enabled during shutdown unless disabled using $\overline{EN}$.

The ADM1385 contains a driver disable mode and a complete shutdown mode.

The ADM3202 is available in a 16-lead DIP, narrow and wide SOIC as well as a space saving 16-lead TSSOP package. The ADM3222 is available in 18-lead DIP, SO and in 20-lead SSOP and TSSOP. The ADM1385 is available in a 20-lead SSOP package, which is pin compatible with the LTC1385 CG.

REV. B

Information furnished by Analog Devices is believed to be accurate and reliable. However, no responsibility is assumed by Analog Devices for its use, nor for any infringements of patents or other rights of third parties that may result from its use. No license is granted by implication or otherwise under any patent or patent rights of Analog Devices.

One Technology Way, P.O. Box 9106, Norwood, MA 02062-9106, U.S.A.
Tel: 781/329-4700 www.analog.com
Fax: 781/326-8703
© Analog Devices, Inc., 2001

# ADM3202/ADM3222/ADM1385—SPECIFICATIONS

**($V_{CC}$ = 3.3 V ± 0.3 V, C1–C4 = 0.1 μF. All specifications $T_{MIN}$ to $T_{MAX}$ unless otherwise noted.)**

| Parameter | Min | Typ | Max | Unit | Test Conditions/Comments |
|---|---|---|---|---|---|
| DC CHARACTERISTICS | | | | | |
| Operating Voltage Range | 3.0 | 3.3 | 5.5 | V | |
| $V_{CC}$ Power Supply Current | | 1.3 | 3 | mA | No Load |
| | | 8 | 12 | mA | $R_L$ = 3 kΩ to GND |
| Shutdown Supply Current | | 0.01 | 0.5 | μA | |
| LOGIC | | | | | |
| Input Logic Threshold Low, $V_{INL}$ | | | 0.8 | V | $T_{IN}$ |
| Input Logic Threshold High, $V_{INH}$ | 2.0 | | | V | $T_{IN}$ |
| CMOS Output Voltage Low, $V_{OL}$ | | | 0.4 | V | $I_{OUT}$ = 1.6 mA |
| CMOS Output Voltage High, $V_{OH}$ | $V_{CC}$ – 0.6 | | | V | $I_{OUT}$ = –1 mA |
| Logic Pull-Up Current | | 5 | 10 | μA | $T_{IN}$ = GND to $V_{CC}$* |
| Output Leakage Current | | | ±10 | μA | Receivers Disabled |
| RS-232 RECEIVER | | | | | |
| EIA-232 Input Voltage Range | –30 | | +30 | V | |
| EIA-232 Input Threshold Low | 0.6 | 1.2 | | V | |
| EIA-232 Input Threshold High | | 1.6 | 2.4 | V | |
| EIA-232 Input Hysteresis | | 0.4 | | V | |
| EIA-232 Input Resistance | 3 | 5 | 7 | kΩ | |
| RS-232 TRANSMITTER | | | | | |
| Output Voltage Swing (RS-232) | ±5.0 | ±5.2 | | V | $V_{CC}$ = 3.3 V. All Transmitter Outputs Loaded with 3 kΩ to Ground |
| Output Voltage Swing (RS-562) | ±3.7 | | | V | $V_{CC}$ = 3.0 V |
| Transmitter Output Resistance | 300 | | | Ω | $V_{CC}$ = 0 V, $V_{OUT}$ = ±2 V |
| RS-232 Output Short Circuit Current | | ±15 | | mA | |
| Output Leakage Current | | | ±25 | μA | SD = Low, $V_{OUT}$ = 12 V |
| TIMING CHARACTERISTICS | | | | | |
| Maximum Data Rate | 460 | | | kbps | $V_{CC}$ = 3.3 V, $R_L$ = 3 kΩ to 7 kΩ, $C_L$ = 50 pF to 1000 pF. One Tx Switching |
| Receiver Propagation Delay | | | | | |
| TPHL | | 0.4 | 1 | μs | |
| TPLH | | 0.4 | 1 | μs | |
| Transmitter Propagation Delay | | 300 | 1.2 | μs | $R_L$ = 3 kΩ, $C_L$ = 1000 pF |
| Receiver Output Enable Time | | 200 | | ns | |
| Receiver Output Disable Time | | 200 | | ns | |
| Transmitter Skew | | 30 | | ns | |
| Receiver Skew | | 300 | | ns | |
| Transition Region Slew Rate | | | | | Measured from +3 V to –3 V or –3 V to +3 V, $V_{CC}$ = +3.3 V |
| | 5.5 | 10 | 30 | V/μs | $R_L$ = 3 kΩ, $C_L$ = 1000 pF, $T_A$ = 25°C |

*ADM1385: Input leakage current typically –10 μA when $T_{IN}$ = GND.

Specifications subject to change without notice.

## ABSOLUTE MAXIMUM RATINGS*

($T_A$ = 25°C unless otherwise noted)

$V_{CC}$ . . . . . –0.3 V to +6 V
V+ . . . . . ($V_{CC}$ – 0.3 V) to +14 V
V– . . . . . +0.3 V to –14 V
Input Voltages
  $T_{IN}$ . . . . . –0.3 V to (V+, +0.3 V)
  $R_{IN}$ . . . . . ±30 V
Output Voltages
  $T_{OUT}$ . . . . . ±15 V
  $R_{OUT}$ . . . . . –0.3 V to ($V_{CC}$ + 0.3 V)
Short Circuit Duration
  $T_{OUT}$ . . . . . Continuous
Power Dissipation
  Power Dissipation N-16 . . . . . 450 mW
    (Derate 6 mW/°C above 50°C)
    $\theta_{JA}$, Thermal Impedance . . . . . 117°C/W
  Power Dissipation R-16 . . . . . 450 mW
    (Derate 6 mW/°C above 50°C)
    $\theta_{JA}$, Thermal Impedance . . . . . 158°C/W
  Power Dissipation RU-16 . . . . . 500 mW
    (Derate 6 mW/°C above 50°C)
    $\theta_{JA}$, Thermal Impedance . . . . . 158°C/W
  Power Dissipation R-18 . . . . . 450 mW
    (Derate 6 mW/°C above 50°C)
    $\theta_{JA}$, Thermal Impedance . . . . . 158°C/W
  Power Dissipation RS-20 . . . . . 450 mW
    (Derate 6 mW/°C above 50°C)
    $\theta_{JA}$, Thermal Impedance . . . . . 158°C/W
  Power Dissipation RU-20 . . . . . 450 mW
    (Derate 6 mW/°C above 50°C)
    $\theta_{JA}$, Thermal Impedance . . . . . 158°C/W
Operating Temperature Range
  Industrial (A Version) . . . . . –40°C to +85°C
Storage Temperature Range . . . . . –65°C to +150°C
Lead Temperature (Soldering, 10 sec) . . . . . 300°C

*This is a stress rating only; functional operation of the device at these or any other conditions above those indicated in the operation sections of this specification is not implied. Exposure to absolute maximum rating conditions for extended periods of time may affect reliability.

## ORDERING GUIDE

| Model | Temperature Range | Package Options* |
|---|---|---|
| ADM3202AN | –40°C to +85°C | N-16 |
| ADM3202ARN | –40°C to +85°C | R-16A |
| ADM3202ARW | –40°C to +85°C | R-16 |
| ADM3202ARU | –40°C to +85°C | RU-16 |
| ADM3222AN | –40°C to +85°C | N-18 |
| ADM3222ARW | –40°C to +85°C | R-18 |
| ADM3222ARS | –40°C to +85°C | RS-20 |
| ADM3222ARU | –40°C to +85°C | RU-20 |
| ADM1385ARS | –40°C to +85°C | RS-20 |

*N = Plastic DIP; R = Small Outline; RS = Shrink Small Outline; RU = Thin Shrink Small Outline.

## PIN FUNCTION DESCRIPTIONS

| Mnemonic | Function |
|---|---|
| $V_{CC}$ | Power Supply Input: 3.3 V ± 0.3 V. |
| V+ | Internally Generated Positive Supply (+6 V Nominal). |
| V– | Internally Generated Negative Supply (–6 V Nominal). |
| GND | Ground Pin. Must be connected to 0 V. |
| C1+, C1– | External Capacitor 1 is connected between these pins. 0.1 µF capacitor is recommended but larger capacitors up to 47 µF may be used. |
| C2+, C2– | External Capacitor 2 is connected between these pins. 0.1 µF capacitor is recommended but larger capacitors up to 47 µF may be used. |
| $Tx_{IN}$ | Transmitter (Driver) Inputs. These inputs accept TTL/CMOS levels. |
| $Tx_{OUT}$ | Transmitter (Driver) Outputs. These are RS-232 signal levels (typically ±9 V). |
| $Rx_{IN}$ | Receiver Inputs. These inputs accept RS-232 signal levels. An internal 5 kΩ pull-down resistor to GND is connected on each input. |
| $Rx_{OUT}$ | Receiver Outputs. These are CMOS output logic levels. |
| $\overline{EN}$ | (ADM3222) Receiver Enable, Active Low. When low, the receiver outputs are enabled. When high, they are three-stated. |
| $\overline{SD}$ | (ADM3222) Shutdown Control. Active Low. When low, the charge pump is shut down and the transmitter outputs are disabled. |
| $\overline{SD}$ | (ADM1385) Shutdown Control. When low, the charge pump is shut down and all transmitters and receivers are disabled. |
| DD | (ADM1385) Driver Disable. When low, the charge pump is turned off and the transmitters are disabled. The receivers remain active. |

## PIN CONNECTIONS DIP (N, R Packages)

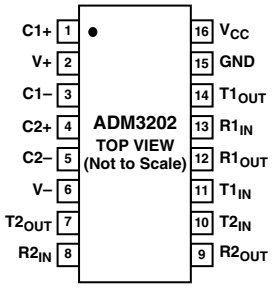


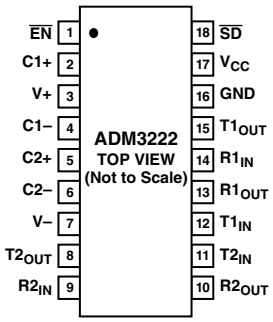


## PIN CONNECTIONS DIP (RS, RU Packages)

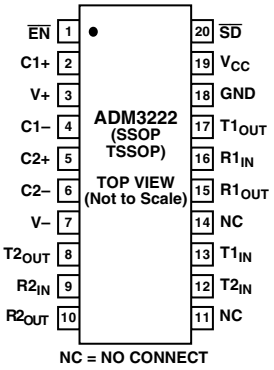


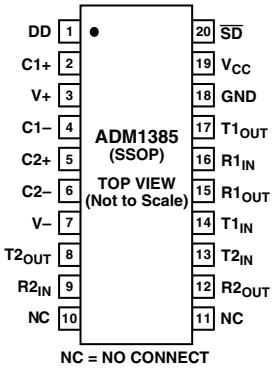

# Typical Performance Characteristics–ADM3202/ADM3222/ADM1385

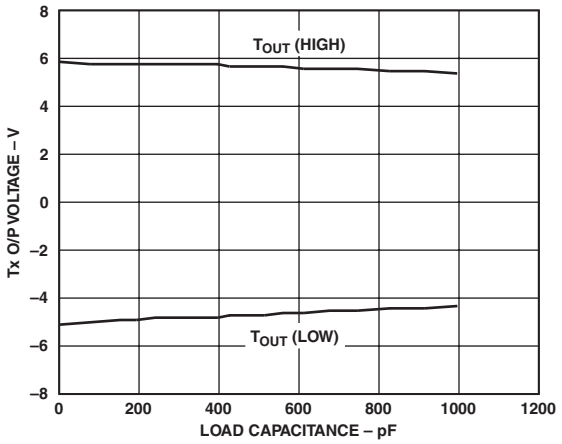


*TPC 1. Transmitter Output Voltage High/Low vs. Load Capacitance @ 460 kbps*

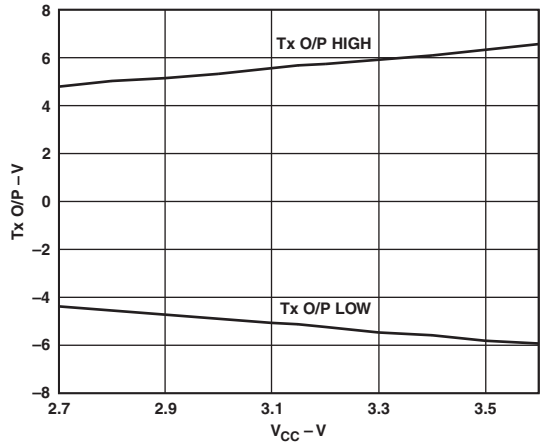


*TPC 2. Transmitter Output Voltage vs. $V_{CC}$*

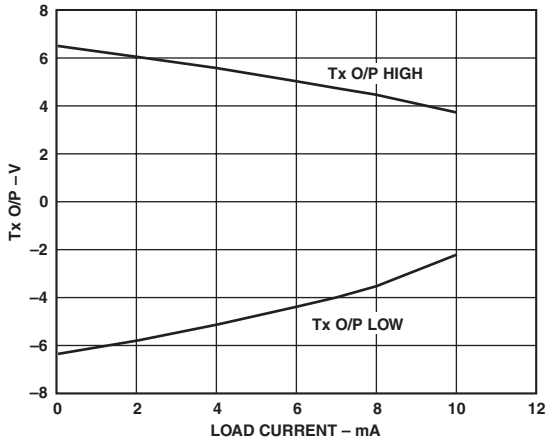


*TPC 3. Transmitter Output Voltage Low/High vs. Load Current*

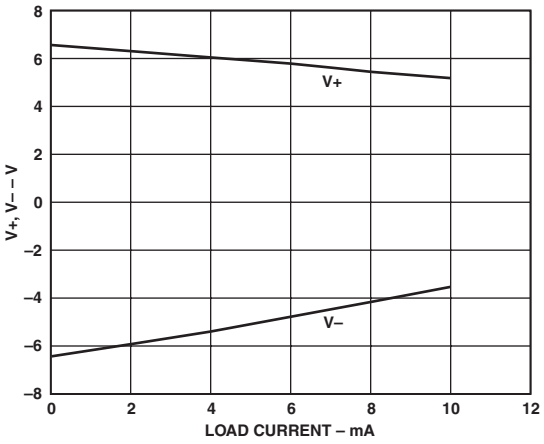


*TPC 4. Charge Pump V+, V– vs. Load Current*

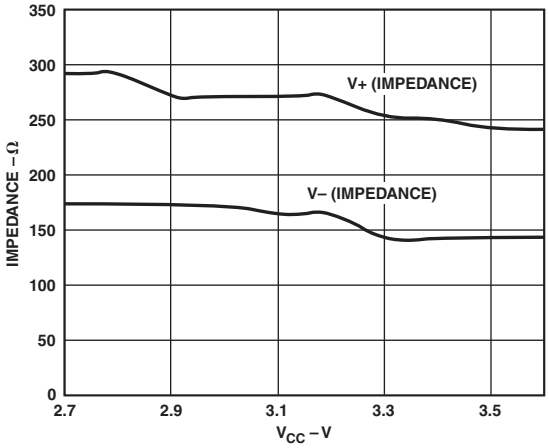


*TPC 5. Charge Pump Impedance vs. $V_{CC}$*

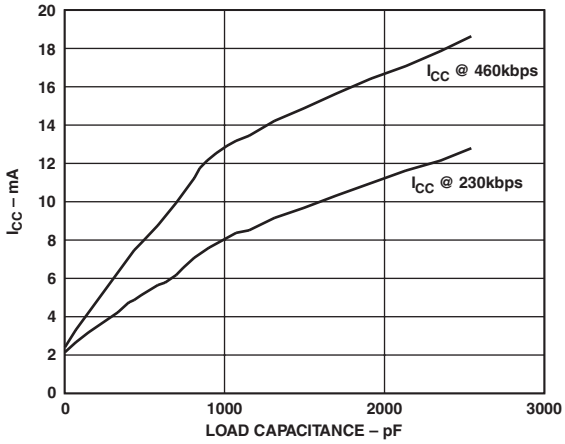


*TPC 6. Power Supply Current vs. Load Capacitance*

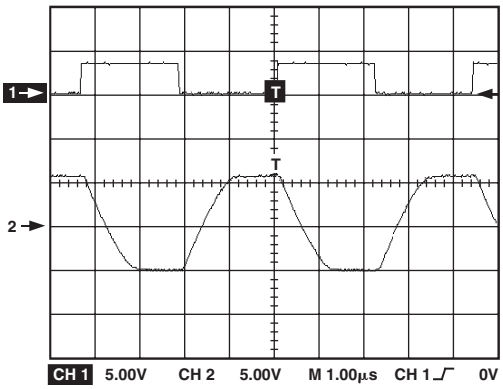


*TPC 7. 460 kbps Data Transmission*

## GENERAL DESCRIPTION

The ADM3202/ADM3222/ADM1385 are RS-232 line drivers/receivers. Step-up voltage converters coupled with level shifting transmitters and receivers allow RS-232 levels to be developed while operating from a single 3.3 V supply.

CMOS technology is used to keep the power dissipation to an absolute minimum, allowing maximum battery life in portable applications.

The ADM3202/ADM3222/ADM1385 is a modification, enhancement and improvement to the AD230–AD241 family and its derivatives. It is essentially plug-in compatible and does not have materially different applications.

## CIRCUIT DESCRIPTION

The internal circuitry consists of three main sections. These are:

1. A charge pump voltage converter
2. 3.3 V logic to EIA-232 transmitters
3. EIA-232 to 5 V logic receivers.

### Charge Pump DC-DC Voltage Converter

The charge pump voltage converter consists of a 200 kHz oscillator and a switching matrix. The converter generates a ±6.6 V supply from the input 3.3 V level. This is done in two stages using a switched capacitor technique as illustrated below. First, the 3.3 V input supply is doubled to 6.6 V using capacitor C1 as the charge storage element. The +6.6 V level is then inverted to generate –6.6 V using C2 as the storage element. C3 is shown connected between V+ and $V_{CC}$, but is equally effective if connected between V+ and GND.

Capacitors C3 and C4 are used to reduce the output ripple. Their values are not critical and can be increased if desired. Capacitor C3 is shown connected between V+ and $V_{CC}$. It is also acceptable to connect this capacitor between V+ and GND.

If desired, larger capacitors (up to 10 µF) can be used for capacitors C1–C4.

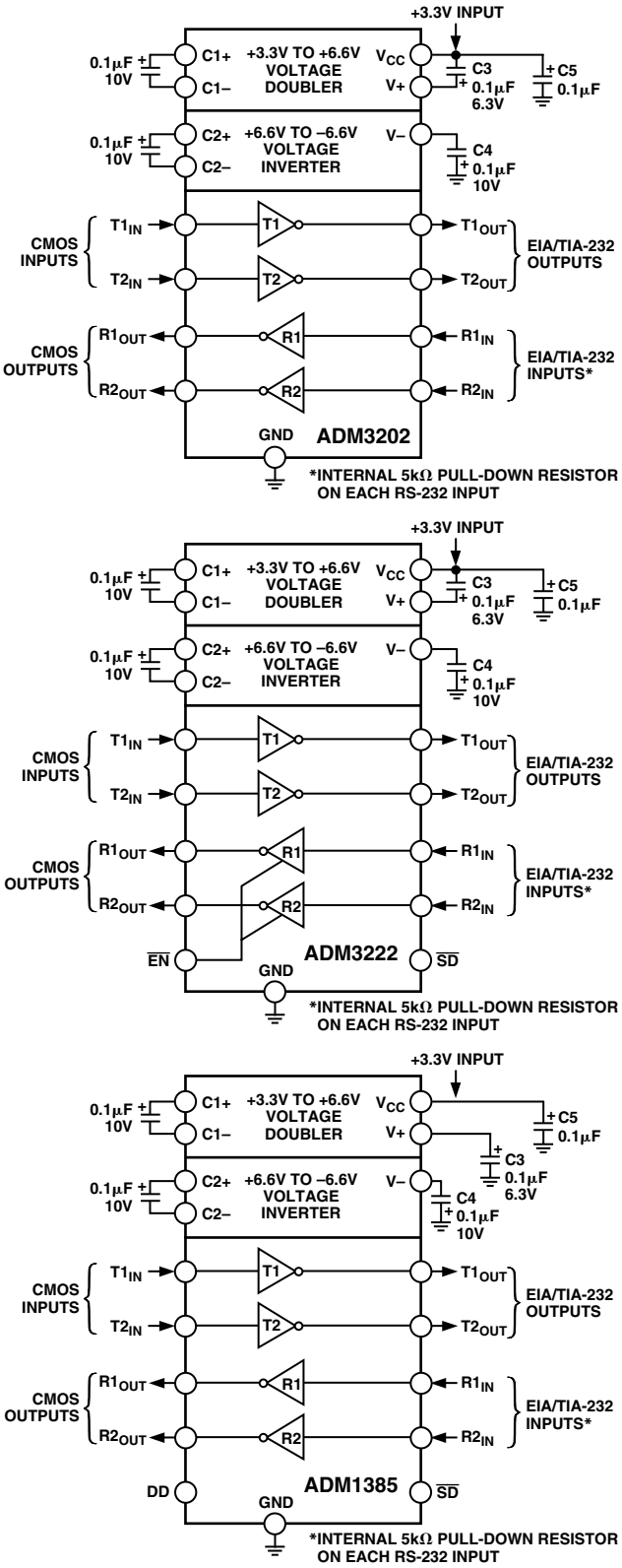


*Figure 1. Typical Operating Circuits*

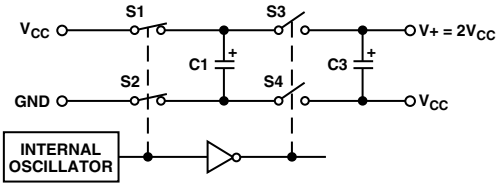


*Figure 2. Charge Pump Voltage Doubler*

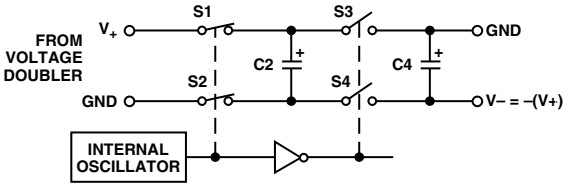


*Figure 3. Charge Pump Voltage Inverter*

**Transmitter (Driver) Section**

The drivers convert 3.3 V logic input levels into RS-232 output levels. With $V_{CC}$ = 3.3 V and driving an RS-232 load, the output voltage swing is typically ±6 V.

**Receiver Section**

The receivers are inverting level-shifters that accept RS-232 input levels and translate them into 3 V logic output levels. The inputs have internal 5 kΩ pull-down resistors to ground and are also protected against overvoltages of up to ±30 V. Unconnected inputs are pulled to 0 V by the internal 5 kΩ pull-down resistor. This, therefore, results in a Logic 1 output level for unconnected inputs or for inputs connected to GND.

The receivers have Schmitt trigger inputs with a hysteresis level of 0.4 V. This ensures error-free reception for both noisy inputs and for inputs with slow transition times.

**HIGH BAUD RATE**

The ADM3202E/ADM3222E feature high slew rates permitting data transmission at rates well in excess of the EIA/RS-232E specifications. RS-232 voltage levels are maintained at data rates up to 460 kbps even under worst case loading conditions. This allows for high speed data links between two terminals or indeed it is suitable for the new generation $I_{SDN}$ modem standards which requires data rates of 230 kbps. The slew rate is internally controlled to less than 30 V/µs in order to minimize EMI interference.

## OUTLINE DIMENSIONS

Dimensions shown in inches and (mm).

**16-Lead Plastic DIP (N-16)**

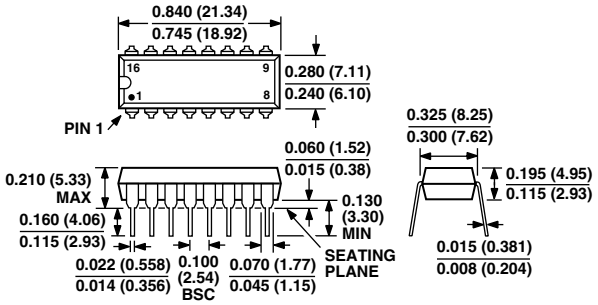


**16-Lead Narrow Body SOIC (R-16A)**

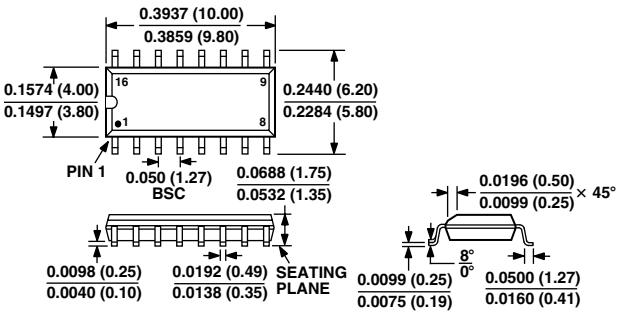


**16-Lead Thin Shrink Small Outline (TSSOP) (RU-16)**

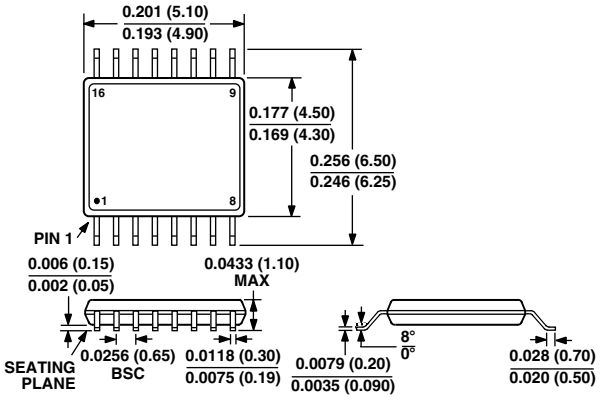


**16-Lead Wide Body SOIC (R-16)**

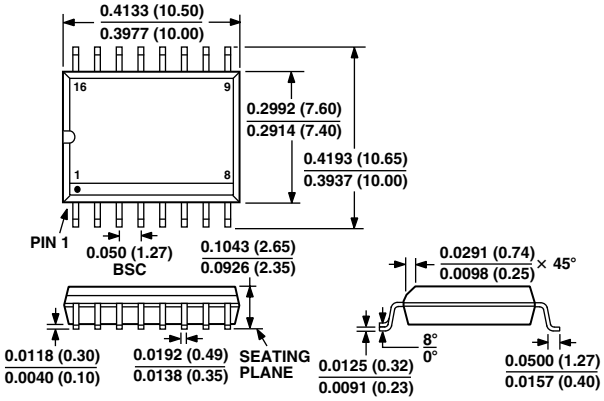

**18-Lead Plastic DIP**
**(N-18)**

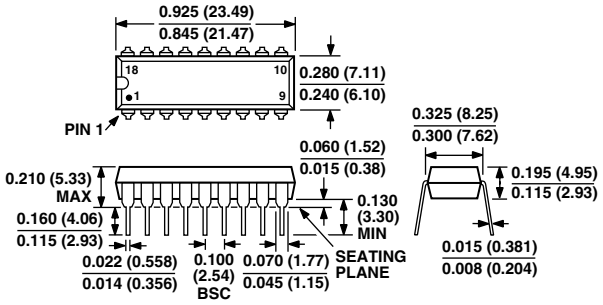


**18-Lead Wide Body SOIC**
**(R-18)**

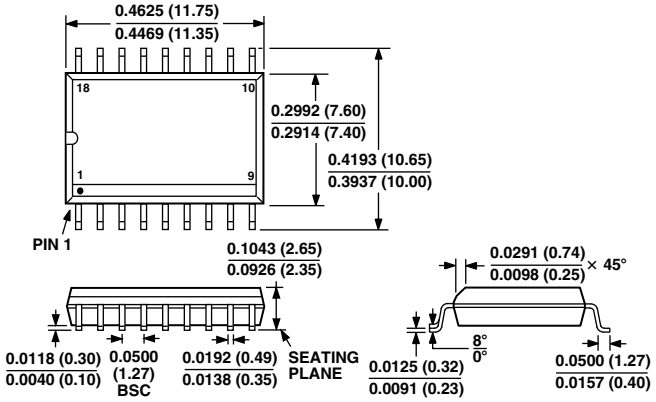


**20-Lead Thin Shrink Small Outline (TSSOP)**
**(RU-20)**

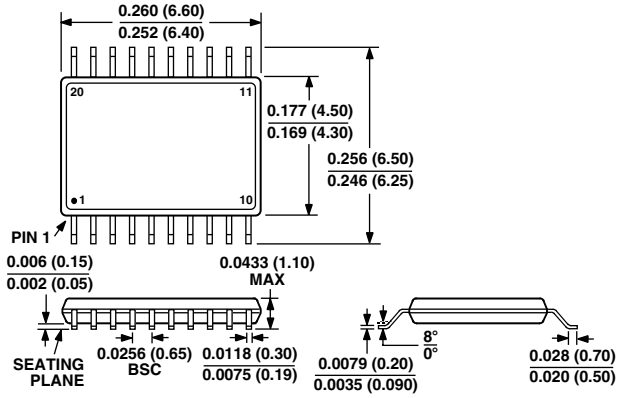


**20-Lead Shrink Small Outline (SSOP)**
**(RS-20)**

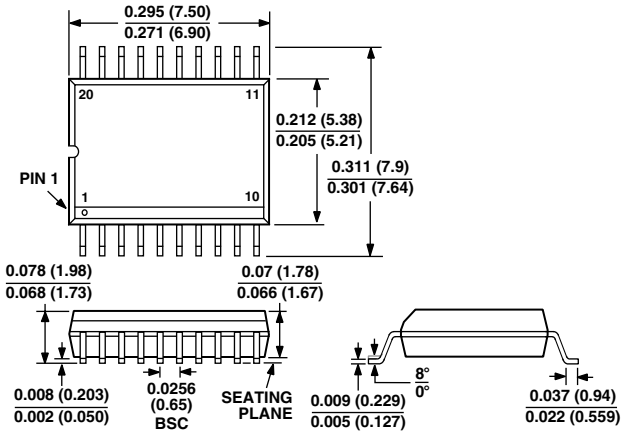


# Revision History

| Location | Page |
|---|---|
| **11/01—Data Sheet changed from REV. A to REV. B.** | |
| Changes to Specifications page | 2 |

C00071–0–12/01(B)

PRINTED IN U.S.A.