查询LT1776供应商
捷多邦，专业PCB打样工厂，24小时加急出货

INITIAL RELEASE
Final Electrical Specifications
LT1776

Wide Input Range, High Efficiency, Step-Down Switching Regulator

September 1998

FEATURES

- **Wide Input Range: 7.4V to 60V**
- 700mA Peak Switch Rating
- **Adaptive Switch Drive Maintains Efficiency at High Load Without Pulse Skipping at Light Load**
- True Current Mode Control
- 200kHz Fixed Operating Frequency
- Synchronizable to 400kHz
- Low Supply Current in Shutdown: 30µA
- Available in 8-Pin SO and PDIP Packages

APPLICATIONS

- Automotive DC/DC Converters
- Cellular Phone Battery Charger Accessories
- IEEE 1394 Step-Down Converters

DESCRIPTION

The LT®1776 is a wide input range, high efficiency Buck (step-down) switching regulator. The monolithic die includes all oscillator, control and protection circuitry. The part can accept input voltages as high as 60V and contains an output switch rated at 700mA peak current. Current mode control delivers excellent dynamic input supply rejection and short-circuit protection.

The LT1776 contains several features to enhance efficiency. The internal control circuitry is normally powered via the V_{CC} pin, thereby minimizing power drawn directly from the V_{IN} supply (see Applications Information). The action of the LT1776 switch circuitry is also load dependent. At medium to high loads, the output switch circuitry maintains fast rise time for good efficiency. At light loads, rise time is deliberately reduced to avoid pulse skipping behavior.

The available SO-8 package and 200kHz switching frequency allow for minimal PC board area requirements.

LT, LTC and LT are registered trademarks of Linear Technology Corporation.

TYPICAL APPLICATION

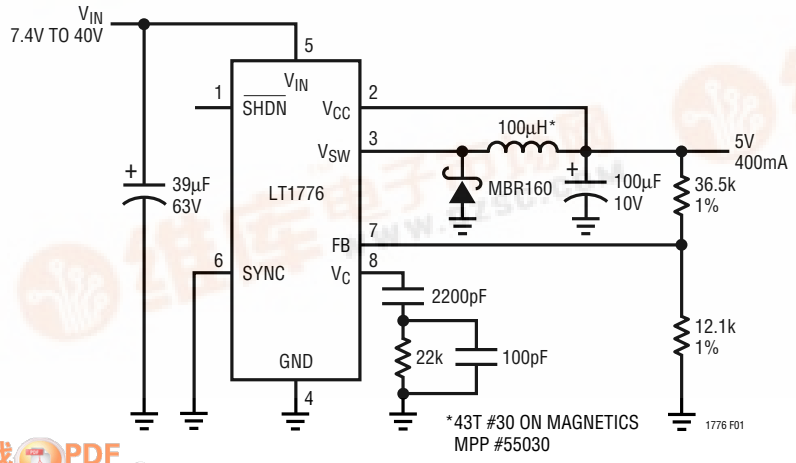

Figure 1

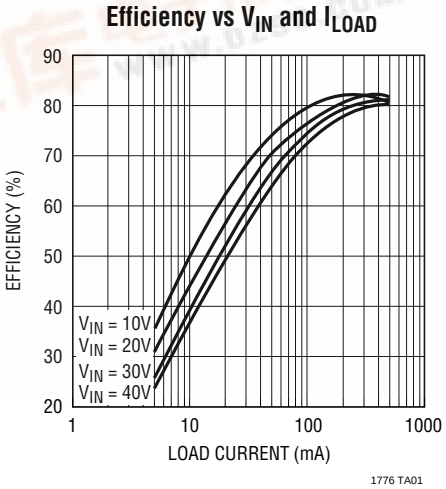

找PDF 维库一下 pdf.dzsc.com

ABSOLUTE MAXIMUM RATINGS

(Note 1)

Supply Voltage (Note 5) 60V
Switch Voltage (Note 5) 60V
$\overline{SHDN}$, SYNC Pin Voltage 7V
V_{CC} Pin Voltage 30V
FB Pin Voltage 3.5V
Operating Junction Temperature Range
LT1776C ..... 0°C to 125°C
LT1776I ..... –40°C to 125°C
Storage Temperature Range ..... –65°C to 150°C
Lead Temperature (Soldering, 10 sec) ..... 300°C

PACKAGE/ORDER INFORMATION

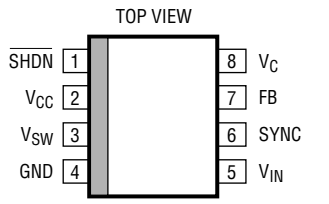

N8 PACKAGE 8-LEAD PDIP
S8 PACKAGE 8-LEAD PLASTIC SO

T_{JMAX} = 145°C, θ_{JA} = 130°C/W (N8)
T_{JMAX} = 145°C, θ_{JA} = 110°C/W (S8)

ORDER PART NUMBER
LT1776CN8 LT1776CS8 LT1776IN8 LT1776IS8
S8 PART MARKING
1776 1776I

Consult factory for Military grade parts.

ELECTRICAL CHARACTERISTICS

V_{IN} = 40V, V_{SW} open, V_{CC} = 5V, V_C = 1.4V, T_A = 25°C unless otherwise noted.

SYMBOL	PARAMETER	CONDITIONS		MIN	TYP	MAX	UNITS
Power Supplies							
$V_{IN(MIN)}$	Minimum Input Voltage				6.7	7.0	V
			●			7.4	V
	Thermally Limited Continuous Operating Voltage		●		40		V
I_{VIN}	V_{IN} Supply Current	V_C = 0V			620	800	µA
			●			900	µA
I_{VCC}	V_{CC} Supply Current	V_C = 0V			3.2	4.0	mA
			●			5.0	mA
V_{VCC}	V_{CC} Dropout Voltage	(Note 2)			2.8	3.1	V
	Shutdown Mode I_{VIN}	$V_{\overline{SHDN}}$ = 0V			30	50	µA
			●			75	µA
Feedback Amplifier							
V_{REF}	Reference Voltage			1.225	1.240	1.255	V
			●	1.215		1.265	V
I_{IN}	FB Pin Input Bias Current				600	1500	nA
g_m	Feedback Amplifier Transconductance	$\Delta Ic = \pm 10\mu A$		400	650	1000	µmho
			●	200		1500	µmho
I_{SRC}, I_{SNK}	Feedback Amplifier Source or Sink Current			60	100	170	µA
			●	45		220	µA
V_{CL}	Feedback Amplifier Clamp Voltage				2.0		V
	Reference Voltage Line Regulation	$12V \le V_{IN} \le 60V$	●			0.01	%/V
	Voltage Gain			200	600		V/V
Output Switch							
V_{ON}	Output Switch On Voltage	I_{SW} = 0.5A			1.0	1.5	V
I_{LIM}	Switch Current Limit	(Note 3)	●	0.55	0.70	1.0	A
Current Amplifier							
	Control Pin Threshold	Duty Cycle = 0%		0.9	1.1	1.25	V
	Control Voltage to Switch Transconductance				2		A/V

ELECTRICAL CHARACTERISTICS

V_{IN} = 40V, V_{SW} open, V_{CC} = 5V, V_C = 1.4V, T_A = 25°C unless otherwise noted.

SYMBOL	PARAMETER	CONDITIONS		MIN	TYP	MAX	UNITS
Timing							
f	Switching Frequency			180	200	220	kHz
			●	170		230	kHz
	Maximum Switch Duty Cycle		●	85	90		%
$t_{ON(MIN)}$	Minimum Switch On Time	High dV/dt Mode, R_L = 39Ω (Note 4)			300		ns
Boost Operation							
	V_C Pin Boost Threshold				1.35		V
	dV/dt Below Threshold				0.2		V/ns
	dV/dt Above Threshold				1.6		V/ns
Sync Function							
	Minimum Sync Amplitude		●		1.5	2.2	V
	Synchronization Range	(Note 6)	●	250		400	kHz
	SYNC Pin Input R				40		kΩ
$\overline{SHDN}$ Pin Function							
$V_{\overline{SHDN}}$	Shutdown Mode Threshold		●	0.1	0.30	0.65	V
	Upper Lockout Threshold	Switching Action On			1.260		V
	Lower Lockout Threshold	Switching Action Off			1.245		V
$I_{\overline{SHDN}}$	Shutdown Pin Current	$V_{\overline{SHDN}}$ = 0V			12	20	μA
		$V_{\overline{SHDN}}$ = 1.25V			2.5	10	μA

The ● denotes specifications which apply over the full operating temperature range.

Note 1: Absolute Maximum Ratings are those values beyond which the life of a device may be impaired.

Note 2: Control circuitry powered from V_{CC}.

Note 3: Switch current limit is DC trimmed and tested in production. Inductor dI/dt rate will cause a somewhat higher current limit in actual application.

Note 4: Minimum switch on time is production tested with a 39Ω resistive load to ground.

Note 5: Parts are guaranteed to survive 60V on V_{IN} and V_{SW}. However, thermal constraints will limit V_{IN} in some applications, depending primarily on maximum output current and switching frequency. See Applications section for more information.

Note 6: Internal oscillator is guaranteed to sync up to 400kHz. However, thermal constraints and/or controllability issues may place a lower limit on switching frequency in actual usage. See Applications section for more information.

PIN FUNCTIONS

$\overline{SHDN}$ (Pin 1): When pulled below the shutdown mode threshold, nominally 0.30V, this pin turns off the regulator and reduces V_{IN} input current to a few tens of microamperes (shutdown mode).

When this pin is held above the shutdown mode threshold, but below the lockout threshold, the part will be operational with the exception that output switching action will be inhibited (lockout mode). A user-adjustable undervoltage lockout can be implemented by driving this pin from an external resistor divider to V_{IN}. This action is logically "ANDed" with the internal UVLO, set at nominally 6.7V, such that minimum V_{IN} can be increased above 6.7V, but not decreased (see Applications Information).

If unused, this pin should be left open. However, the high impedance nature of this pin renders it susceptible to coupling from the high speed V_{SW} node, so a small capacitor to ground, typically 100pF or so is recommended when the pin is left "open".

V_{CC} (Pin 2): This pin is used to power the internal control circuitry off of the switching supply output. Proper use of this pin enhances overall power supply efficiency. During

PIN FUNCTIONS

start-up conditions, internal control circuitry is powered directly from V_{IN}.

If the output capacitor is located more than one inch from the V_{CC} pin, a separate 0.1µF bypass capacitor to ground may be required right at the pin.

V_{SW} (Pin 3): This is the emitter node of the output switch and has large currents flowing through it. This node moves at a high dV/dt rate, especially when in "boost" mode. Keep the traces to the switching components as short as possible to minimize electromagnetic radiation and voltage spikes.

GND (Pin 4): This is the device ground pin. The internal reference and feedback amplifier are referred to it. Keep the ground path connection to the FB divider and the V_C compensation capacitor free of large ground currents.

V_{IN} (Pin 5): This is the high voltage supply pin for the output switch. It also supplies power to the internal control circuitry during start-up conditions or if the V_{CC} pin is left open. A high quality bypass capacitor which meets the input ripple current requirements is needed here. (See Applications Information).

SYNC (Pin 6): Pin used to synchronize internal oscillator to the external frequency reference. It is directly logic compatible and can be driven with any signal between 10% and 90% duty cycle. The sync function is internally disabled if the FB pin voltage is low enough to cause oscillator slowdown. If unused, this pin should be grounded.

FB (Pin 7): This is the inverting input to the feedback amplifier. The noninverting input of this amplifier is internally tied to the 1.24V reference. This pin also slows down the frequency of the internal oscillator when its voltage is abnormally low, e.g., 2/3 of normal or less. This feature helps maintain proper short-circuit protection.

V_C (Pin 8): This is the control voltage pin which is the output of the feedback amplifier and the input of the current comparator. Frequency compensation of the overall loop is effected by placing a capacitor, (or in most cases a series RC combination) between this node and ground.

BLOCK DIAGRAM

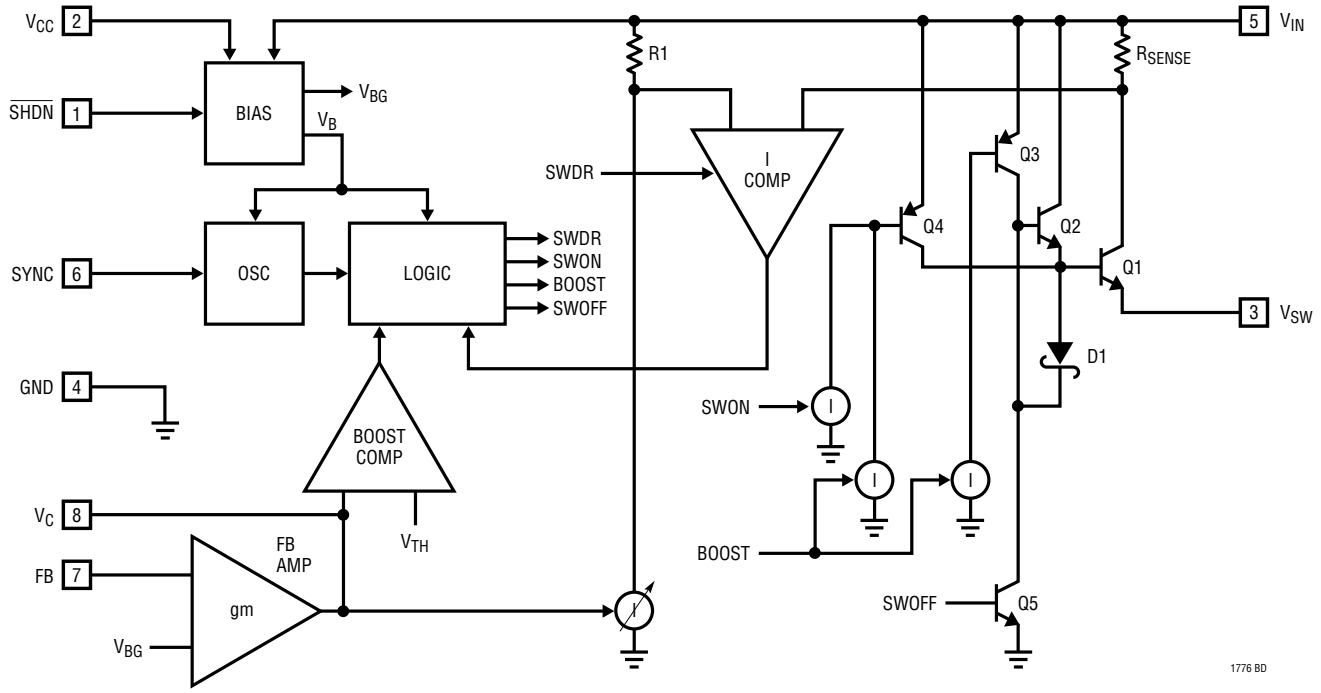

TIMING DIAGRAMS

High dV/dt Mode

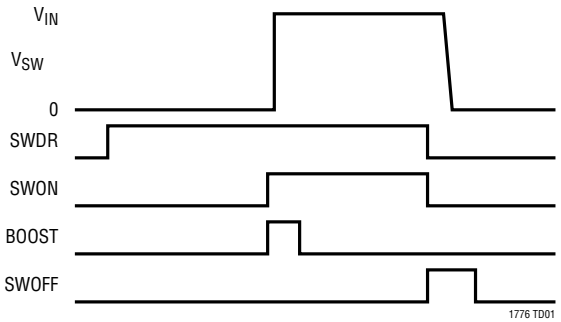

Low dV/dt Mode

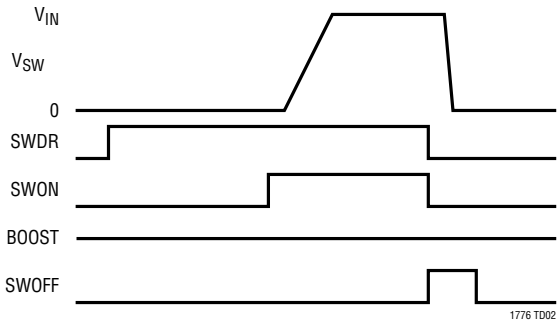

OPERATION

The LT1776 is a current mode switching regulator IC that has been optimized for high efficiency operation in high input voltage, low output voltage buck topologies. The Block Diagram shows an overall view of the system. Several of the blocks are straightforward and similar to those found in traditional designs, including: Internal Bias Regulator, Oscillator and Feedback Amplifier. The novel portion includes an elaborate Output Switch section and Logic Section to provide the control signals required by the switch section.

The LT1776 operates much the same as traditional current mode switchers, the major difference being its specialized output switch section. Due to space constraints, this discussion will not reiterate the basics of current mode switcher/controllers and the "buck" topology. A good source of information on these topics is Application Note 19.

Output Switch Theory

One of the classic problems in delivering low output voltage from high input voltage at good efficiency is that minimizing AC switching losses requires very fast voltage (dV/dt) and current (dI/dt) transition at the output device. This is in spite of the fact that in a bipolar implementation, slow lateral PNPs must be included in the switching signal path.

Fast positive-going slew rate action is provided by lateral PNP Q3 driving the Darlington arrangement of Q1 and Q2. The extra β available from Q2 greatly reduces the drive requirements of Q3.

Although desirable for dynamic reasons, this topology alone will yield a large DC forward voltage drop. A second lateral PNP, Q4, acts directly on the base of Q1 to reduce the voltage drop after the slewing phase has taken place. To achieve the desired high slew rate, PNPs Q3 and Q4 are "force-fed" packets of charge via the current sources controlled by the boost signal.

Please refer to the High dV/dt Mode Timing Diagram. A typical oscillator cycle is as follows: The logic section first generates an SWDR signal that powers up the current comparator and allows it time to settle. About 1μs later, the SWON signal is asserted and the BOOST signal is pulsed for a few hundred nanoseconds. After a short delay, the V_{SW} pin slews rapidly to V_{IN}. Later, after the peak switch current indicated by the control voltage V_C has been reached (current mode control), the SWON and SWDR signals are turned off, and SWOFF is pulsed for several hundred nanoseconds. The use of an explicit turn-off device, i.e., Q5, improves turn-off response time and thus aids both controllability and efficiency.

The system as previously described handles heavy loads (continuous mode) at good efficiency, but it is actually counterproductive for light loads. The method of jamming charge into the PNP bases makes it difficult to turn them off rapidly and achieve the very short switch ON times required by light loads in discontinuous mode.

OPERATION

Furthermore, the high leading edge dV/dt rate similarly adversely affects light load controllability.

The solution is to employ a "boost comparator" whose inputs are the V_C control voltage and a fixed internal threshold reference, V_{TH}. (Remember that in a current mode switching topology, the V_C voltage determines the peak switch current.) When the V_C signal is above V_{TH}, the previously described "high dV/dt" action is performed. When the V_C signal is below V_{TH}, the boost pulses are absent, as can be seen in the Low dV/dt Mode Timing Diagram. Now the DC current, activated by the SWON signal alone, drives Q4 and this transistor drives Q1 by itself. The absence of a boost pulse, plus the lack of a second NPN driver, result in a much lower slew rate which aids light load controllability.

A further aid to overall efficiency is provided by the specialized bias regulator circuit, which has a pair of inputs, V_{IN} and V_{CC}. The V_{CC} pin is normally connected to the switching supply output. During start-up conditions, the LT1776 powers itself directly from V_{IN}. However, after the switching supply output voltage reaches about 2.9V, the bias regulator uses this supply as its input. Previous generation buck controller ICs without this provision typically required hundreds of milliwatts of quiescent power when operating at high input voltage. This both degraded efficiency and limited available output current due to internal heating.

APPLICATIONS INFORMATION

Selecting a Power Inductor

There are several parameters to consider when selecting a power inductor. These include inductance value, peak current rating (to avoid core saturation), DC resistance, construction type, physical size, and of course, cost.

In a typical application, proper inductance value is dictated by matching the discontinuous/continuous crossover point with the LT1776 internal low-to-high dV/dt threshold. This is the best compromise between maintaining control with light loads while maintaining good efficiency with heavy loads. The fixed internal dV/dt threshold has a nominal value of 1.4V, which referred to the V_C pin threshold and control voltage to switch transconductance, corresponds to a peak current of about 200mA. Standard buck converter theory yields the following expression for inductance at the discontinuous/continuous crossover:

$$L = \left(\frac{V_{OUT}}{f \bullet I_{PK}}\right)\left(\frac{V_{IN} - V_{OUT}}{V_{IN}}\right)$$

For example, substituting 40V, 5V, 200mA and 200kHz respectively for V_{IN}, V_{OUT}, I_{PK} and f yields a value of about 100µH. Note that the left half of this expression is independent of input voltage while the right half is only a weak function of V_{IN} when V_{IN} is much greater than V_{OUT}. This means that a single inductor value will work well over a range of "high" input voltage. And although a progressively smaller inductor is suggested as V_{IN} begins to approach V_{OUT}, note that the much higher ON duty cycles under these conditions are much more forgiving with respect to controllability and efficiency issues. Therefore when a wide input voltage range must be accommodated, say 10V to 40V for $5V_{OUT}$, the user should choose an inductance value based on the maximum input voltage.

Once the inductance value is decided, inductor peak current rating and resistance need to be considered. Here, the inductor peak current rating refers to the onset of saturation in the core material, although manufacturers sometimes specify a "peak current rating" which is derived from a worst-case combination of core saturation and self-heating effects. Inductor winding resistance alone limits the inductor's current carrying capability as the I^2R power threatens to overheat the inductor. If applicable, remember to include the condition of output short circuit. Although the peak current rating of the inductor can be exceeded in short-circuit operation, as core saturation per se is not destructive to the core, excess resistive self-heating is still a potential problem.

APPLICATIONS INFORMATION

The final inductor selection is generally based on cost, which usually translates into choosing the smallest physical size part that meets the desired inductance value, resistance and current carrying capability. An additional factor to consider is that of physical construction. Briefly stated, "open" inductors built on a rod- or barrel-shaped core generally offer the smallest physical size and lowest cost. However their open construction does not contain the resulting magnetic field, and they may not be acceptable in RFI-sensitive applications. Toroidal style inductors, many available in surface mount configuration, offer improved RFI performance, generally at an increase in cost and physical size. And although custom design is always a possibility, most potential LT1776 applications can be handled by the array of standard, off-the-shelf inductor products offered by the major suppliers.

Selecting Freewheeling Diode

Highest efficiency operation requires the use of a Schottky type diode. DC switching losses are minimized due to its low forward voltage drop, and AC behavior is benign due to its lack of a significant reverse recovery time. Schottky diodes are generally available with reverse voltage ratings of 60V and even 100V, and are price competitive with other types.

The use of so-called "ultrafast" recovery diodes is generally not recommended. When operating in continuous mode, the reverse recovery time exhibited by "ultrafast" diodes will result in a slingshot type effect. The power internal switch will ramp up V_{IN} current into the diode in an attempt to get it to recover. Then, when the diode has finally turned off, some tens of nanoseconds later, the V_{SW} node voltage ramps up at an extremely high dV/dt, perhaps 5 to even 10V/ns ! With real world lead inductances, the V_{SW} node can easily overshoot the V_{IN} rail. This can result in poor RFI behavior and if the overshoot is severe enough, damage the IC itself.

Selecting Bypass Capacitors

The basic topology as shown in Figure 1 uses two bypass capacitors, one for the V_{IN} input supply and one for the V_{OUT} output supply.

User selection of an appropriate output capacitor is relatively easy, as this capacitor sees only the AC ripple current in the inductor. As the LT1776 is designed for buck or step-down applications, output voltage will nearly always be compatible with tantalum type capacitors, which are generally available in ratings up to 35V or so. These tantalum types offer good volumetric efficiency and many are available with specified ESR performance. The product of inductor AC ripple current and output capacitor ESR will manifest itself as peak-to-peak voltage ripple on the output node. (Note: If this ripple becomes too large, heavier control loop compensation, at least at the switching frequency, may be required on the V_C pin.) The most demanding applications, requiring very low output ripple, may be best served not with a single extremely large output capacitor, but instead by the common technique of a separate L/C lowpass post filter in series with the output. (In this case, "Two caps are better than one".)

The input bypass capacitor is normally a more difficult choice. In a typical application e.g., $40V_{IN}$ to $5V_{OUT}$, relatively heavy V_{IN} current is drawn by the power switch for only a small portion of the oscillator period (low ON duty cycle). The resulting RMS ripple current, for which the capacitor must be rated, is often several times the DC average V_{IN} current. Similarly, the "glitch" seen on the V_{IN} supply as the power switch turns on and off will be related to the product of capacitor ESR, and the relatively high instantaneous current drawn by the switch. To compound these problems is the fact that most of these applications will be designed for a relatively high input voltage, for which tantalum capacitors are generally unavailable. Relatively bulky "high frequency" aluminum electrolytic types, specifically constructed and rated for switching supply applications, may be the only choice.

Input Voltage vs Operating Frequency Considerations

The absolute maximum input supply voltage for the LT1776 is specified at 60V. This is based solely on internal semiconductor junction breakdown effects. Due to internal power dissipation, the actual maximum V_{IN} achievable in a particular application may be less than this.

A detailed theoretical basis for estimating internal power loss is given in the section, Thermal Considerations. Note

APPLICATIONS INFORMATION

that AC switching loss is proportional to both operating frequency and output current. The majority of AC switching loss is also proportional to the **square** of input voltage. For example, while the combination of V_{IN} = 40V, V_{OUT} = 5V at 500mA and f_{OSC} = 200kHz may be easily achievable, simultaneously raising V_{IN} to 60V and f_{OSC} to 400kHz is not possible. Nevertheless, input voltage *transients* up to 60V can usually be accommodated, assuming the resulting increase in internal dissipation is of insufficient time duration to raise die temperature significantly.

A second consideration is controllability. A potential limitation occurs with a high step-down ratio of V_{IN} to V_{OUT}, as this requires a correspondingly narrow minimum switch ON time. An approximate expression for this (assuming continuous mode operation) is given as follows:

$$\text{Min } t_{ON} = \frac{V_{OUT} + V_F}{V_{IN}\left(f_{OSC}\right)}$$

where:
V_{IN} = input voltage
V_{OUT} = output voltage
V_F = Schottky diode forward drop
f_{OSC} = switching frequency

It is important to understand the nature of minimum switch ON time as given in the data sheet. This test is intended to mimic behavior under short-circuit conditions. It is performed with the V_C control voltage at its clamp level (V_{CL}) and uses a fixed resistive load from V_{SW} to ground for simplicity. The resulting ON time behavior is overconservative as a general operating design value for two reasons. First, actual power supply application circuits present an inductive load to the V_{SW} node. The resulting ramping current behavior helps overdrive the current comparator (current mode switching) and reduce its propagation delay, hastening output switch turnoff. Second, and more importantly, actual power supply operation involves a feedback amplifier that adjusts the V_C node control voltage to maintain proper output voltage. As progressively shorter ON times are required, the feedback loop acts to reduce V_C, and the resulting overdrive further reduces the propagation delay in the current comparator. A suggested worst-case limit for minimum switch ON time in actual operation is 350ns.

A potential controllability problem arises if the LT1776 is called upon to produce an ON time shorter than its ability. Feedback loop action will lower then reduce the V_C control voltage to the point where some sort of cycle-skipping or odd/even cycle behavior is exhibited.

In summary:

1. Be aware that the simultaneous requirements of high V_{IN}, high I_{OUT} and high f_{OSC} may not be achievable in practice due to internal dissipation. The Thermal Considerations section offers a basis to estimate internal power. In questionable cases a prototype supply should be built and exercised to verify acceptable operation.
2. The simultaneous requirements of high V_{IN}, low V_{OUT} and high f_{OSC} can result in an unacceptably short minimum switch ON time. Cycle skipping and/or odd/even cycle behavior will result although correct output voltage is usually maintained.

Minimum Load Considerations

As discussed previously, a lightly loaded LT1776 with V_C pin control voltage below the boost threshold will operate in low dV/dt mode. This affords greater controllability at light loads, as minimum t_{ON} requirements are relaxed.

However, some users may be indifferent to pulse skipping behavior, but instead may be concerned with maintaining maximum possible efficiency at light loads. This requirement can be satisfied by forcing the part into Burst Mode™ operation. The use of an external comparator whose output controls the shutdown pin allows high efficiency at light loads through Burst Mode operation behavior (see Typical Applications and Figure 8).

Maximum Load/Short-Circuit Considerations

The LT1776 is a current mode controller. It uses the V_C node voltage as an input to a current comparator which turns off the output switch on a cycle-by-cycle basis as this peak current is reached. The internal clamp on the V_C node, nominally 2V, then acts as an output switch peak current limit. This action becomes the switch current limit specification. The maximum available output power is then determined by the switch current limit.

Burst Mode is a trademark of Linear Technology Corporation.

APPLICATIONS INFORMATION

A potential controllability problem could occur under short-circuit conditions. If the power supply output is short circuited, the feedback amplifier responds to the low output voltage by raising the control voltage, V_C, to its peak current limit value. Ideally, the output switch would be turned on, and then turned off as its current exceeded the value indicated by V_C. However, there is finite response time involved in both the current comparator and turnoff of the output switch. These result in a minimum ON time $t_{ON(MIN)}$. When combined with the large ratio of V_{IN} to $(V_F + I \bullet R)$, the diode forward voltage plus inductor $I \bullet R$ voltage drop, the potential exists for a loss of control. Expressed mathematically the requirement to maintain control is:

$$f \bullet t_{ON} \leq \frac{V_F + I \bullet R}{V_{IN}}$$

where:
f = switching frequency
t_{ON} = switch ON time
V_F = diode forward voltage
V_{IN} = Input voltage
$I \bullet R$ = inductor $I \bullet R$ voltage drop

If this condition is not observed, the current will not be limited at I_{PK}, but will cycle-by-cycle ratchet up to some higher value. Using the nominal LT1776 clock frequency of 200KHz, a V_{IN} of 40V and a $(V_F + I \bullet R)$ of say 0.7V, the maximum t_{ON} to maintain control would be approximately 90ns, an unacceptably short time.

The solution to this dilemma is to slow down the oscillator when the FB pin voltage is abnormally low thereby indicating some sort of short-circuit condition. Figure 2 shows the typical response of Oscillator Frequency vs FB divider Thevenin voltage and impedance. Oscillator frequency is unaffected until FB voltage drops to about 2/3 of its normal value. Below this point the oscillator frequency decreases roughly linearly down to a limit of about 30kHz. This lower oscillator frequency during short-circuit conditions can then maintain control with the effective minimum ON time.

A further potential problem with short-circuit operation might occur if the user were operating the part with its oscillator slaved to an external frequency source via the SYNC pin. However, the LT1776 has circuitry that automatically disables the sync function when the oscillator is slowed down due to abnormally low FB voltage.

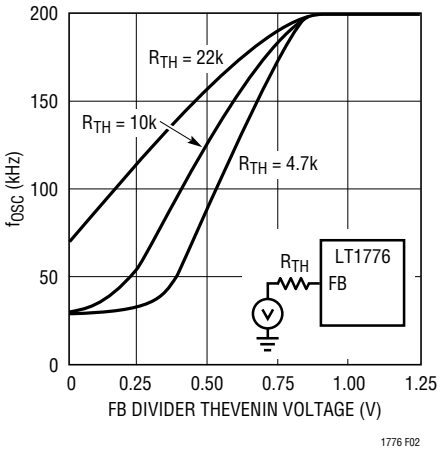

Figure 2. Oscillator Frequency vs FB Divider Thevenin Voltage and Impedance

Feedback Divider Considerations

An LT1776 application typically includes a resistive divider between V_{OUT} and ground, the center node of which drives the FB pin to the reference voltage V_{REF}. This establishes a fixed ratio between the two resistors, but a second degree of freedom is offered by the overall impedance level of the resistor pair. The most obvious effect this has is one of efficiency—a higher resistance feedback divider will waste less power and offer somewhat higher efficiency, especially at light load.

However, remember that oscillator slowdown to achieve short-circuit protection (discussed above) is dependent on FB pin behavior, and this in turn, is sensitive to FB node external impedance. Figure 2 shows the typical relationship between FB divider Thevenin voltage and impedance, and oscillator frequency. This shows that as feedback network impedance increases beyond 10k, complete oscillator slowdown is not achieved, and short-circuit protection may be compromised. And as a practical matter, the product of FB pin bias current and larger FB network impedances will cause increasing output voltage error. (Nominal cancellation for 10k of FB Thevenin impedance is included internally.)

APPLICATIONS INFORMATION

Thermal Considerations

Care should be taken to ensure that the worst-case input voltage and load current conditions do not cause excessive die temperatures. The packages are rated at 110°C/W for the 8-pin SO (S8) and 130°C/W for 8-pin PDIP (N8).

Quiescent power is given by:

$$P_Q = I_{IN} \bullet V_{IN} + I_{VCC} \bullet V_{OUT}$$

(This assumes that the V_{CC} pin is connected to V_{OUT}.)

Power loss internal to the LT1776 related to actual output current is composed of both DC and AC switching losses. These can be roughly estimated as follows:

DC switching losses are dominated by output switch "ON voltage", i.e.,

$$P_{DC} = V_{ON} \bullet I_{OUT} \bullet DC$$

V_{ON} = Output switch ON voltage, typically 1V at 500mA
I_{OUT} = Output current
DC = ON duty cycle

AC switching losses are typically dominated by power lost due to the finite rise time and fall time at the V_{SW} node. Assuming, for simplicity, a linear ramp up of both voltage and current and a current rise/fall time equal to 15ns,

$$P_{AC} = 1/2 \bullet V_{IN} \bullet I_{OUT} \bullet (t_r + t_f + 30ns) \bullet f$$

$t_r = (V_{IN}/1.6)$ns in high dV/dt mode
$(V_{IN}/0.16)$ns in low dV/dt mode
$t_f = (V_{IN}/1.6)$ns (irrespective of dV/dt mode)
f = switching frequency

Total power dissipation of the die is simply the sum of quiescent, DC and AC losses previously calculated.

$$P_{D(TOTAL)} = P_Q + P_{DC} + P_{AC}$$

Frequency Compensation

Loop frequency compensation is performed by connecting a capacitor, or in most cases a series RC, from the output of the error amplifier (V_C pin) to ground. Proper loop compensation may be obtained by empirical methods as described in detail in Application Note 19. Briefly, this involves applying a load transient and observing the dynamic response over the expected range of V_{IN} and I_{LOAD} values.

As a practical matter, a second small capacitor, directly from the V_C pin to ground is generally recommended to attenuate capacitive coupling from the V_{SW} pin. A typical value for this capacitor is 100pF. (See Switch Node Considerations).

Switch Node Considerations

For maximum efficiency, switch rise and fall times are made as short as practical. To prevent radiation and high frequency resonance problems, proper layout of the components connected to the IC is essential, especially the power path. B field (magnetic) radiation is minimized by keeping output diode, switch pin and input bypass capacitor leads as short as possible. E field radiation is kept low by minimizing the length and area of all traces connected to the switch pin (V_{SW}). A ground plane should always be used under the switcher circuitry to prevent interplane coupling.

The high speed switching current path is shown schematically in Figure 3. Minimum lead length in these paths is essential to ensure clean switching and minimal EMI. The paths containing the input capacitor, output switch and output diode are the only ones containing nanosecond rise and fall times. Keep these paths as short as possible.

Additionally, it is possible for the LT1776 to cause EMI problems by "coupling to itself". Specifically, this can occur if the V_{SW} pin is allowed to capacitively couple in an uncontrolled manner to the part's high impedance nodes, i.e., $\overline{SHDN}$, SYNC, V_C and FB. This can cause erratic operation such as odd/even cycle behavior, pulse width

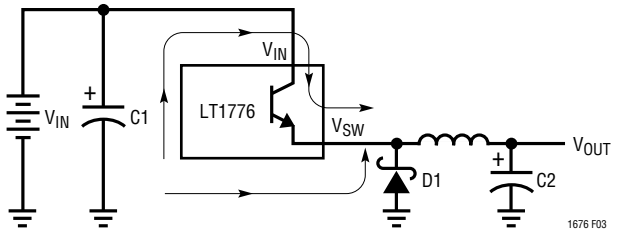

Figure 3. High Speed Current Switching Paths

APPLICATIONS INFORMATION

"nervousness", improper output voltage and/or premature current limit action.

As an example, assume that the capacitance between the V_{SW} node and a high impedance pin node is 0.1pF, and further assume that the high impedance node in question exhibits a capacitance of 1pF to ground. Due to the high dV/dt, large excursion behavior of the V_{SW} node, this will couple a nearly 4V transient to the high impedance pin, causing abnormal operation. (This assumes the "typical" $40V_{IN}$ to $5V_{OUT}$ application.) An explicit 100pF capacitor added to the node will reduce the amplitude of the disturbance to more like 50mV (although settling time will increase).

Specific pin recommendations are as follows:

$\overline{SHDN}$: If unused, add a 100pF capacitor to ground.

SYNC: Ground if unused.

V_C: Add a 100pF capacitor directly to ground in addition to the explicit compensation network.

FB: Assuming the V_C pin is handled properly, this pin usually requires no explicit capacitor of its own, but keep this node physically small to minimize stray capacitance.

TYPICAL APPLICATIONS

Minimum Component Count Application

Figure 4a shows a basic "minimum component count" application. The circuit produces 5V at up to 500mA I_{OUT} with input voltages in the range of 10V to 40V. The typical P_{OUT}/P_{IN} efficiency is shown in Figure 4b. As shown, the $\overline{SHDN}$ and SYNC pins are unused, however either (or both) can be optionally driven by external signals as desired.

User Programmable Undervoltage Lockout

Figure 5 adds a resistor divider to the basic application. This is a simple, cost-effective way to add a user-programmable undervoltage lockout (UVLO) function. Resistor R5 is chosen to have approximately 200μA through it at the nominal $\overline{SHDN}$ pin lockout threshold of 1.25V. The somewhat arbitrary value of 200μA was

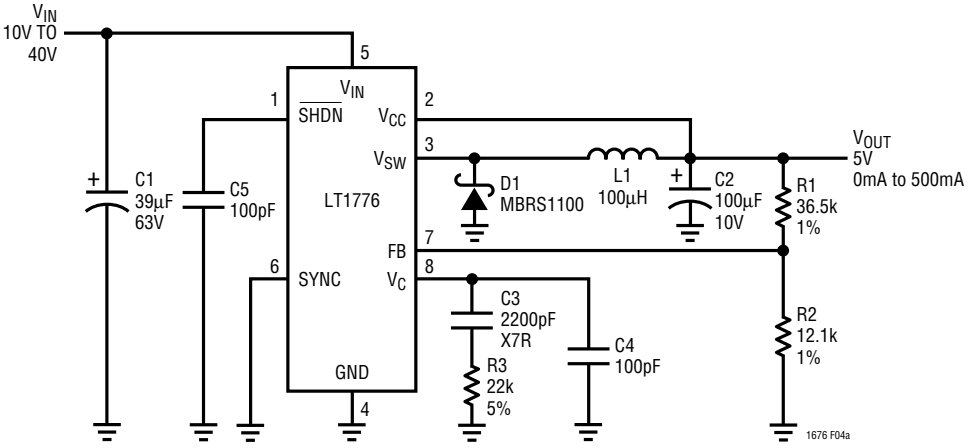

C1: PANASONIC HFQ
C2: AVX D CASE TPSD107M010R0080
C4, C5: X7R OR COG/NPO
D1: MOTOROLA 100V, 1A, SMD SCHOTTKY
L1: COILCRAFT DO3316P-104

FOR 3.3V V_{OUT} VERSION:
R1: 24.3K, R2: 14.7k
L1: 68μH, DO3316P-683
I_{OUT}: 0mA TO 500mA

Figure 4a. Minimum Component Count Application

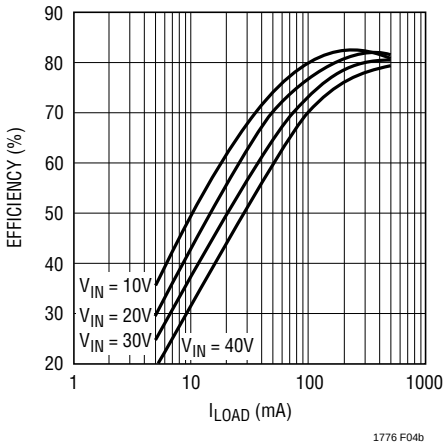

Figure 4b. P_{OUT}/P_{IN} Efficiency

TYPICAL APPLICATIONS

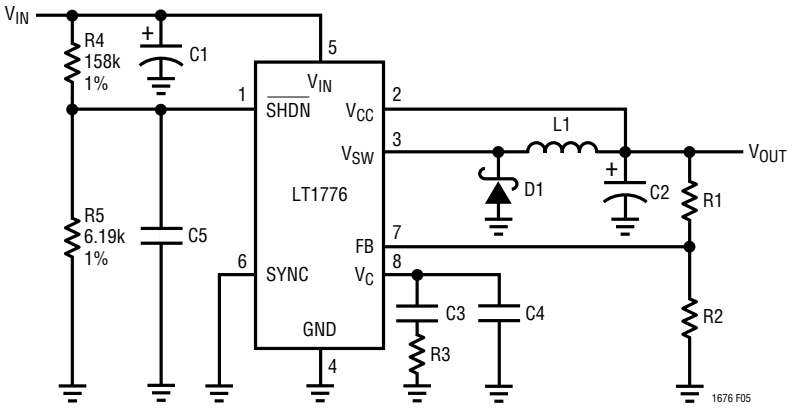

Figure 5. User Programmable Undervoltage Lockout

chosen to be significantly above the $\overline{SHDN}$ pin input current to minimize its error contribution, but significantly below the typical 3.8mA the LT1776 draws in lockout mode. Resistor R4 is then chosen to yield this same 200µA, less 2.5µA, with the desired V_{IN} UVLO voltage minus 1.25V applied across it. (The 2.5µA factor is an allowance to minimize error due to $\overline{SHDN}$ pin input current.)

Behavior is as follows: Normal operation is observed at the nominal input voltage of 40V. As the input voltage is decreased to roughly 32V, switching action will stop, V_{OUT} will drop to zero, and the LT1776 will draw its V_{IN} and V_{CC} quiescent currents from the V_{IN} supply. At a much lower input voltage, typically 8V or so at 25°C, the voltage on the $\overline{SHDN}$ pin will drop to the shutdown threshold, and the part will draw its shutdown current only from the V_{IN} rail. The resistive divider of R4 and R5 will continue to draw power from V_{IN}. (The user should be aware that while the $\overline{SHDN}$ pin *lockout* threshold is relatively accurate including temperature effects, the $\overline{SHDN}$ pin *shutdown* threshold is more coarse, and exhibits considerably more temperature drift. Nevertheless the shutdown threshold will always be well below the lockout threshold.)

Minimum Size Inductor Application

Figure 4a employs power path parts that are capable of delivering the full rated output capability of the LT1776. Potential users with low output current requirements may be interested in substituting a physically smaller and less costly power inductor. The circuit shown in Figure 6a is topologically identical to the basic application, but specifies a much smaller inductor. This circuit is capable of delivering up to 400mA at 5V, or, up to 500mA at 3.3V. The only disadvantage is that due to the increased resistance in the inductor, the circuit is no longer capable of withstanding indefinite short circuits to ground. The LT1776 will still current limit at its nominal I_{LIM} value, but this will overheat the inductor. Momentary short circuits of a few seconds or less can still be tolerated. Typical efficiency is shown in Figure 6b.

Burst Mode Operation Configuration

Figure 4b demonstrates that power supply efficiency degrades with lower output load current. This is not surprising, as the LT1776 itself represents a fixed power overhead. A possible way to improve light load efficiency is in Burst Mode operation.

Figure 7 shows the LT1776 configured for Burst Mode operation. Output voltage regulation is now provided in a "bang-bang" digital manner, via comparator U2, an LTC1440. Resistor divider R3/R4 provides a scaled version of the output voltage, which is compared against U2's internal reference. Intentional hysteresis is set by the R5/R6 divider. As the output voltage falls below the regulation range, the LT1776 is turned on. The output voltage rises, and as it climbs above the regulation range, the LT1776 is turned off. Efficiency is maximized, as the LT1776 is only powered up while it is providing heavy output current. Figure 7b shows that efficiency is typically maintained at 75% or better down to a load current of 10mA. Even at a load of 1mA, efficiency is still a respectable 58% to 68%, depending on V_{IN}.

TYPICAL APPLICATIONS

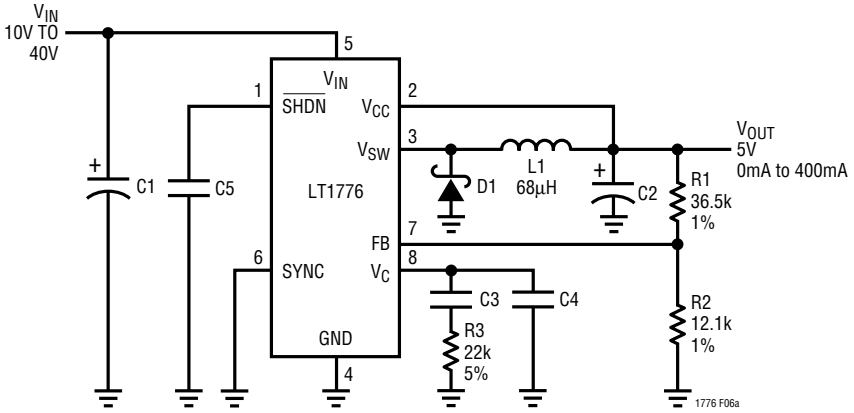

C1: PANASONIC HFQ 39µF AT 63V
C2: AVX D CASE 100µF 10V
TPSD107M010R0080
C3: 2200pF, X7R

C4, C5: 100pF, X7R OR COG/NPO
D1: MOTOROLA 100V, 1A, SMD SCHOTTKY
MBRS1100 (T3)
L1: COILCRAFT DO1608C-683

FOR 3.3V V_{OUT} VERSION:
I_{OUT}: 0mA TO 500mA
L1: 47µH, DO1608C-473
R1: 24.3K, R2: 14.7k

(a)

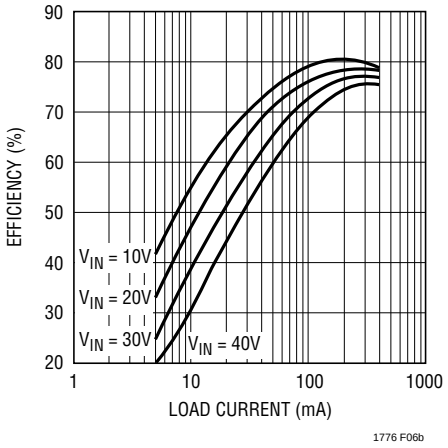

(b)

Figure 6. Minimum Inductor Size Application

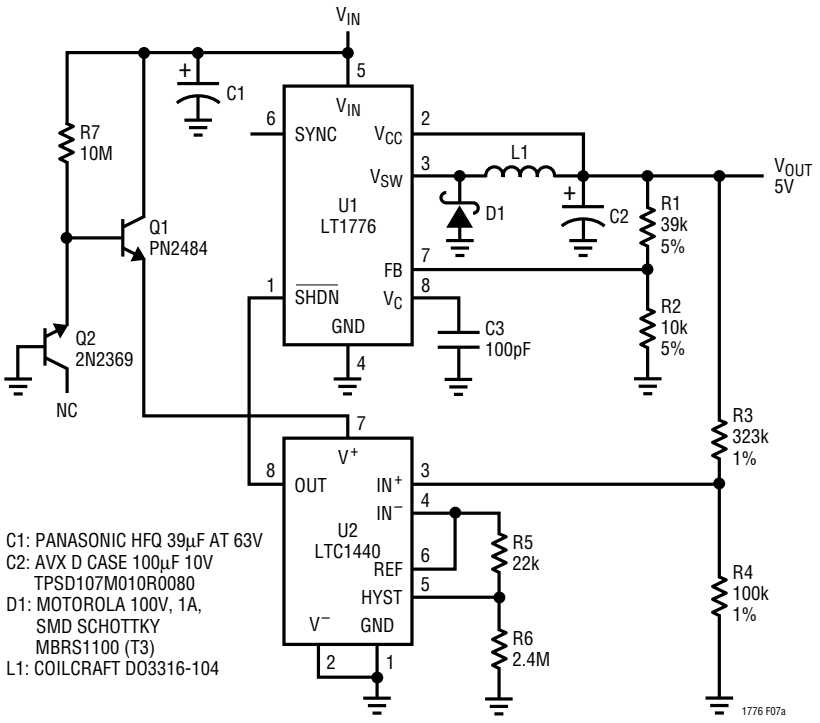

C1: PANASONIC HFQ 39µF AT 63V
C2: AVX D CASE 100µF 10V
TPSD107M010R0080
D1: MOTOROLA 100V, 1A,
SMD SCHOTTKY
MBRS1100 (T3)
L1: COILCRAFT DO3316-104

(a)

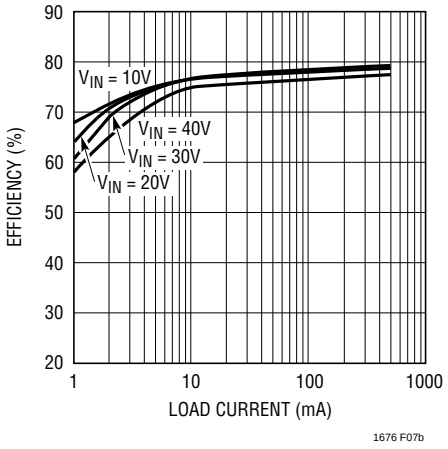

(b)

Figure 7. Burst Mode Operation Configuration for High Efficiency at Light Load

Resistor divider R1/R2 is still present, but does not directly influence output voltage. It is chosen to ensure that the LT1776 delivers high output current throughout the voltage regulation range. Its presence is also required to maintain proper short-circuit protection. Transistors Q1, Q2 and resistor R7 form a high V_{IN}, low quiescent current voltage regulator to power U2.

TYPICAL APPLICATIONS

Wide V_{IN} Range, High Efficiency Battery Charger

The circuit on the final page of this data sheet shows the LT1776 configured as a constant-current/constant-voltage battery charger. An LT1620 rail-to-rail, current sense amplifier (U2) monitors the differential voltage across current sense resistor R4. As this equals and exceeds the voltage set across resistor R5 in the R5/R6 divider, the LT1620 responds by sinking current at its I_{OUT} pin. This is connected to the V_C control node of the LT1776 and therefore acts to reduce the amount of power delivered to the load. The overall constant-current/constant-voltage behavior can be seen in the graph titled Battery Charger Output Voltage vs Output Current.

Target voltage and current limits are independently programmable. Output voltage, presently 6V, is set by the R1/R2 divider and the internal reference of the LT1776. Output current, presently 200mA, is set by current sense resistor R4 and the R5-R6 divider.

The circuit, as shown, accommodates an input voltage range of 10V to 30V. The accompanying graphs display efficiency for input voltages of 12V and 24V. The upper input voltage limit of 30V is determined not by the LT1776, but by the LT1121-5 regulator (U3). (A regulated 5V is required by the LT1620.) This regulator was chosen for its micropower behavior, which helps maintain good overall efficiency. However, the basic catalog part is only rated to 30V. Substitution of the industry standard LM317, for example, extends the allowable input voltage to 40V (or more with the HV part), but its greater quiescent current drain degrades efficiency from that shown.

PACKAGE DESCRIPTION

Dimensions in inches (millimeters) unless otherwise noted.

N8 Package
8-Lead PDIP (Narrow 0.300)
(LTC DWG # 05-08-1510)

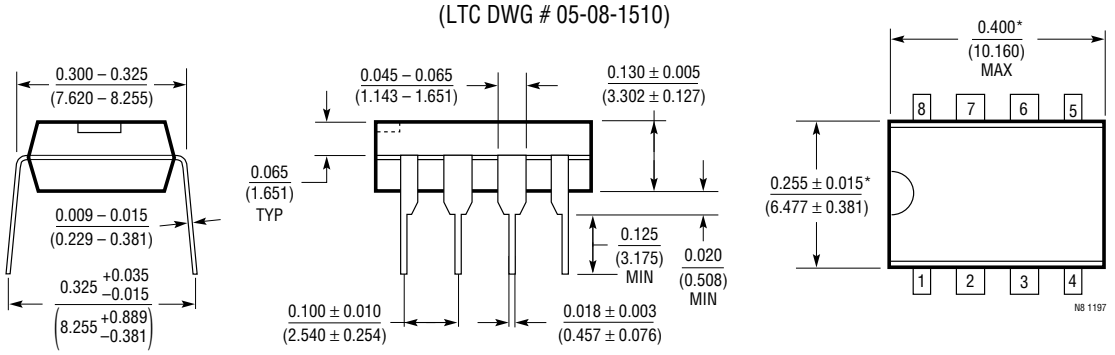

*THESE DIMENSIONS DO NOT INCLUDE MOLD FLASH OR PROTRUSIONS.
MOLD FLASH OR PROTRUSIONS SHALL NOT EXCEED 0.010 INCH (0.254mm)

S8 Package
8-Lead Plastic Small Outline (Narrow 0.150)
(LTC DWG # 05-08-1610)

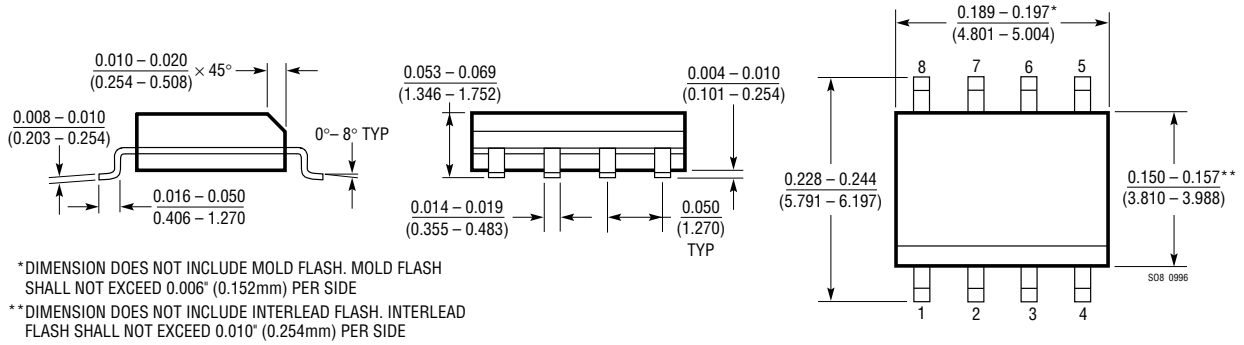

*DIMENSION DOES NOT INCLUDE MOLD FLASH. MOLD FLASH SHALL NOT EXCEED 0.006" (0.152mm) PER SIDE

**DIMENSION DOES NOT INCLUDE INTERLEAD FLASH. INTERLEAD FLASH SHALL NOT EXCEED 0.010" (0.254mm) PER SIDE

TYPICAL APPLICATION

Wide V_{IN} Range, High Efficiency Battery Charger

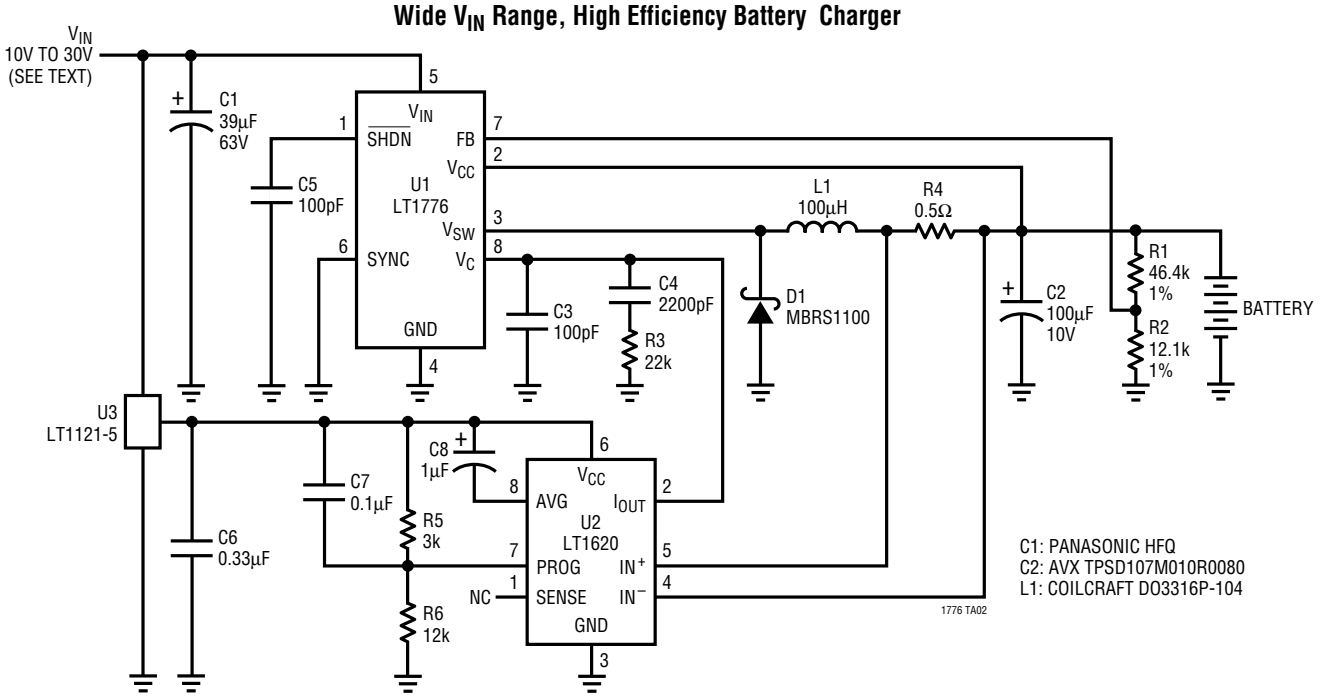

Battery Charger Efficiency — Constant V_{OUT} Region

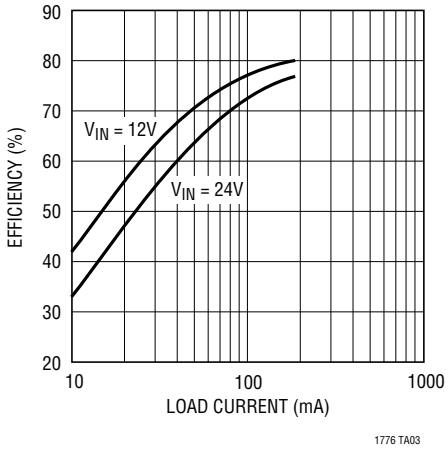

Battery Charger Efficiency — Constant I_{OUT} Region

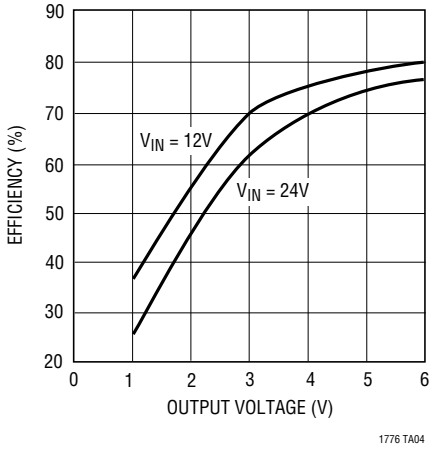

Battery Charger Output Voltage vs Output Current

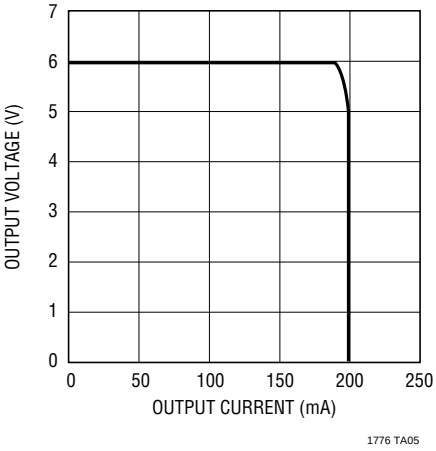

RELATED PARTS

PART NUMBER	DESCRIPTION	COMMENTS
LT1076	2A, 100kHz Step-Down Switching Regulator	Operation Up to 45V Input (64V for HV Version)
LTC®1149	High Efficiency Synchronous Step-Down Switching Regulator	Operation Up to 48V Input, 95% Efficiency, 100% Duty Cycle
LT1374	4.5A, 500kHz Step-Down Switching Regulator	Converts 12V to 3.3V at 2.5A in SO-8 Package
LT1375/LT1376	1.5A, 500kHz Step-Down Switching Regulators	Operation Up to 25V Input, Synchronizable (LT1375)
LT1620	Rail-to-Rail Current Sense Amplifier	Transforms Switching Regulators into High Efficiency Battery Chargers
LT1676	Wide Input Range, High Efficiency, Step-Down Switching Regulator	7.4V to 60V Input, 100kHz Operation, 700mA Internal Switch