INITIAL RELEASE
Final Electrical Specifications
LT1352/LT1353

Dual and Quad 250µA, 3MHz, 200V/µs Op Amps

January 1996

FEATURES

- **3MHz Gain Bandwidth**
- **200V/µs Slew Rate**
- **250µA Supply Current per Amplifier**
- C-Load™ Op Amp Drives All Capacitive Loads
- Unity-Gain Stable
- Maximum Input Offset Voltage: 600µV
- Maximum Input Bias Current: 50nA
- Maximum Input Offset Current: 15nA
- Minimum DC Gain, R_L = 2k: 30V/mV
- Input Noise Voltage: 14nV/√Hz
- Settling Time to 0.1%, 10V Step: 700ns
- Settling Time to 0.01%, 10V Step: 1.25µs
- Minimum Output Swing into 1k: ±13V
- Minimum Output Swing into 500Ω: ±3.4V
- Specified at ±2.5V, ±5V and ±15V

APPLICATIONS

- Battery-Powered Systems
- Wideband Amplifiers
- Buffers
- Active Filters
- Data Acquisition Systems
- Photodiode Amplifiers

DESCRIPTION

The LT®1352/LT1353 are dual and quad, very low power, high speed operational amplifiers with outstanding AC and DC performance. The amplifiers feature much lower supply current and higher slew rate than devices with comparable bandwidth. The circuit combines the slewing performance of a current feedback amplifier in a true operational amplifier with matched high impedance inputs. The high slew rate ensures that the large signal bandwidth is not degraded. Each output is capable of driving a 1kΩ load to ±13V with ±15V supplies and a 500Ω load to ±3.4V on ±5V supplies.

The LT1352/LT1353 are members of a family of fast, high performance amplifiers using this unique topology and employing Linear Technology Corporation's advanced bipolar complementary processing. For higher bandwidth devices with higher supply current see the LT1354 through LT1365 data sheets. Bandwidths of 12MHz, 25MHz, 50MHz and 70MHz are available with 1mA, 2mA, 4mA and 6mA of supply current per amplifier. Singles, duals and quads of each amplifier are available.

TYPICAL APPLICATION

Instrumentation Amplifier

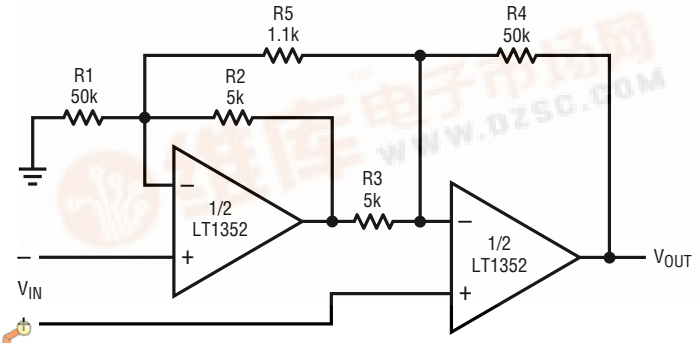

GAIN = [R4/R2][1 + (1/2)(R2/R1 + R3/R4) + (R2 + R3)/R5] = 102
TRIM R5 FOR GAIN
TRIM R1 FOR COMMON MODE REJECTION
BW = 30kHz

1352/53 TA01

Large-Signal Response

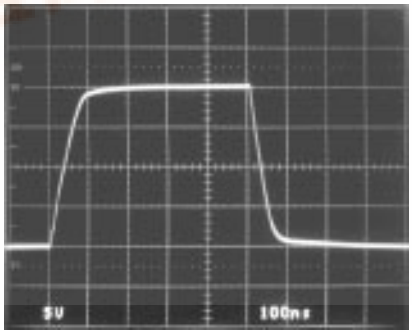

A_V = –1

1352/53 TA02

ABSOLUTE MAXIMUM RATINGS

Total Supply Voltage (V^+ to V^-) 36V
Differential Input Voltage ..... ±10V
Input Voltage ..... $\pm V_S$
Output Short-Circuit Duration (Note 1) ..... Indefinite
Operating Temperature Range
LT1352C/LT1353C ..... –40°C to 85°C
Specified Temperature Range
LT1352C/LT1353C ..... –40°C to 85°C
Maximum Junction Temperature (See Below)
Plastic Package ..... 150°C
Storage Temperature Range ..... –65°C to 150°C
Lead Temperature (Soldering, 10 sec) ..... 300°C

PACKAGE/ORDER INFORMATION

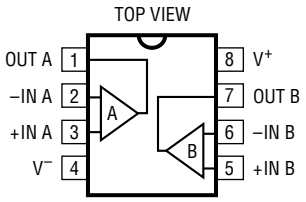

N8 PACKAGE
8-LEAD PDIP
S8 PACKAGE
8-LEAD PLASTIC SO

T_{JMAX} = 150°C, θ_{JA} = 130°C/W (N8)
T_{JMAX} = 150°C, θ_{JA} = 190°C/W (S8)

ORDER PART NUMBER
LT1352CN8 LT1352CS8
S8 PART MARKING
1352

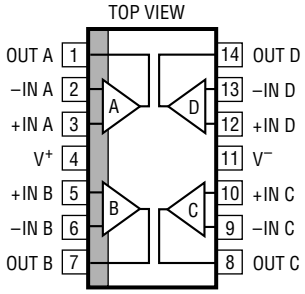

S PACKAGE
14-LEAD PLASTIC SO

T_{JMAX} = 150°C, θ_{JA} = 150°C/W

ORDER PART NUMBER
LT1353CS

Consult factory for Industrial and Military grade parts.

ELECTRICAL CHARACTERISTICS T_A = 25°C, V_{CM} = 0V unless otherwise noted.

SYMBOL	PARAMETER	CONDITIONS	V_{SUPPLY}	MIN	TYP	MAX	UNITS
V_{OS}	Input Offset Voltage		±15V ±5V ±2.5V		0.2 0.2 0.3	0.6 0.6 0.8	mV mV mV
I_{OS}	Input Offset Current		±2.5V to ±15V		5	15	nA
I_B	Input Bias Current		±2.5V to ±15V		15	50	nA
e_n	Input Noise Voltage	f = 10kHz	±2.5V to ±15V		14		$nV/\sqrt{Hz}$
i_n	Input Noise Current	f = 10kHz	±2.5V to ±15V		0.5		$pA/\sqrt{Hz}$
R_{IN}	Input Resistance	V_{CM} = ±12V Differential	±15V ±15V	300	600 20		MΩ MΩ
C_{IN}	Input Capacitance		±15V		3		pF
	Positive Input Voltage Range		±15V ±5V ±2.5V	12.0 2.5 0.5	13.5 3.5 1.0		V V V
	Negative Input Voltage Range		±15V ±5V ±2.5V		–13.5 –3.5 –1.0	–12.0 –2.5 –0.5	V V V

ELECTRICAL CHARACTERISTICS $T_A = 25°C$, $V_{CM} = 0V$ unless otherwise noted.

SYMBOL	PARAMETER	CONDITIONS	V_{SUPPLY}	MIN	TYP	MAX	UNITS
CMRR	Common Mode Rejection Ratio	$V_{CM} = \pm12V$ $V_{CM} = \pm2.5V$ $V_{CM} = \pm0.5V$	±15V ±5V ±2.5V	80 78 68	94 86 77		dB dB dB
PSRR	Power Supply Rejection Ratio	$V_S = \pm2.5V$ to $\pm15V$		90	106		dB
A_{VOL}	Large-Signal Voltage Gain	$V_{OUT} = \pm12V$, $R_L = 5k$ $V_{OUT} = \pm10V$, $R_L = 2k$ $V_{OUT} = \pm10V$, $R_L = 1k$ $V_{OUT} = \pm2.5V$, $R_L = 5k$ $V_{OUT} = \pm2.5V$, $R_L = 2k$ $V_{OUT} = \pm2.5V$, $R_L = 1k$ $V_{OUT} = \pm1V$, $R_L = 5k$	±15V ±15V ±15V ±5V ±5V ±5V ±2.5V	40 30 20 30 25 15 20	80 60 40 60 50 30 40		V/mV V/mV V/mV V/mV V/mV V/mV V/mV
V_{OUT}	Output Swing	$R_L = 5k$, $V_{IN} = \pm10mV$ $R_L = 2k$, $V_{IN} = \pm10mV$ $R_L = 1k$, $V_{IN} = \pm10mV$ $R_L = 1k$, $V_{IN} = \pm10mV$ $R_L = 500\Omega$, $V_{IN} = \pm10mV$ $R_L = 5k$, $V_{IN} = \pm10mV$	±15V ±15V ±15V ±5V ±5V ±2.5V	13.5 13.4 13.0 3.5 3.4 1.3	14.0 13.8 13.4 4.0 3.8 1.7		±V ±V ±V ±V ±V ±V
I_{OUT}	Output Current	$V_{OUT} = \pm13V$ $V_{OUT} = \pm3.4V$	±15V ±5V	13.0 6.8	13.4 7.6		mA mA
I_{SC}	Short-Circuit Current	$V_{OUT} = 0V$, $V_{IN} = \pm3V$	±15V	30	44		mA
SR	Slew Rate	$A_V = -1$, $R_L = 5k$ (Note 2)	±15V ±5V	120 30	200 50		V/µs V/µs
	Full-Power Bandwidth	10V Peak (Note 3) 3V Peak (Note 3)	±15V ±5V		3.2 2.6		MHz MHz
GBW	Gain Bandwidth	f = 200kHz, $R_L = 10k$	±15V ±5V ±2.5V	2.0 1.8	3.0 2.7 2.5		MHz MHz MHz
t_r, t_f	Rise Time, Fall Time	$A_V = 1$, 10% to 90%, 0.1V	±15V ±5V		46 53		ns ns
	Overshoot	$A_V = 1$, 0.1V	±15V ±5V		13 16		% %
	Propagation Delay	$A_V = 1$, 50% V_{IN} to 50% V_{OUT}, 0.1V	±15V ±5V		41 52		ns ns
t_s	Settling Time	10V Step, 0.1%, $A_V = -1$ 10V Step, 0.01%, $A_V = -1$ 5V Step, 0.1%, $A_V = -1$ 5V Step, 0.01%, $A_V = -1$	±15V ±15V ±5V ±5V		700 1250 950 1400		ns ns ns ns
R_O	Output Resistance	$A_V = 1$, f = 20kHz	±15V		1.5		Ω
	Channel Separation	$V_{OUT} = \pm10V$, $R_L = 2k$	±15V	101	120		dB
I_S	Supply Current	Each Amplifier	±15V ±5V		250 230	320 300	µA µA

ELECTRICAL CHARACTERISTICS $0°C \le T_A \le 70°C$, V_{CM} = 0V unless otherwise noted.

SYMBOL	PARAMETER	CONDITIONS	V_{SUPPLY}	MIN	TYP	MAX	UNITS
V_{OS}	Input Offset Voltage		±15V ±5V ±2.5V			0.8 0.8 1.0	mV mV mV
	Input V_{OS} Drift	(Note 4)	±2.5V to ±15V		3	8	µV/°C
I_{OS}	Input Offset Current		±2.5V to ±15V			20	nA
I_B	Input Bias Current		±2.5V to ±15V			75	nA
CMRR	Common Mode Rejection Ratio	V_{CM} = ±12V V_{CM} = ±2.5V V_{CM} = ±0.5V	±15V ±5V ±2.5V	79 77 67			dB dB dB
PSRR	Power Supply Rejection Ratio	V_S = ±2.5V to ±15V		89			dB
A_{VOL}	Large-Signal Voltage Gain	V_{OUT} = ±12V, R_L = 5k V_{OUT} = ±10V, R_L = 2k V_{OUT} = ±10V, R_L = 1k V_{OUT} = ±2.5V, R_L = 5k V_{OUT} = ±2.5V, R_L = 2k V_{OUT} = ±2.5V, R_L = 1k V_{OUT} = ±1V, R_L = 5k	±15V ±15V ±15V ±5V ±5V ±5V ±2.5V	25 20 15 20 15 10 15			V/mV V/mV V/mV V/mV V/mV V/mV V/mV
V_{OUT}	Output Swing	R_L = 5k, V_{IN} = ±10mV R_L = 2k, V_{IN} = ±10mV R_L = 1k, V_{IN} = ±10mV R_L = 1k, V_{IN} = ±10mV R_L= 500Ω, V_{IN} = ±10mV R_L = 5k, V_{IN} = ±10mV	±15V ±15V ±15V ±5V ±5V ±2.5V	13.4 13.3 12.0 3.4 3.3 1.2			±V ±V ±V ±V ±V ±V
I_{OUT}	Output Current	V_{OUT} = ±12V V_{OUT} = ±3.3V	±15V ±5V	12.0 6.6			mA mA
I_{SC}	Short-Circuit Current	V_{OUT} = 0V, V_{IN} = ±3V	±15V	24			mA
SR	Slew Rate	A_V = –1, R_L = 5k (Note 2)	±15V ±5V	100 21			V/µs V/µs
GBW	Gain Bandwidth	f = 200kHz, R_L = 10k	±15V ± 5V	1.8 1.6			MHz MHz
	Channel Separation	V_{OUT} = ±10V, R_L = 2k	±15V	100			dB
I_S	Supply Current	Each Amplifier	±15V ±5V			350 330	µA µA

$-40°C \le T_A \le 85°C$, V_{CM} = 0V unless otherwise noted. (Note 5)

SYMBOL	PARAMETER	CONDITIONS	V_{SUPPLY}	MIN	TYP	MAX	UNITS
V_{OS}	Input Offset Voltage		±15V ±5V ±2.5V			1.0 1.0 1.2	mV mV mV
	Input V_{OS} Drift	(Note 4)	±2.5V to ±15V		3	8	µV/°C
I_{OS}	Input Offset Current		±2.5V to ±15V			30	nA
I_B	Input Bias Current		±2.5V to ±15V			100	nA
CMRR	Common Mode Rejection Ratio	V_{CM} = ±12V V_{CM} = ±2.5V V_{CM} = ±0.5V	±15V ±5V ±2.5V	77 76 66			dB dB dB
PSRR	Power Supply Rejection Ratio	V_S = ±2.5V to ±15V		88			dB

ELECTRICAL CHARACTERISTICS

$-40°C \le T_A \le 85°C$, V_{CM} = 0V unless otherwise noted. (Note 5)

SYMBOL	PARAMETER	CONDITIONS	V_{SUPPLY}	MIN	TYP	MAX	UNITS
A_{VOL}	Large-Signal Voltage Gain	V_{OUT} = ±12V, R_L = 5k	±15V	20			V/mV
		V_{OUT} = ±10V, R_L = 2k	±15V	15			V/mV
		V_{OUT} = ±2.5V, R_L = 5k	±5V	15			V/mV
		V_{OUT} = ±2 .5V, R_L = 2k	±5V	10			V/mV
		V_{OUT} = ±2.5V, R_L = 1k	±5V	8			V/mV
		V_{OUT} = ±1V, R_L = 5k	±2.5V	10			V/mV
V_{OUT}	Output Swing	R_L = 5k, V_{IN} = ±10mV	±15V	13.3			±V
		R_L = 2k, V_{IN} = ±10mV	±15V	13.2			±V
		R_L = 1k, V_{IN} = ±10mV	±15V	10.0			±V
		R_L = 1k, V_{IN} = ±10mV	±5V	3.3			±V
		R_L = 500Ω, V_{IN} = ±10mV	±5V	3.2			±V
		R_L = 5k, V_{IN} = ±10mV	±2.5V	1.1			±V
I_{OUT}	Output Current	V_{OUT} = ±10V	±15V	10.0			mA
		V_{OUT} = ±3.2V	±5V	6.4			mA
I_{SC}	Short-Circuit Current	V_{OUT} = 0V, V_{IN} = ±3V	±15V	20			mA
SR	Slew Rate	A_V = –1, R_L = 5k (Note 2)	±15V	50			V/µs
			±5V	15			V/µs
GBW	Gain Bandwidth	f = 200kHz, R_L = 10k	±15V	1.6			MHz
			± 5V	1.4			MHz
	Channel Separation	V_{OUT} = ±10V, R_L = 2k	±15V	99			dB
I_S	Supply Current	Each Amplifier	±15V			380	µA
			±5V			350	µA

Note 1: A heat sink may be required to keep the junction temperature below absolute maximum when the output is shorted indefinitely.

Note 2: Slew rate is measured between ±8V on the output with ±12V input for ±15V supplies and ±2V on the output with ±3V input for ±5V supplies.

Note 3: Full-power bandwidth is calculated: FPBW = (Slew Rate)/$2\pi V_P$.

Note 4: This parameter is not 100% tested.

Note 5: The LT1352/LT1353 are not tested and are not quality assurance sampled at –40°C and at 85°C. These specifications are guaranteed by design, correlation and/or inference from 0°C, 25°C and/or 70°C tests.

SIMPLIFIED SCHEMATIC

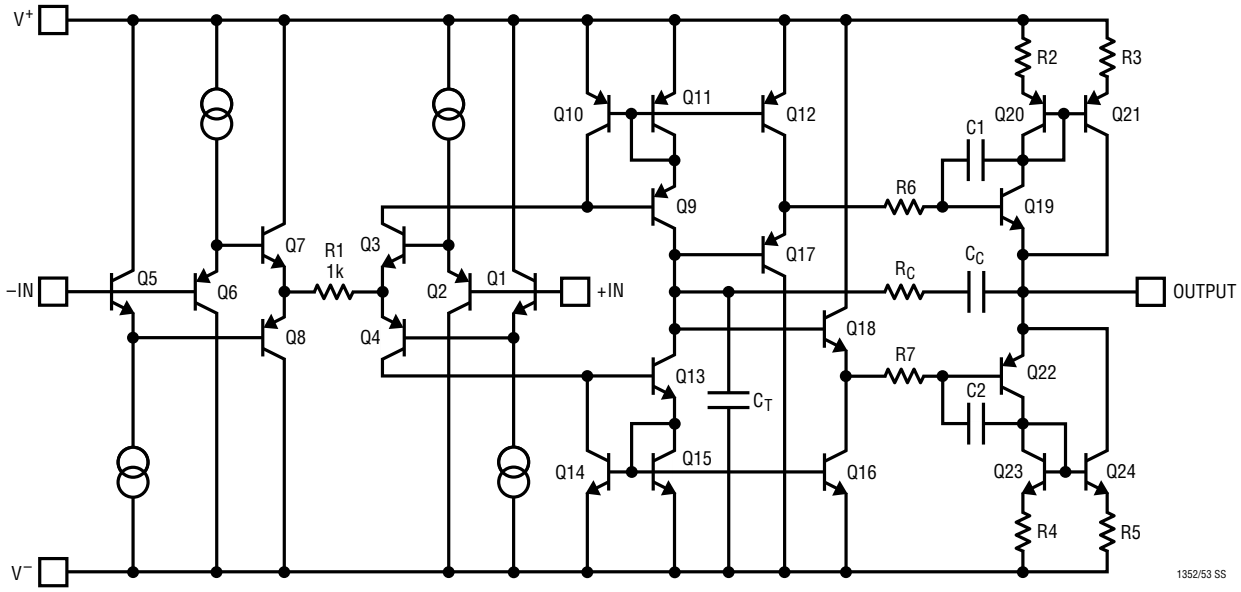

APPLICATIONS INFORMATION

Layout and Passive Components

The LT1352/LT1353 amplifiers are easy to use and tolerant of less than ideal layouts. For maximum performance (for example, fast 0.01% settling) use a ground plane, short lead lengths and RF-quality bypass capacitors (0.01μF to 0.1μF). For high drive current applications use low ESR bypass capacitors (1μF to 10μF tantalum).

The parallel combination of the feedback resistor and gain setting resistor on the inverting input combine with the input capacitance to form a pole which can cause peaking or even oscillations. If feedback resistors greater than 10k are used, a parallel capacitor of value, $C_F > (R_G)(C_{IN}/R_F)$, should be used to cancel the input pole and optimize dynamic performance. For unity-gain applications such as current-to-voltage converter where a large feedback resistor is used, C_F should be greater than or equal to C_{IN}.

Capacitive Loading

The LT1352/LT1353 are stable with any capacitive load. As the capacitive load increases, both the bandwidth and phase margin decrease so there will be peaking in the frequency domain and in the transient response.

Circuit Operation

The LT1352/LT1353 circuit topology is a true voltage feedback amplifier that has the slewing behavior of a current feedback amplifier. The operation of the circuit can be understood by referring to the Simplified Schematic. The inputs are buffered by complementary NPN and PNP emitter followers which drive a 1k resistor. The input voltage appears across the resistor generating currents which are mirrored into the high impedance node and compensation capacitor C_T. Complementary followers form an output stage which buffers the gain node from the load. The output devices Q19 and Q22 are connected to form a composite PNP and a composite NPN. Capacitive load compensation is provided by R_C and C_C. The bandwidth is set by the input resistor and the capacitance on the high impedance node. The slew rate is determined by the current available to charge the gain node capacitance. This current is the differential input voltage divided by R1, so the slew rate is proportional to the input. Highest slew rates are therefore seen in the lowest gain configurations. For example, a 10V output step in a gain of 10 has only a 1V input step whereas the same output step in unity-gain has a 10 times greater input step. In higher gain configurations the large-signal performance becomes the same as the small-signal performance with both responses looking like a 1-pole lowpass filter.

Power Dissipation

The LT1352/LT1353 combine high speed and large output drive in small packages. Because of the wide supply voltage range, it is possible to exceed the maximum junction temperature of 150°C under certain conditions. Maximum junction temperature T_J is calculated from the ambient temperature T_A and power dissipation P_D as follows:

LT1352CN8: $T_J = T_A + (P_D)(130°C/W)$
LT1352CS8: $T_J = T_A + (P_D)(190°C/W)$
LT1353CS: $T_J = T_A + (P_D)(150°C/W)$

Worst-case power dissipation occurs at the maximum supply current and when the output voltage is at 1/2 of either supply voltage (or the maximum swing if less than 1/2 supply voltage). For each amplifier $P_{D(MAX)}$ is:

$$P_{D(MAX)} = (V^+ - V^-)(I_{S(MAX)}) + (V^+/2)^2/R_L$$

Example: LT1353 in S14 at 85°C, $V_S = \pm 15V$, $R_L = 500\Omega$, $V_{OUT} = \pm 2.5V$ ($\pm 5mA$)

$$P_{D(MAX)} = (30V)(380\mu A) + (15V - 2.5V)(5mA) = 74mW$$

$$T_J = 85°C + (4)(74mW)(150°C/W) = 129°C$$

TYPICAL APPLICATIONS

DAC Current-to-Voltage Converter

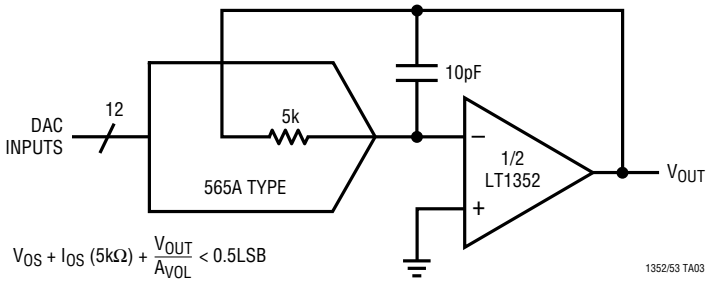

$V_{OS} + I_{OS}(5k\Omega) + \frac{V_{OUT}}{A_{VOL}} < 0.5LSB$

20kHz, 4th Order Butterworth Filter

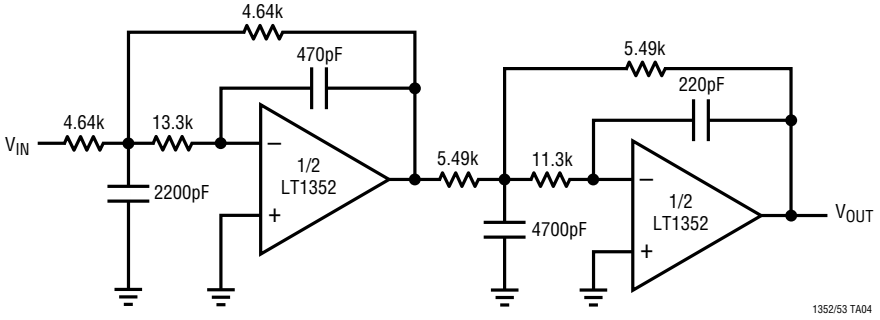

400kHz Photodiode Preamp with 10kHz Highpass Loop

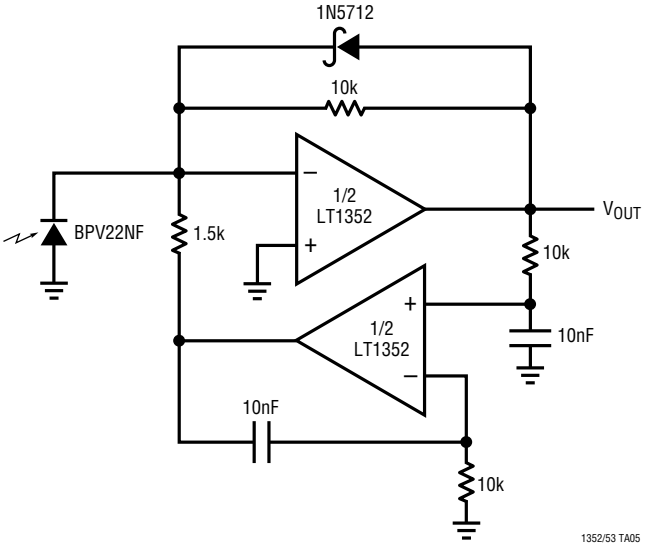

PACKAGE DESCRIPTION Dimension in inches (millimeters) unless otherwise noted.

N8 Package
8-Lead PDIP (Narrow 0.300)
(LTC DWG # 05-08-1510)

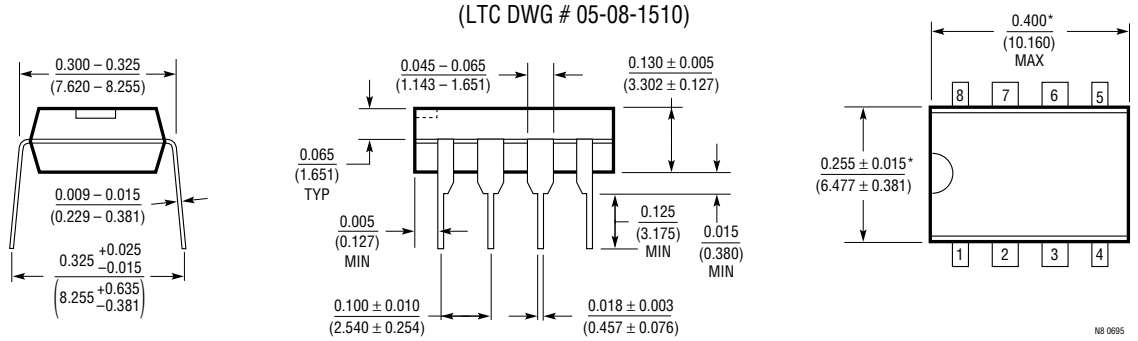

*THESE DIMENSIONS DO NOT INCLUDE MOLD FLASH OR PROTRUSIONS.
MOLD FLASH OR PROTRUSIONS SHALL NOT EXCEED 0.010 INCH (0.254mm)

S8 Package
8-Lead Plastic Small Outline (Narrow 0.150)
(LTC DWG # 05-08-1610)

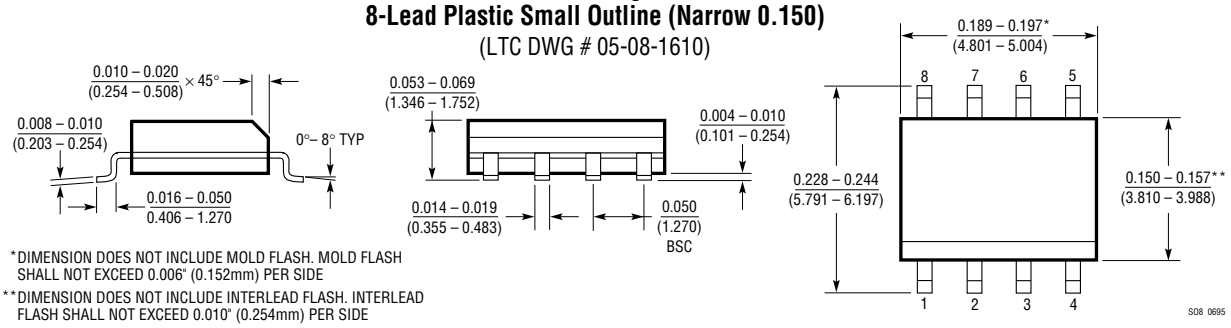

*DIMENSION DOES NOT INCLUDE MOLD FLASH. MOLD FLASH SHALL NOT EXCEED 0.006" (0.152mm) PER SIDE
**DIMENSION DOES NOT INCLUDE INTERLEAD FLASH. INTERLEAD FLASH SHALL NOT EXCEED 0.010" (0.254mm) PER SIDE

S Package
14-Lead Plastic Small Outline (Narrow 0.150)
(LTC DWG # 05-08-1610)

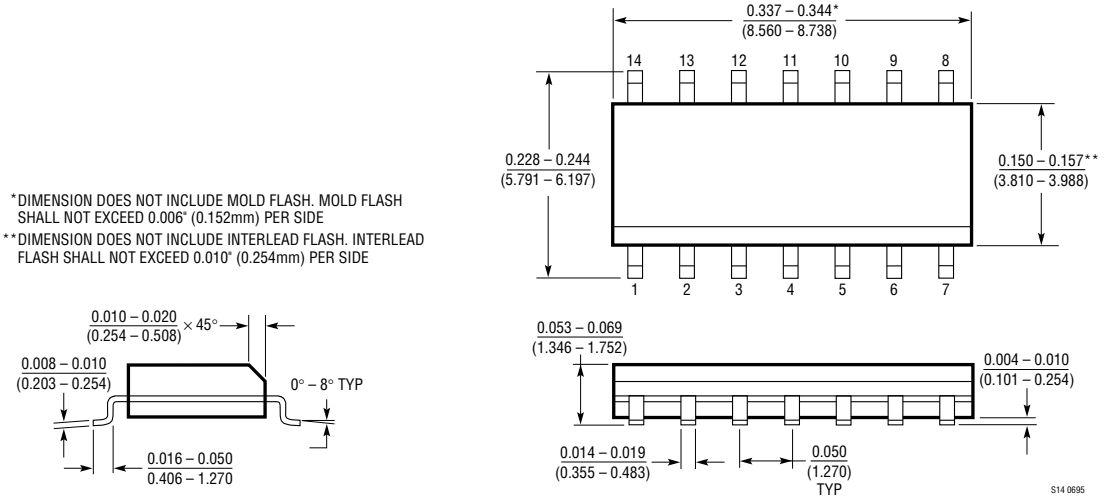

*DIMENSION DOES NOT INCLUDE MOLD FLASH. MOLD FLASH SHALL NOT EXCEED 0.006" (0.152mm) PER SIDE
**DIMENSION DOES NOT INCLUDE INTERLEAD FLASH. INTERLEAD FLASH SHALL NOT EXCEED 0.010" (0.254mm) PER SIDE

RELATED PARTS

PART NUMBER	DESCRIPTION	COMMENTS
LT1354	12MHz, 400V/µs Op Amp	High Slew Rate, Wide Bandwidth, C-Load Drive, Low Power
LT1355/LT1356	Dual/Quad 12MHz, 400V/µs Op Amps	High Slew Rate, Wide Bandwidth, 1.2mA Max Supply Current per Op Amp, C-Load Drive