ADJUSTABLE 3-TERMINAL POSITIVE VOLTAGE REGULATOR

■ GENERAL DESCRIPTION

The NJM317 is adjustable 3-terminal positive voltage regulator IC. It is capable of adjustment from typical 1.25V to 37V output voltage range with two resistors. It is capable of supplying in excess of 1.5A with heat sink.

The NJM317 is suitable for the power supply of VCR, CD player and others.

■ FEATURES

- Operating Voltage (+4.25V～+40V)
- Adjustable Output Down to 1.2V
- Guarantee'd 1.5A Output Current
- Line Regulation typically (0.01%/V)
- Load Regulation typically (0.1%)
- 80dB Ripple Rejection
- Package Outline TO-220F
- Bipolar Technology

■ PACKAGE OUTLINE

(TO-220F)

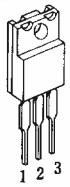

1. Adjustment
2. Output
3. Input

■ EQUIVALENT CIRCUIT

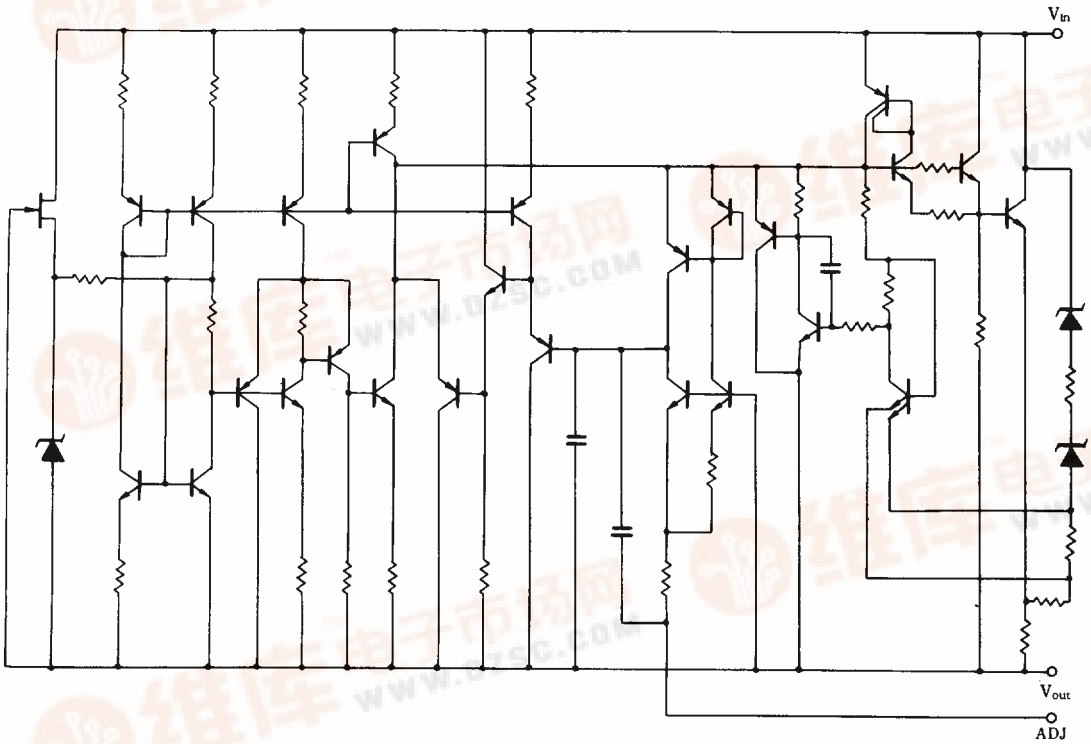

■ ABSOLUTE MAXIMUM RATINGS

(Ta=25°C)

PARAMETER	SYMBOL	RATINGS	UNIT
Input-Output Differential Voltage	V_{IN}-V_O	40	V
Power Dissipation	P_D	16 (Tc≦70℃)	W
Operating Temperature Range (Junction)	T_{opr} (j)	−30～+150	℃
(Ambient)	T_{opr} (a)	−30～+85	℃
Storage Temperature Range	T_{stg}	−50～+150	℃

■ THERMAL CHARACTERISTICS

Terminal Resistance	Junction-To-Ambient	θ ja	60	℃/W
	Junction-To-Case	θ jc	5	

■ ELECTRICAL CHARACTERISTICS (V_{IN}-V_O=5V. I_O=500mA. C_{IN} =0.1 μF, C_O=1 μF. T_j=25℃. Pules Measurement.)

PARAMETER	SYMBOL	TEST CONDITION	MIN.	TYP.	MAX.	UNIT
Reference Voltage	V_{REF}		1.2	1.25	1.3	V
	$V_{REF}-V_{IN}$	3V≦($V_{IN}-V_O$)≦40V, I_O=100mA	1.2	1.25	1.3	V
	$V_{REF}-I_O$	10mA≦I_O≦1.5A	1.2	1.25	1.3	V
Reference Voltage Thermal Change	$\Delta V_{REF}-T$	0≦T_j≦125℃	—	5	—	mV
Adjustment Pin Current	I_{ADJ}		—	50	100	μA
Adjustment Pin Current Change	$\Delta I_{ADJ}-V_{IN}$	3V≦($V_{IN}-V_O$)≦40V, I_O=100mA	—	0.2	5	μA
	$\Delta I_{ADJ}-I_O$	10mA≦I_O≦1.5A	—	0.2	5	μA
Line Regulation	ΔV_O-V_{IN}	3V≦($V_{IN}-V_O$)≦40V, I_O=100mA	—	0.01	0.04	%/V
Load Regulation	ΔV_O-I_O	10mA≦I_O≦1.5A, V_O≦5V	—	5	25	mV
		V_O>5V	—	0.1	0.5	%
Minimum Load Current	$I_{O(MIN)}$	($V_{IN}-V_O$)=40V	—	3.5	10	mA
Peak Output Current	$I_{O(PEAK)}$	5V≦($V_{IN}-V_O$)≦15V	1.5	2.2	—	A
		($V_{IN}-V_O$)=40V	0.15	0.4	—	A
RMS Output Noise Voltage	V_{NO}	10Hz≦f≦10kHz	—	0.001	—	%/V_O
Ripple Rejection Ratio	RR	(V_O=10V, f=120Hz, ΔV_{IN}=1V_{rms}), C_{ADJ}=0		65		dB
		(V_O=10V, f=120Hz, ΔV_{IN}=1V_{rms}), C_{ADJ}=10μF	66	80		dB

■ TEST CIRCUIT

1) (Reference Voltage Thermal Change), (Adjustment Pin Current Change), (Line Regulation), (Load Regulation), (Peak Output Current), (RMS Output Noise Current)

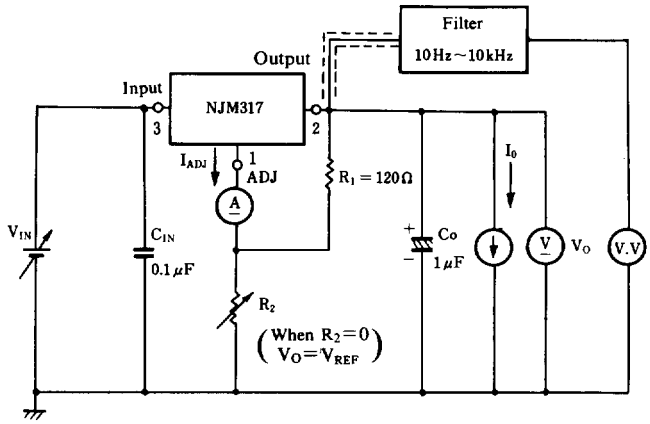

2) Minimum Load Current

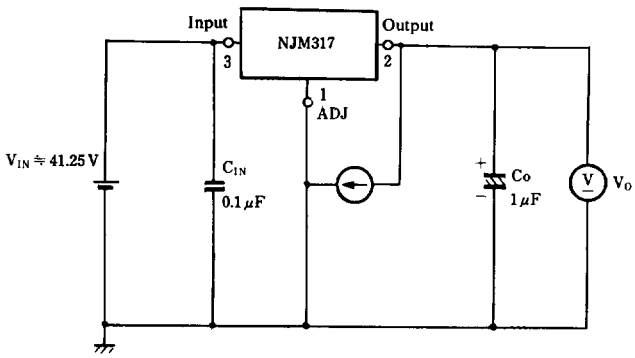

I_{OMIN}: Minimum I_O for
$V_O = V_{REF}$(Typical 1.25V)
($V_{IN} = 40 + V_{REF}$)

3) Ripple Rejection

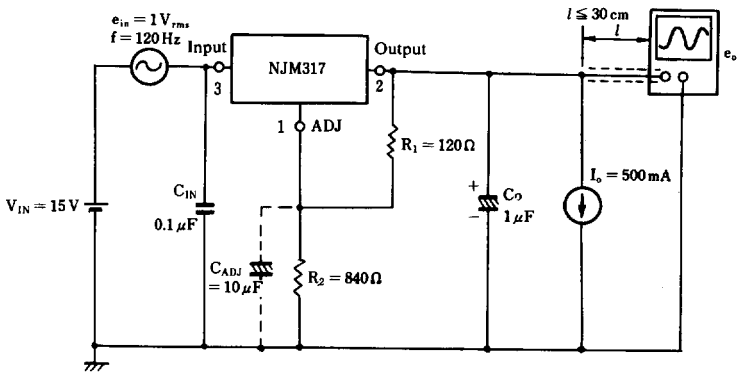

Ripple Rejection $= 20 \log_{10}\left(\frac{e_{IN}}{e_O}\right)$ [dB]

■ TYPICAL APPLICATIONS

1). $V_O = 1.25V \sim 37V$ Adjustable Voltage Regulator

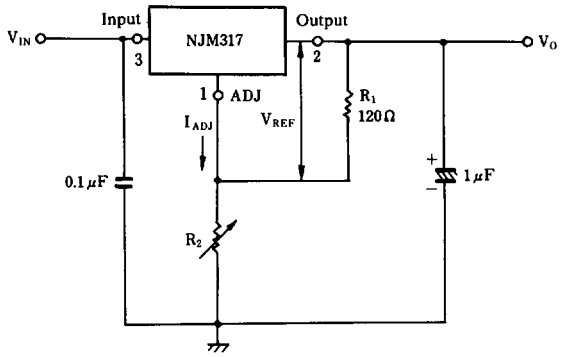

$$V_O = V_{REF} \times \left(1 + \frac{R_2}{R_1}\right) + R_2 \times I_{ADJ}$$

2) Selected Output Voltage

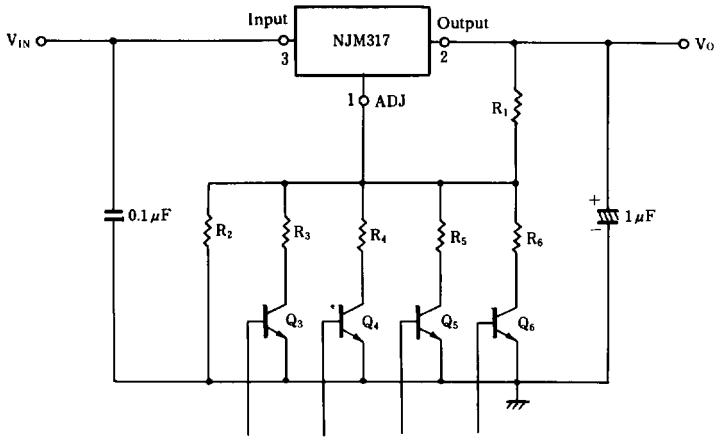

Selective Signal Inputs

The transistors Q_3 are switched by selective signal inputs and the output voltage V_O is controlled by the transistor on or off.

(Example)

When all transisitor is off,

$$V_O \fallingdotseq V_{REF} \times (1 + \frac{R_2}{R_1})$$

When the transistor Q3 is on, and others are off.

$$V_O \fallingdotseq V_{REF} \times \{1 + \frac{R_2 \times R_3}{(R_2 + R_3) \times R_1}\}$$

※ I_{ADJ} ignore.

3). Regulater with Protection Diodes

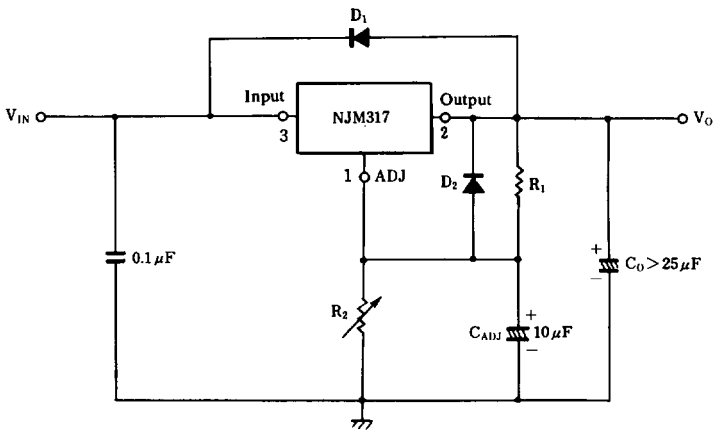

D_1 protects about Co
D_2 protects about C_{ADJ}

4) Constant Current Regulator

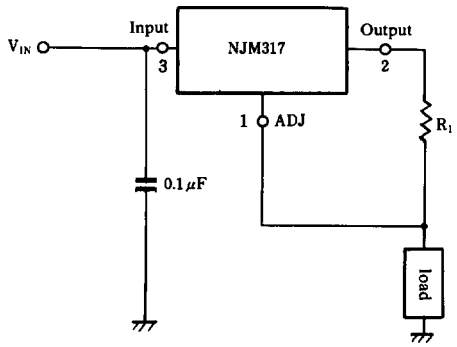

$R_1 \leqq 125\Omega$

$10mA \leqq I_0 \leqq 1.5A$

$I_0 = \frac{V_{REF}}{R_1}$

■ TYPICAL CHARACTERISTICS

Minimum Load Current

(Ta=25°C, V_{OUT}=1.25(V_{REF}))

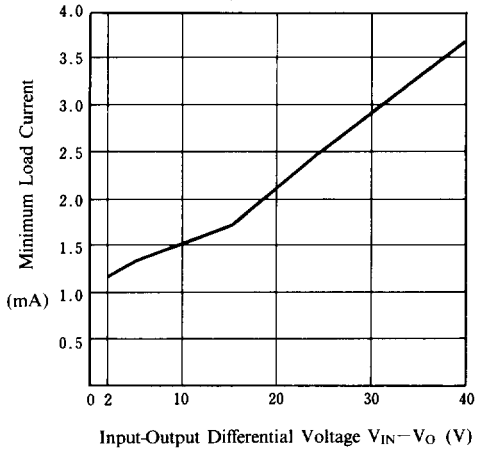

Peak Output Current vs. Input-Output Differential Voltage

(Ta=25°C)

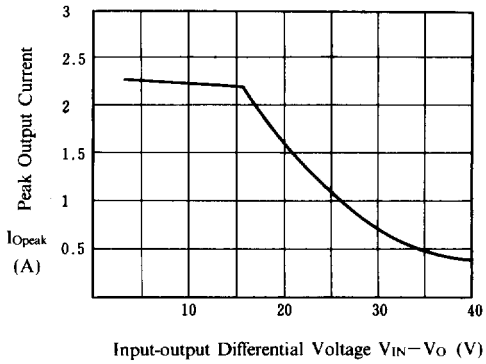

Output Voltage vs. Input Voltage.

(Ta=25°C)

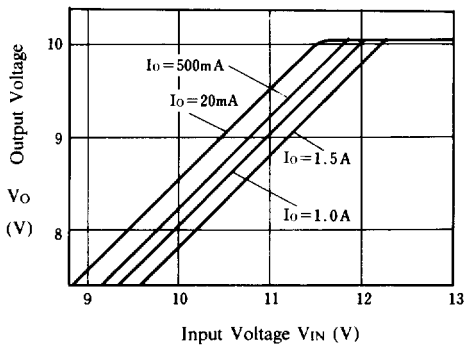

Ripple Rejection vs. Frequency

(V_{IN}=15V, V_O=10V, e_{in}=1Vrms, I_O=500mA, Ta=25°C)

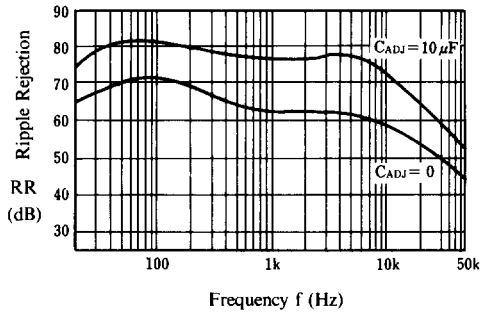

Ripple Rejection vs. Output Voltage

(V_{IN}−V_O=5V, e_{in}=1Vrms, f=120Hz, I_O=500mA, Ta=25°C)

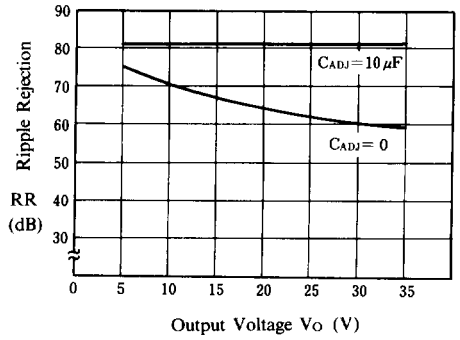

Ripple Rejection vs. Output Current

(V_{IN}=15V, V_O=10V, f=120Hz, e_{in}=1Vrms, Ta=25°C)

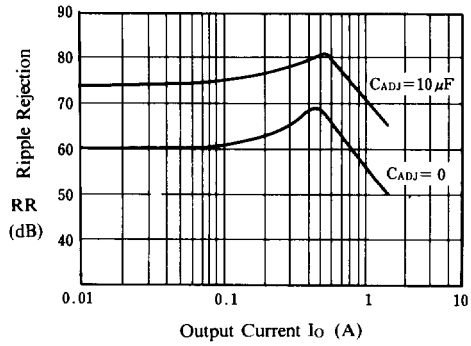

■ TYPICAL CHARACTERISTICS

Reference Voltage vs. Temperature

($V_{IN}-V_O=5V$, $I_O=500nA$, Pulse Test)

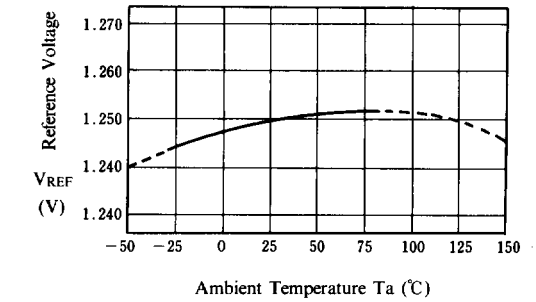

Adjustment Pin Current vs. Temperature

($V_{IN}-V_O=5V$, $I_O=500mA$)

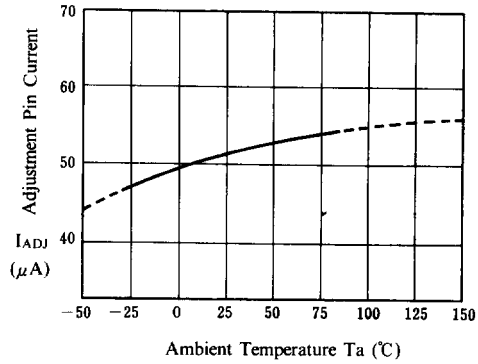

Line Regulation vs. Temperature

($V_{IN}=8V\sim45V$, $V_O=5V$, $I_O=100mA$, Pulse Test)

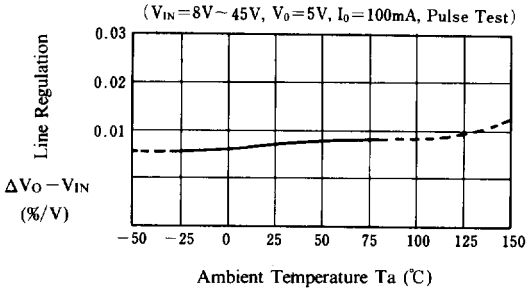

Load Regulation vs. Temperature

($V_{IN}=15V$, $V_O=10V$, Pulse Test)

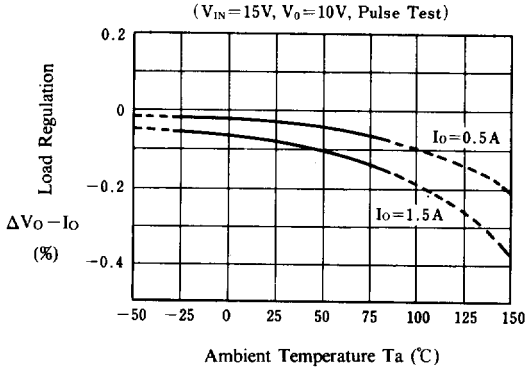

Thermal Shutdown

($V_{IN}=15V$, $V_O=10V$, $I_O=0\ mA$)