DS2755

High-Accuracy Battery Fuel Gauge with Snapshot

www.maxim-ic.com

FEATURES

- Snapshot Mode Allows Instantaneous Power Measurement
- Accurate Current Measurement for Coulomb Counting (Current Accumulation)
  - 2% ±4μV over ±64mV Input Range
  - 2% ±200μA over ±3.2A Range Using a 20mΩ Sense Resistor
- Current Measurement
  - 9-Bit Bidirectional Snapshot Measurement
  - 12-Bit Bidirectional Average Updated Every 88ms
  - 15-Bit Bidirectional Average Updated Every 2.8s
- Voltage Measurement
  - 9-Bit Snapshot Measurement
  - 10-Bit Measurement Updated Every 4ms
- Temperature Measurement
  - 10-Bit Measurement, 0.125°C Resolution Using Integrated Sensor
- Host Alerted When Accumulated Current or Temperature Exceeds User-Selectable Limits
- 96 Bytes of Lockable EEPROM
- 8 Bytes of General-Purpose SRAM
- Dallas 1-Wire® Interface with Unique 64-Bit Device Address with Standard 16kbps or Overdrive 142kbps Timing
- 3mm Dimension of 8-Pin TSSOP Package Allows Mounting on Side of Thin Prismatic Li+ and Li+/Polymer Cells

APPLICATIONS

Cell Phones
Digital Cameras
Smartphones
PDAs
Portable Consumer Products

PIN CONFIGURATION

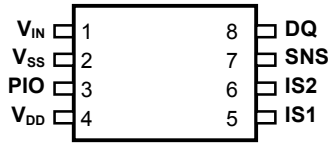

DS2755E
8-Pin TSSOP Package

DESCRIPTION

The DS2755 high-precision battery fuel gauge is a data-acquisition and information-storage device tailored for cost-sensitive and space-constrained 1-cell Li+/polymer battery-pack applications. The DS2755 provides the key hardware components required to accurately estimate remaining capacity by integrating low-power, precision measurements of temperature, voltage, current, and current accumulation, as well as nonvolatile (NV) data storage, into the small footprint of a 3.0mm x 4.4mm 8-pin TSSOP package.

Through its 1-Wire interface, the DS2755 gives the host system read/write access to status and control registers, instrumentation registers, and general-purpose data storage. Each device has a unique factory-programmed 64-bit net address that allows it to be individually addressed by the host system, supporting multibattery operation.

ORDERING INFORMATION

PART	MARKING	TEMP RANGE	DESCRIPTION
DS2755E+	2755	-20°C to +70°C	8-Pin TSSOP, Lead Free
DS2755E+T&R	2755	-20°C to +70°C	DS2755E+ on Tape-and-Reel

1-Wire is a registered trademark of Dallas Semiconductor.

Note: *Some revisions of this device may incorporate deviations from published specifications known as errata. Multiple revisions of any device may be simultaneously available through various sales channels. For information about device errata, click here: www.maxim-ic.com/errata.*

DESCRIPTION (CONTINUED)

The DS2755 performs temperature, voltage, and current measurement to a resolution sufficient to support process-monitoring applications such as battery charge control and remaining capacity estimation. Temperature is measured using an on-chip sensor, eliminating the need for a separate thermistor. Bidirectional current measurement supporting current accumulation (coulomb counting) is accomplished using an external current sense resistor.

The host system can configure the DS2755 to signal critical conditions to reduce polling overhead. The interrupt fires when programmable upper and lower thresholds of temperature or coulomb count are crossed. The user can select either the DQ pin or PIO pin as the interrupt signal.

The programmable I/O pin allows the host system to sense and control other electronics in the pack, including switches, vibration motors, speakers, and LEDs, or the I/O pin can be configured as an interrupt output.

Three types of memory are provided on the DS2755 for battery information storage: EEPROM, lockable EEPROM, and SRAM. EEPROM memory saves important battery data in true NV memory that is unaffected by severe battery depletion, accidental shorts, or ESD events. Lockable EEPROM becomes ROM when locked to provide additional security for unchanging battery data. SRAM provides inexpensive storage for temporary data.

Figure 1. **APPLICATION EXAMPLE**

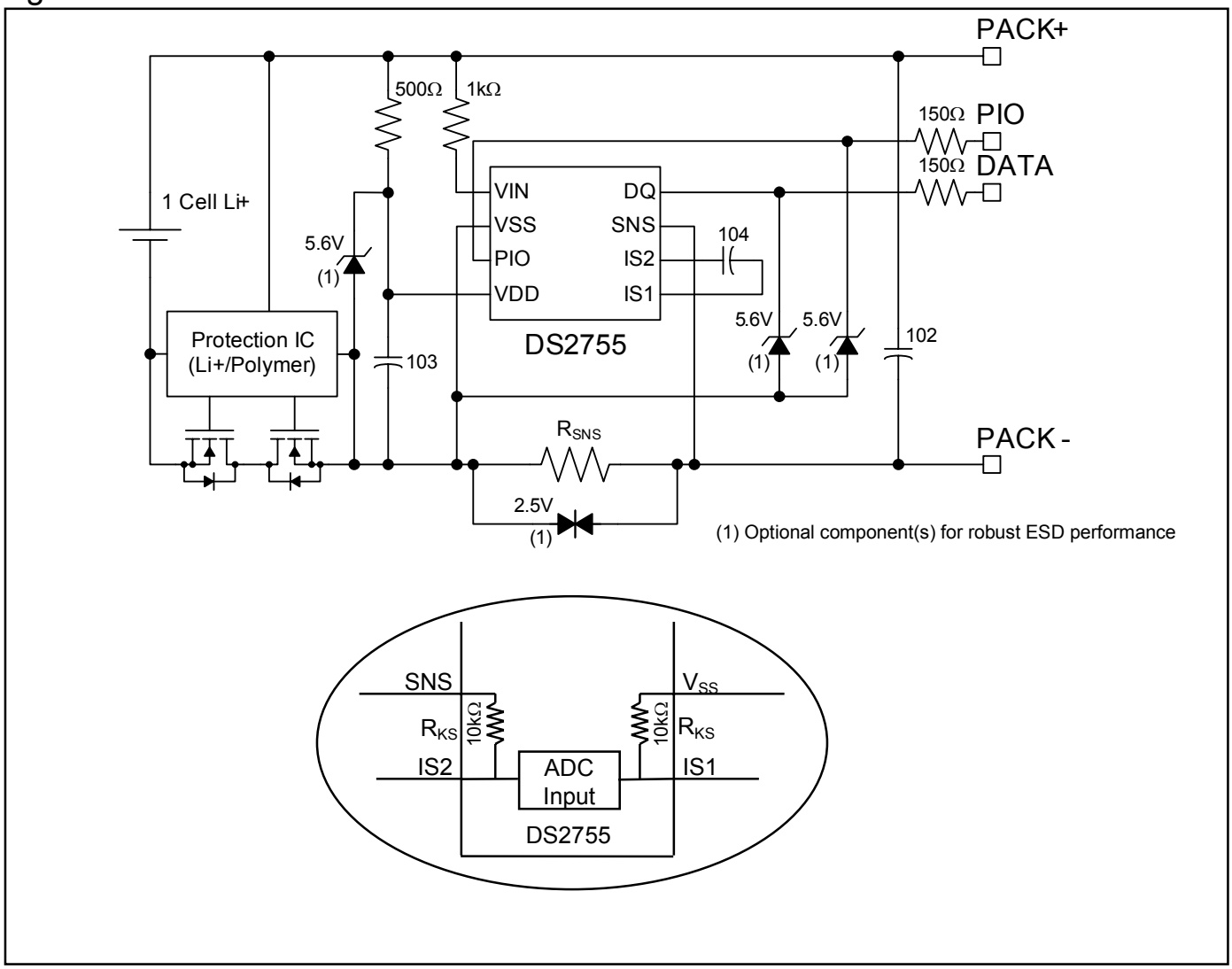

ABSOLUTE MAXIMUM RATINGS*

Voltage on PIO Pin, Relative to V_{SS}	-0.3V to +12V
Voltage on All Other Pins, Relative to V_{SS}	-0.3V to +6V
Continuous Sink Current, DQ, PIO	12mA
Operating Temperature Range	-40°C to +85°C
Storage Temperature Range	-55°C to +125°C
Soldering Temperature	See J-STD-020 Specification

** This is a stress rating only and functional operation of the device at these or any other conditions above those indicated in the operation sections of this specification is not implied. Exposure to absolute maximum rating conditions for extended periods of time may affect reliability.*

RECOMMENDED DC OPERATING CONDITIONS

($2.5V \le V_{DD} \le 5.5V$, T_A = -20°C to +70°C.)

PARAMETER	SYMBOL	CONDITIONS	MIN	TYP	MAX	UNITS
Supply Voltage	V_{DD}	(Note 1)	2.5		5.5	V
Data Pin	DQ	(Note 1)	-0.3		+5.5	V
V_{IN} Pin	V_{IN}	(Note 1)	-0.3		+5.5	V

DC ELECTRICAL CHARACTERISTICS

($2.5V \le V_{DD} \le 5.5V$, T_A = -20°C to +70°C.)

PARAMETER	SYMBOL	CONDITIONS	MIN	TYP	MAX	UNITS
Active Current	I_{ACTIVE}	DQ = V_{DD}, EEC bit = 0, 0°C to +50°C, 2.5V < V_{DD} < 4.2V		75	100	µA
		DQ = V_{DD}, EEC bit = 0			110	
Sleep-Mode Current	I_{SLEEP}	DQ = 0V (Note 3)		1	2	µA
Current Measurement Input Range	$V_{IS1-IS2}$	(Note 2)	±64			mV
Current Register Offset Error	I_{OERR}	(Note 5)			±7.813	µV
Current Gain Error	I_{GERR}	(Note 2, 6)			±1	%I reading
24 Hour Accumulated Current Error	q_{CA}	$V_{IS1-IS2}$ = 0, OBEN set, (Note 2, 7, 4)	-200	-100	0	µVhr
Current Sampling Frequency	f_{SAMP}			1456		Hz
IS1-VSS, IS2-SNS Filter Resistors	R_{KS}	+25°C		10		kΩ
Input Resistance: V_{IN}	R_{IN}	$V_{IN} = V_{DD}$	5			MΩ
Voltage Offset Error	V_{OERR}	(Note 8)			±5	mV
Voltage Gain Error	V_{GERR}				±2	%V reading
Temperature Error	T_{ERR}	(Note 9)			±3	°C
Input Logic High: DQ, PIO	V_{IH}	(Note 1)	1.5			V
Input Logic Low: DQ, PIO	V_{IL}	(Note 1)			0.4	V
Output Logic Low: DQ, PIO	V_{OL}	I_{OL} = 4mA (Note 1)			0.4	V
DQ Pulldown Current	I_{PD}			1		µA
DQ Capacitance	C_{DQ}				60	pF
DQ Low-to-Sleep Time	t_{SLEEP}		2.1			s
Undervoltage Detect	V_{UV}	(Note 1)	2.45	2.5	2.55	V
Undervoltage Delay	t_{UVD}		90	100	110	ms
Internal Timebase Accuracy	t_{ERR}	0°C to +50°C (Note 10)		±1	±2	%
		-20°C to +70°C			±3	

ELECTRICAL CHARACTERISTICS—1-WIRE INTERFACE

($2.5V \le V_{DD} \le 5.5V$, T_A = -20°C to +70°C.)

PARAMETER	SYMBOL	CONDITIONS	MIN	TYP	MAX	UNITS
Snapshot Trigger 0	t_{SWL}		1		16	µs
Snapshot Delay	t_{SDLY}		80	100	120	µs
STANDARD TIMING						
Time Slot	t_{SLOT}		60		120	µs
Recovery Time	t_{REC}		1			µs
Write-0 Low Time	t_{LOW0}		60		119	µs
Write-1 Low Time	t_{LOW1}		1		15	µs
Read Data Valid	t_{RDV}				15	µs
Reset Time High	t_{RSTH}		480			µs
Reset Time Low	t_{RSTL}		480		960	µs
Presence-Detect High	t_{PDH}		15		60	µs
Presence-Detect Low	t_{PDL}		60		240	µs
Interrupt Time Low	t_{IL}		480		1920	µs
OVERDRIVE TIMING						
Time Slot	t_{SLOT}		6		16	µs
Recovery Time	t_{REC}		1			µs
Write-0 Low Time	t_{LOW0}		6		16	µs
Write-1 Low Time	t_{LOW1}		1		2	µs
Read Data Valid	t_{RDV}				2	µs
Reset Time High	t_{RSTH}		48			µs
Reset Time Low	t_{RSTL}		48		80	µs
Presence-Detect High	t_{PDH}		2		6	µs
Presence-Detect Low	t_{PDL}		8		24	µs
Interrupt Time Low	t_{IL}		48		192	µs

EEPROM RELIABILITY SPECIFICATION

($2.5V \le V_{DD} \le 5.5V$, T_A = -20°C to +70°C.)

PARAMETER	SYMBOL	CONDITIONS	MIN	TYP	MAX	UNITS
Copy to EEPROM Time	t_{EEC}			2	10	ms
EEPROM Copy Endurance	N_{EEC}	(Note 11)	50,000			cycles

Note 1: All voltages are referenced to V_{SS}.
Note 2: Specifications relative to V_{IS1} - V_{IS2}.
Note 3: The DS2755 requires a maximum of 25µAH of charge to transition into sleep mode.
Note 4: Summation of worst case time base and current measurement sampling errors.
Note 5: Continuous offset cancellation corrects offset errors in the current measurement system. Individual values reported by the Current register have a maximum offset of ±0.5 LSb's (±7.8125µV). Individual values reported in the Average Current register have a maximum offset of ±2 LSb's (±7.8125µV).
Note 6: Current Gain Error specifies the gain error in the Current register value compared to a reference voltage between IS1 and IS2. The DS2755 does not compensate for sense resistor characteristics, and any error terms arising from the sense resistor should be taken into account when calculating total current measurement error.
Note 7: Achieving the 24 Hour Accumulated Current Error assumes positive offset accumulation blanking is enabled (OBEN bit set) and can require a one time 3.5s in-system calibration after mounting to the printed circuit board. Variations in temperature and supply voltage are compensated for by periodic offset corrections performed automatically during *Active* mode operation.
Note 8: Voltage offset measurement is with respect to 4.2V at +25°C.
Note 9: Self heating due to output pin loading and sense resistor power dissipation can alter the Temperature reading from ambient conditions.
Note 10: Typical value for t_{ERR} valid at 3.7V and +25°C. t_{ERR} applies to all internal timings (ex. f_{SAMP}, t_{SLEEP}, t_{UVD}) except for the 1-Wire Interface timings.
Note 11: Four year data retention at +50°C.

Figure 2. **FUNCTIONAL DIAGRAM**

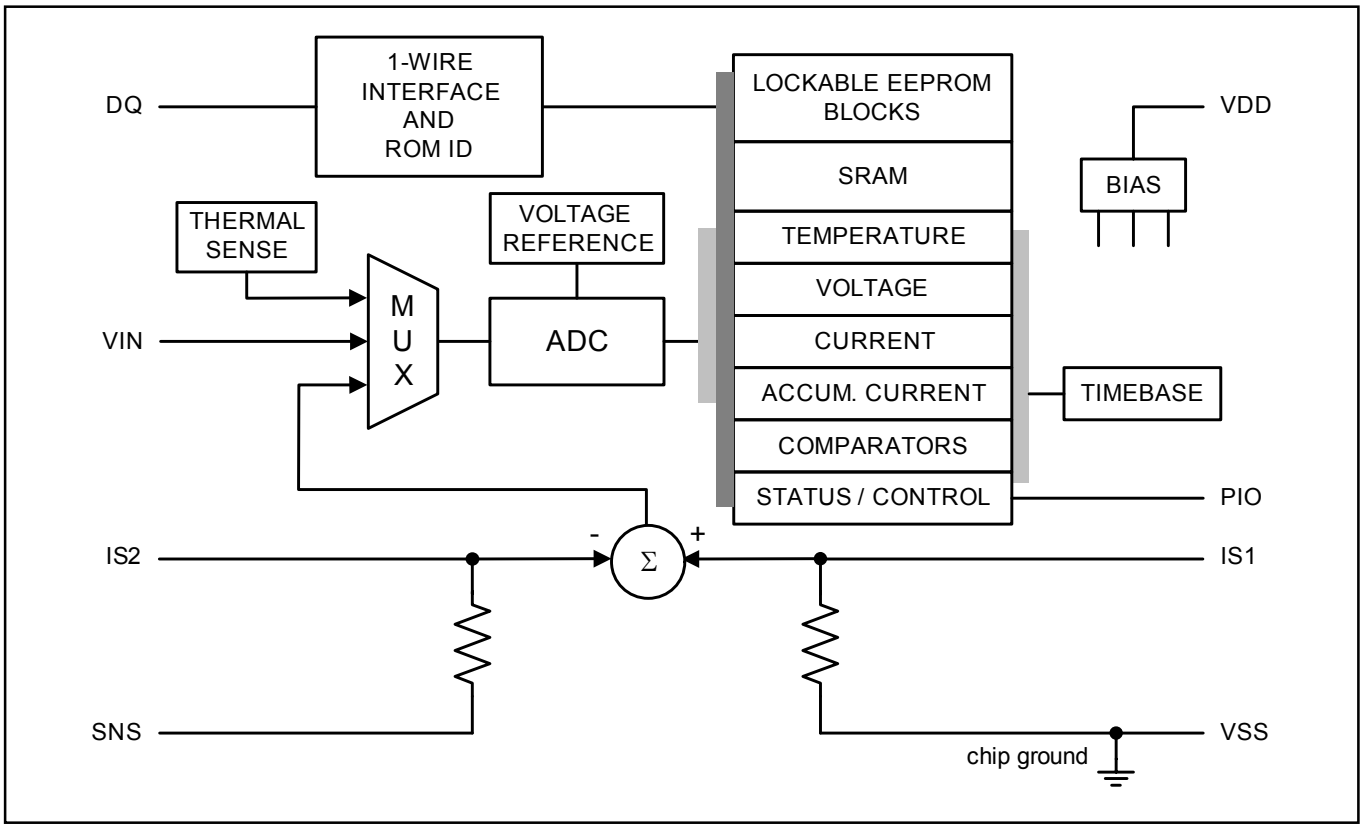

DETAILED PIN DESCRIPTION

PIN	NAME	DESCRIPTION
1	VIN	Battery voltage sense input. Voltage measurement performed on VIN input and displayed in Voltage Register.
2	VSS	Device ground and current sense resistor connection. VSS attaches to battery end of sense resistor.
3	PIO	General purpose programmable I/O pin or optional interrupt output.
4	VDD	Input supply: +2.5V to +5.5V input range. Bypass VDD to VSS with 0.1μF.
5	IS1	Current sense filter input 1
6	IS2	Current sense filter input 2
7	SNS	Sense resistor connection. SNS attaches to pack end of current sense resistor.
8	DQ	Serial interface data I/O pin. Bidirection data transmit and receive at 16kbps or 143kbps. Optional interrupt output.

POWER MODES

The DS2755 has two power modes: *Active* and *Sleep*. While in *Active* mode, the DS2755 continuously measures current, voltage and temperature. Current accumulation and monitoring for under voltage also occur continuously in *Active* mode. In *Sleep* mode, the DS2755 ceases these activities. The DS2755 enters *Sleep* mode when PMOD = 1 **AND** either of the following occur:

- the DQ line is low for longer than t_{SLEEP} (minimum 2.1s)
  (DQ low used indicate that the pack has been disconnected or that the host system is signaling the DS2755 to enter *Sleep* mode.)

the UVEN bit in the Status Register is set to 1 **AND** the voltage on V_{IN} drops below undervoltage threshold V_{UV} for t_{UVD}

The DS2755 returns to *Active* mode when the DQ line is pulled from a low-to-high state and the voltage on V_{IN} is above V_{UV}. The factory default for the DS2755 is UVEN = PMOD = 0. The DS2755 defaults to *Active* mode when power is first applied.

CURRENT MEASUREMENT AND ACCUMULATION

The DS2755 current measurement system is designed to provide timely data on charge and discharge current at a moderate resolution level while simultaneously accumulating high resolution average data to support accurate coulomb counting. Current is measured with an Analog-to-Digital Converter (ADC) by sampling the voltage drop across a series sense resistor, R_{SNS}, connected between SNS and VSS. Individual current samples are taken every 687µs (1456^{-1} Hz). Multiple samples are averaged to report Current and Average Current values, and accumulated for coulomb counting.

Current Measurement

The voltage signal developed across the sense resistor (between SNS and VSS) is differentially sampled by the ADC inputs via internal 10kΩ resistors connected between VSS and IS1, and SNS and IS2. Isolating the ADC inputs (IS1 and IS2 pins) from the sense resistor with 10kΩ facilitates the use of an RC filter by adding a single external capacitor. The RC filter extends the input range beyond ±64mV in pulse load or pulse charge applications. The ADC accurately measures large peak signals as long as the differential signal level at IS1 and IS2 does not exceed ±64mV.

The Current register operates in two modes, normal and snapshot. In normal mode, the Current register reports the average of 128 individual current samples every 88ms. The reported value represents the average current during the 88ms measurement period. The Average Current register reports the average of 4096 current samples and is updated every 2.8s.

In snapshot mode, the Current register holds the current measured immediately following the snapshot trigger. Current measurements resume immediately after the snapshot value is obtained, however, the SNAP bit must be cleared to re-enable normal mode current reporting in the Current register. The Average Current register continues to be updated while the SNAP bit is set. Current accumulation also continues while SNAP is set. Although a small error is introduced into both the Average Current and Accumulated Current values by the current sample timing discontinuity introduced with each trigger of the Snapshot mode, use of Snapshot once every 5s does not produce a significant error.

The following register formats specify the update interval and units for the Current and Average Current registers. Values are posted in two's compliment format. Positive values represent charge currents ($V_{IS1} > V_{IS2}$) and negative values represent discharge currents ($V_{IS2} > V_{IS1}$). Positive currents above the maximum register value are reported at the maximum value, 0x7FFF. Negative currents below the minimum register value are reported at the minimum value, 0x8000.

Figure 3. **CURRENT REGISTER FORMAT**

DS2755: 12-bit + sign resolution (13-bit), 88ms update interval

MSB—Address 0E

S	2^{11}	2^{10}	2^9	2^8	2^7	2^6	2^5

MSb LSb

LSB—Address 0F

2^4	2^3	2^2	2^1	2^0	X	X	X

MSb LSb

"S": sign bit(s)

Units: 2^0 = 15.625µV/Rsns

Figure 4. **AVERAGE CURRENT REGISTER FORMAT**

DS2755: 15-bit + sign resolution (16-bit), 2.8s update interval

MSB—Address 1A

S	2^{14}	2^{13}	2^{12}	2^{11}	2^{10}	2^{9}	2^{8}

MSb LSb

LSB—Address 1B

2^{7}	2^{6}	2^{5}	2^{4}	2^{3}	2^{2}	2^{1}	2^{0}

MSb LSb

"S": sign bit(s)

Units: 2^0 = 1.953µV/Rsns

Current Offset Correction

Continuous offset cancellation is performed automatically to correct for offsets in the current measurement system. Individual values reported by the Current register have a maximum offset of ±0.5 LSb's (±7.8125µV). Individual values reported in the Average Current register have a maximum offset of ±2 LSb's (±7.8125µV).

Current Accumulation

The DS2755 measures current for coulomb counting purposes, with an accuracy of ±2% ±3.9µV over a range of ±64mV. Using a 20mΩ sense resistor, current accumulation is performed over a range of ±3.2A while measuring standby currents with an accuracy of ±195µA. Current measurements are internally summed, or accumulated, with the results displayed in the Accumulated Current Register (ACR). The accuracy of the ACR is dependent on both the current measurement and the accumulation timebase. The 16-bit ACR has a range of ±204.8mVh with an LSb of 6.25µVh. Accumulation of charge current above the maximum register value is reported at the maximum value; conversely, accumulation of discharge current below the minimum register value is reported at the minimum value.

Read and write access is allowed to the ACR. The ACR must be written MSB first then LSB. Whenever the ACR is written, internal fractional accumulation result bits are cleared. In order to preserve the ACR value in case of power loss, the ACR MSB and LSB are automatically backed up to EEPROM after incrementing or decrementing by 100µVh (5.0mAh for Rsns = 20mΩ). The ACR value is recovered from EEPROM on power-up or by a Recall Data command targeting the ACR register address. A write to the ACR results in an automatic copy of the new value to EEPROM.

Figure 5. **ACCUMULATED CURRENT REGISTER FORMAT**

MSB—Address 10

S	2^{14}	2^{13}	2^{12}	2^{11}	2^{10}	2^{9}	2^{8}

MSb LSb

LSB—Address 11

2^{7}	2^{6}	2^{5}	2^{4}	2^{3}	2^{2}	2^{1}	2^{0}

MSb LSb

Units: 6.25µVh/Rsns

ACR LSB				
V_{IS1}- V_{IS2}	R_{SNS}			
	20mΩ	15mΩ	10mΩ	5mΩ
6.25□Vh	312.5µAh	416.7µAh	625µAh	1.250mAh

ACR RANGE				
V_{IS1}- V_{IS2}	R_{SNS}			
	20mΩ	15mΩ	10mΩ	5mΩ
±204.8mVh	±10.24Ah	±13.65Ah	±20.48Ah	±40.96Ah

Offset Accumulation Blanking

In order to avoid the accumulation of small positive offset errors over long periods, an offset blanking filter is provided. The blanking filter is enabled by setting the OBEN bit in the Status Register. When OBEN is set, charge currents (positive Current register values) less than 62.5μV are not accumulated in the ACR. The minimum charge current accumulated in the ACR is 3.125mA for RSNS=0.020Ω and 12.5mA for RSNS=0.005Ω.

Accumulation Bias

Systematic errors or an application preference can require the application of an arbitrary bias to the current accumulation process. The Accumulation Bias register is provided to allow a user programmed constant positive or negative polarity bias to the current accumulation process. The Accumulation Bias value can be used to estimate battery currents that do not flow through the sense resistor, estimate battery self-discharge, or correct for offset error accumulated in the ACR register. The user programmed two's compliment value in the Accumulation Bias register is added to the ACR once per current sample. The register format supports the accumulation bias to be applied in 1.95μV increments over a ±250μV range. When using a 20mΩ sense resistor, the bias control is 100μA over a ±12.5mA range.

The Accumulation Bias register is directly read and write accessible. The user value is made nonvolatile with a Copy Data command targeting EEPROM block 0. The Accumulation Bias register is loaded from EEPROM memory on power up and a transition from Sleep to Active mode.

Figure 6. **ACCUMULATION BIAS REGISTER FORMAT**

Address 33h

S	2^6	2^5	2^4	2^3	2^2	2^1	2^0

MSb LSb

"S": sign bit 1.95μV/Rsns

VOLTAGE MEASUREMENT

The voltage register operates in two modes, normal and snapshot. In normal mode, the DS2755 continually measures the voltage between pins V_{IN} and V_{SS} over a 0 to 4.75V range, and the Voltage Register is updated in two's-complement format every 3.4ms with a resolution of 4.88mV.

In snapshot mode, the Voltage register holds the voltage measured immediately following the snapshot trigger. Normal voltage measurements resume after the snapshot value is obtained, however, the SNAP bit must be cleared to re-enable normal mode reporting of voltage measurement to the Voltage register.

Voltages above the maximum register value are reported as the maximum value.

Figure 7. **VOLTAGE REGISTER FORMAT**

MSB—Address 0C

S	2^9	2^8	2^7	2^6	2^5	2^4	2^3

MSb LSb

LSB—Address 0D

2^2	2^1	2^0	X	X	X	X	X

MSb LSb

Units: 4.88 mV

TEMPERATURE MEASUREMENT

The DS2755 uses an integrated temperature sensor to continually measure battery temperature. Temperature measurements are updated in the Temperature Register every 220ms in two's-complement format with a resolution of 0.125°C over a ±127°C range. The Temperature Register format is shown in Figure 8.

Figure 8. **TEMPERATURE REGISTER FORMAT**

MSB—Address 18								LSB—Address 19							
S	2^9	2^8	2^7	2^6	2^5	2^4	2^3	2^2	2^1	2^0	X	X	X	X	X
MSb							LSb	MSb							LSb

Units: 0.125°C

PROGRAMMABLE I/O

The PIO pin can be used as a general purpose programmable I/O pin, or as an interrupt output to alert the system of a critical change in Temperature or ACR registers. To use the PIO pin in the programmable I/O mode described in this section, the PIO interrupt method must not be enabled. See the Interrupt Signaling section.

As a programmable I/O pin, PIO provides a digital input or an open drain digital output. Writing a 1 to the PIO bit in the Special Feature Register disables the output driver. With the PIO pin Hi-Z, it can be used as an input. The logic level of the PIO pin is reported when the Special Feature Register is read via the serial interface.

To use the PIO pin as an output, write the desired output value to the PIO bit in the Special Feature Register. Writing a 0 to the PIO bit enables the PIO output driver, pulling the PIO pin to V_{SS}. As stated above, writing a 1 to the PIO bit forces the pin to a Hi-Z state. A pullup resistor or current source must be provided to force the pin high. The PIO pin can be biased several volts above V_{DD} allowing inter-operation with a system voltage which is higher than the battery voltage. Consult the Absolute Maximum Ratings table when operating the PIO pin significantly above V_{DD}. The DS2755 turns off the PIO output driver and sets the PIO bit high when in *Sleep* mode or when DQ is low for more than t_{SLEEP}, regardless of the state of the PMOD bit.

INTERRUPT SIGNALING

The interrupt feature is enabled by setting the Interrupt Enable (IE) bit (bit 2 in the Special Feature Register). When IE is set, an interrupt will be signaled if the alarm comparator thresholds are crossed. A 1-Wire RESET clears IE. The host must re-enable interrupts by setting IE in the last transaction on the bus.

The interrupt signal pin is selected by setting or clearing the Interrupt Output Select (IOS) bit (bit 2 in the Status Register). When IOS is set, the DQ pin performs the interrupt signaling, when IOS is cleared, the PIO pin performs the interrupt signaling.

DQ signals an interrupt condition by driving the 1-Wire bus low for t_{IL} µs. The DS2755 and all other 1-Wire devices present on the bus interpret this signal as a 1-Wire RESET. A Presence Pulse should be expected from all 1-Wire devices, including the DS2755 following the interrupt signal. The host system can sense the interrupt signal on the falling or rising edge of either the RESET or Presence Pulse.

PIO signals an interrupt by driving low. PIO remains low until the host clears the condition by writing a 1 to the PIO bit (bit 7 in the Special Feature Register). A pullup resistor or current source must be provided to force the pin high. The host can sense the interrupt on the falling edge of PIO.

ALARM COMPARATORS

Interrupt threshold values can be programmed by the user in the designated SRAM memory registers in the formats and locations found in Figure 9. Since these thresholds are located in SRAM memory, they must be reprogrammed if a loss of power to the DS2755 occurs. The DS2755 interrupts the system host to indicate that one of the following events has occurred:

- Accumulated Current ≥ Current Accumulator Interrupt High Threshold
- Accumulated Current ≤ Current Accumulator Interrupt Low Threshold
- Temperature ≥ Temperature Interrupt High Threshold
- Temperature ≤ Temperature Interrupt Low Threshold

The host may then poll the DS2755 to determine which threshold has been met or exceeded.

Figure 9. **INTERRUPT THRESHOLD REGISTER FORMATS**

Current Accumulator Interrupt High Threshold

MSB—Address 80

S	2^{14}	2^{13}	2^{12}	2^{11}	2^{10}	2^{9}	2^{8}

MSb LSb

LSB—Address 81

2^{7}	2^{6}	2^{5}	2^{4}	2^{3}	2^{2}	2^{1}	2^{0}

MSb LSb

Units: 6.25µVhrs

Current Accumulator Interrupt Low Threshold

MSB—Address 82

S	2^{14}	2^{13}	2^{12}	2^{11}	2^{10}	2^{9}	2^{8}

MSb LSb

LSB—Address 83

2^{7}	2^{6}	2^{5}	2^{4}	2^{3}	2^{2}	2^{1}	2^{0}

MSb LSb

Units: 6.25µVhrs

Temperature Interrupt High Threshold

Address 84

S	2^{6}	2^{5}	2^{4}	2^{3}	2^{2}	2^{1}	2^{0}

MSb LSb

Units: 1.0°C

Temperature Alarm Low Threshold

Address 85

S	2^{6}	2^{5}	2^{4}	2^{3}	2^{2}	2^{1}	2^{0}

MSb LSb

Units: 1.0°C

SNAPSHOT MODE

Measurement of the current and voltage can be synchronized to a system event with the Snapshot mode. Triggering a Snapshot event causes the ADC to abandon the current conversion and capture one current and one voltage sample. The Snapshot results are reported in the Current and Voltage registers for retrieval by the host. Normal current, voltage and temperature measurements and current accumulation resume immediately following a Snapshot event, though the Snapshot current and voltage values persist until the host system writes the SNAP bit in the Special Function Register to a 0. Since the snapshot mode disrupts the continuity of the coulomb counting process, it should be used sparingly.

The Sync Function Command [D2h] signals the ADC control to expect a Snapshot trigger on DQ. Following the Sync command, the host can trigger a Snapshot event by toggling the DQ line. Synchronization occurs on the