查询TPS2393供应商 捷多邦，专业PCB打样工厂，24小时加急出货

TEXAS INSTRUMENTS

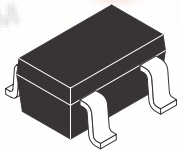

SLUS599 – JUNE 2004

OVERVOLTAGE PROTECTION CONTROLLER

FEATURES

- Up to 100-V Overvoltage Protection
- 6.9-V Overvoltage Shutdown Threshold
- 3.0-V Undervoltage Shutdown Threshold
- Overvoltage Turn-Off Time Less than 1.0 µs
- External N-Channel MOSFET Driven by Internal Charge Pump
- 1-mA Maximum Static Supply Current
- 5-Pin SOT−23 Package
- −40°C to 85°C Ambient Temperature Range
- 2.5-kV Human-Body-Model, 500-V CDM Electrostatic Discharge Protection

APPLICATIONS

- Cellular Phones
- PDAs
- Portable PCs
- Media Players
- Digital Cameras
- GPS

DESCRIPTION

The TPS2400 overvoltage protection controller is used with an external N-channel MOSFET to isolate sensitive electronics from destructive voltage spikes and surges. It is specifically designed to prevent large voltage transients associated with automotive environments (load dump) from damaging sensitive circuitry. When potentially damaging voltage levels are detected by the TPS2400 the supply is disconnected from the load before any damage can occur.

Internal circuitry includes a trimmed band-gap reference, oscillator, zener diode, charge pump, comparator, and control logic. The TPS2400 is designed for use with an external N-channel MOSFET which are readily available in a wide variety of voltages.

FUNCTIONAL BLOCK DIAGRAM

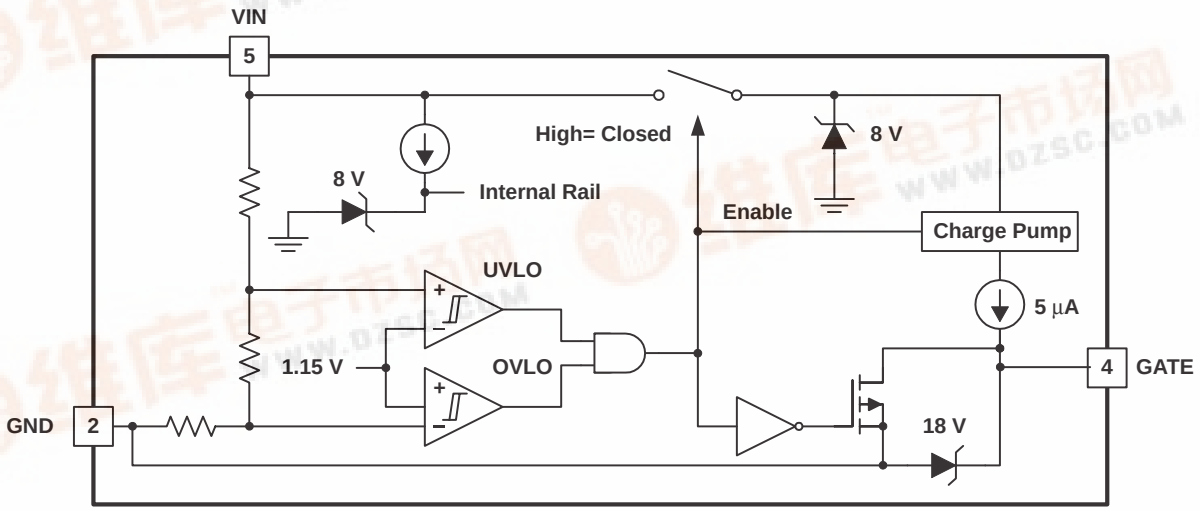

PRODUCTION DATA information is current as of publication date. Products conform to specifications per the terms of Texas Instruments standard warranty. Production processing does not necessarily include testing of all parameters.

Copyright © 2004, Texas Instruments Incorporated

These devices have limited built-in ESD protection. The leads should be shorted together or the device placed in conductive foam during storage or handling to prevent electrostatic damage to the MOS gates.

ABSOLUTE MAXIMUM RATINGS

over operating free-air temperature range (unless otherwise noted)[1]

		TPS2400	UNIT
Input voltage range, V_{IN}	V_{IN}	−0.3 to 110	V
Output voltage range, V_{OUT}	GATE (continuous)	−0.3 to 22	
	GATE (transient, < 10 µs, Duty Cycle < 0.1%)	−0.3 to 25	
Continuous total power dissipation		See dissipation rating table	
Operating junction temperature range, T_J		−40 to 125	°C
Operating free-air temperature range, T_A		−40 to 85	
Storage temperature range, T_{stg}		−65 to 150	
Lead temperature soldering 1, 6 mm (1/16 inch) from case for 10 seconds		260	

(1) Stresses beyond those listed under “absolute maximum ratings” may cause permanent damage to the device. These are stress ratings only, and functional operation of the device at these or any other conditions beyond those indicated under “recommended operating conditions” is not implied. Exposure to absolute−maximum−rated conditions for extended periods may affect device reliability. All voltages are with respect to GND.

DISSIPATION RATINGS

PACKAGE	T_A < 25°C	DERATING FACTOR T_A = 25°C	T_A = 70°C POWER RATING	T_A = 85°C POWER RATING
SOT−23	285 mW	2.85 mW/°C	155 mW	114 mW

RECOMMENDED OPERATING CONDITIONS

	MIN	NOM	MAX	UNIT
Supply voltage at V_{IN}	3.1		6.8	V
Operating junction temperature	−40		125	°C

ELECTROSTATIC DISCHARGE (ESD) PROTECTION

	MIN	MAX	UNIT
Human Body Model	2.5		kV
CDM	0.5		

ORDERING INFORMATION

$T_A = T_J$	PACKAGED DEVICES SOT23−5 (DBV)	QUANTITY PER REEL
−40°C to 85°C	TPS2400DBVR	3000
	TPS2400DBVT	500

DBV PACKAGE (TOP VIEW)

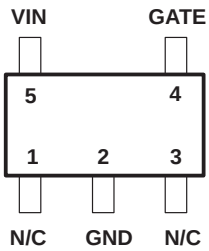

ELECTRICAL CHARACTERISTICS

T_A = −40°C to 85°C, T_J = −40°C to 125°C (unless otherwise noted)

PARAMETER		TEST CONDITIONS	MIN	TYP	MAX	UNIT
INPUT						
$I_{I(VIN)}$	Input supply current, V_{IN}	$V_{I(VIN)}$ = 3.1 V		65	110	µA
		$V_{I(VIN)}$ = 5.0 V		95	180	
		$V_{I(VIN)}$ = 6.5 V		135	220	
		$V_{I(VIN)}$ = 100 V		550	1000	
$UVLO_{(upper)}$	Undervoltage lockout upper threshold	$V_{I(VIN)}$ rising	2.9	3.0	3.1	V
$UVLO_{(hyst)}$	Undervoltage lockout hysteresis		85	100	115	mV
$OVP_{(upper)}$	Overvoltage protection upper threshold	$V_{I(VIN)}$ rising	6.7	6.9	7.1	V
$OVP_{(hyst)}$	Overvoltage protection hysteresis		135	150	165	mV
GATE DRIVE						
$I_{OSOURCE(gate)}$	Gate sourcing current	$V_{I(VIN)}$ = 3.1 V, $V_{O(gate)}$ = 7 V	3		10	µA
		$V_{I(VIN)}$ = 5 V, $V_{O(gate)}$ = 10 V				
$I_{OSINK(gate)}$	Gate sinking current(1)	$V_{I(VIN)}$ = 7.2 V, $V_{O(gate)}$ = 15 V	350	485	600	mA
$V_{OH(gate)}$	Gate output high voltage	$V_{I(VIN)}$ = 3.1 V, $I_{OSOURCE(gate)}$ = 1.0 µA	10		12	V
		$V_{I(VIN)}$ = 5 V, $I_{OSOURCE(gate)}$ = 1.5 µA	16		19	
		$V_{I(VIN)}$ = 6.5 V, $I_{OSOURCE(gate)}$ = 1.5 µA	16		20	
$V_{OHMAX(gate)}$	Gate output high maximum voltage	$I_{OSOURCE(gate)}$ = 0 µA			20	
$V_{OL(gate)}$	Gate output low voltage	$V_{I(VIN)}$ = 7.2 V, $I_{OSINK(gate)}$ = 50 mA			1.0	
$T_{ON(prop)}$	Gate turn-on propogation delay, (50% $V_{I(vin)}$ to $V_{O(gate)}$ = 1 V, R_{LOAD} = 10 MΩ)	$V_{I(VIN)}$ stepped from 0 V to 5 V, C_{LOAD} = 1 nF	0.1		0.6	ms
		C_{LOAD} = 10 nF	0.9		3	
$T_{ON(rise)}$	Gate turn-on rise time, ($V_{O(gate)}$ = 1 V to 90% $V_{O(gate)}$, R_{LOAD} = 10 MΩ)	$V_{I(VIN)}$ stepped from 0 V to 5V, C_{LOAD} = 1 nF	1.5		6	
		C_{LOAD} = 10 nF	15		55	
T_{OFF}	Turn-off time, (50% $V_{I(VIN)}$ step to $V_{O(GATE)}$ = 6.9 V, R_{LOAD} = 10 meg Ω)	$V_{I(VIN)}$ stepped from 6 V to 8 V, C_{LOAD} = 1 nF			0.25	µs
		C_{LOAD} = 10 nF			0.5	

(1) Pulse-testing techniques maintain junction temperature close to ambient temperature; thermal effects must be taken into account separately.

TERMINAL FUNCTIONS

Terminals		I/O	Description
Name	No.		
GATE	4	O	Output gate drive for an external N-channel MOSFET.
GND	2	−	Ground
NC	1	−	No internal connection
NC	3	−	
VIN	5	I	Input voltage

DETAILED DESCRIPTION

Undervoltage and Overvoltage Comparators and Logic

When the comparators detect that V_{CC} is within the operating window, the GATE output is driven high to turn on the external N-channel MOSFET. When V_{CC} goes above the set overvoltage level, or below the set undervoltage level, the GATE output is driven low.

Charge pump

An internal charge pump supplies power to the GATE drive circuit and provides the necessary voltage to pull the gate of the MOSFET above the source.

Zener Diodes

Limit internal power rails to 8.0 V and GATE output to 18 V.

Shut-Off MOSFET

When an undervoltage or overvoltage event occurs, this MOSFET is turned on to pull down the gate of the external N-channel MOSFET, thus isolating the load from the incoming transient.

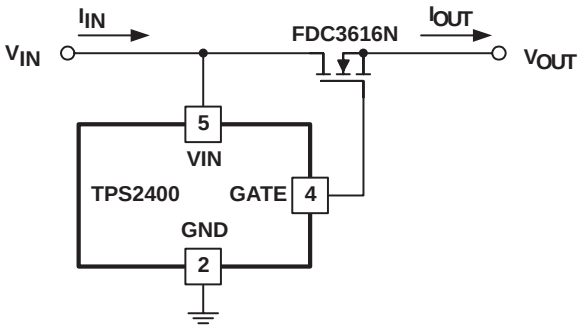

UDG−04056

Figure 1. Application Diagram

APPLICATION INFORMATION

Overvoltage Protection

An overvoltage condition is commonly created in these situations.

- Unplugging a wall adapter from an AC outlet. Energy stored in the transformer magnetizing inductance is released and spikes the output voltage.
- Powering an appliance with the wrong voltage adapter (user error)
- Automotive load dump due to ignition, power windows, or starter motor (for example)
- An AC power-line transient
- Power switch contact bounce (causes power supply/distribution inductive kick), (See Figure 2)

Many electronic appliances use a transient voltage suppressor (TVS) for overvoltage protection as shown in Figure 2. The TVS is typically a metal-oxide varister (MOV) or Transzorb. The former is a non-linear resistor with a soft turn-on characteristic whereas the latter is a large junction zener diode with a very sharp turn-on characteristic. These devices have high pulse-power capability and pico-second response time. A TVS clamps the load voltage to a safe level so the load operates uninterrupted in the presence of power supply output-voltage spikes. But in the event of a voltage surge, fuse F2 blows and must be replaced to restore operation.

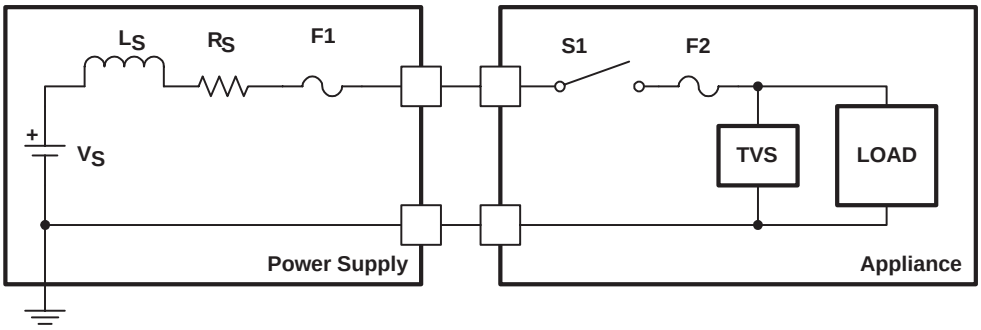

Figure 2. Load Protection Using Transient Voltage Suppressor Clamps

The TPS2400 circuit in Figure 3 protects the load from an overvoltage, not by clamping the load voltage like a TVS, but by disconnecting the load from the power supply. The circuit responds to an overvoltage in less than 1 µs and rides out a voltage surge without blowing fuse F2. Note that the voltage surge can be of indefinite duration.

The load can see a voltage spike of up to 1 µs, the amount of time it takes the TPS2400 to disconnect the load from the power supply. A low-power zener diode D2 can be used to clamp the load voltage to a safe level. In most cases, diode D2 is not necessary since the load bypass capacitor (not shown) forms a low-pass filter with resistor R_S and inductor L_S to significantly attenuate the spike.

APPLICATION INFORMATION

When the TPS2400 disconnects the load from the power supply, the power-supply output-voltage spikes as the stored energy in inductor L_S is released. A zener diode D1 or a small ceramic capacitor can be used to keep the voltage spike at a safe level.

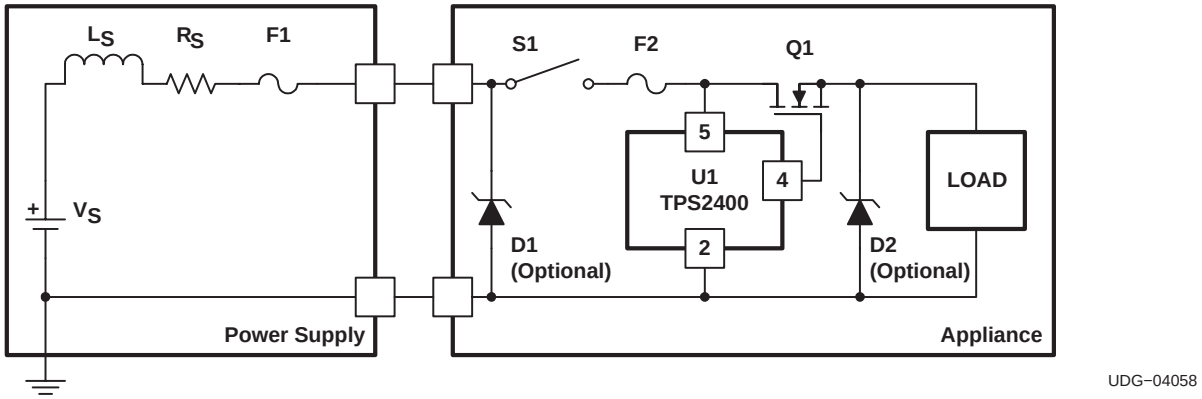

Figure 3. TPS2400 Application Block Diagram

Controlling the Load Inrush-Current

Figure 4 is a simplified representation of an appliance with a plug-in power supply (e.g., wall adapter). When power is first applied to the load in Figure 4, the large filter capacitor C_{LOAD} acts like a short circuit, producing an immediate inrush-current that is limited by the power-supply output resistance and inductance, R_S and L_S, respectively. This current can be several orders of magnitude greater than the steady-state load current. The large inrush current can damage power connectors P1 and J1 and power switch S1, and stress components. Increasing the power-supply output resistance and inductance lowers the inrush current. However, the former increases system power-dissipation and the latter decreases connector and switch reliability by encouraging the contacts to arc when they bounce.

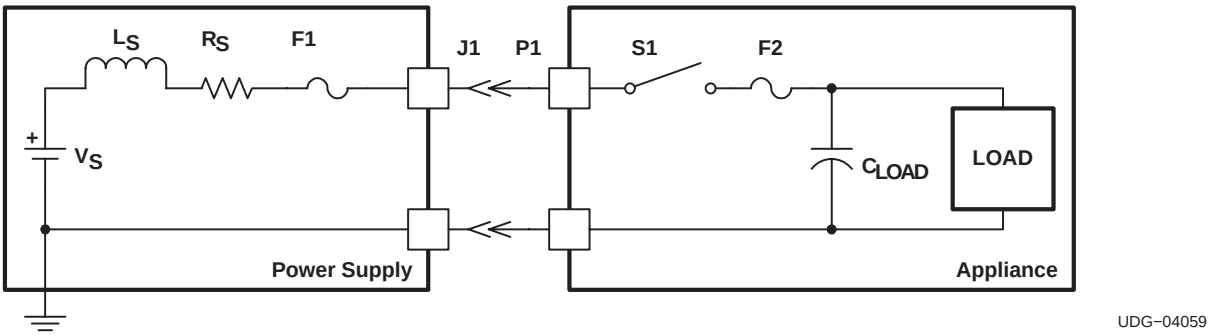

Figure 4. Power-Supply Output Resistance and Inductance Circuit Model

APPLICATION INFORMATION

The TPS2400 circuit in Figure 5 limits the inrush current without these draw backs. The TPS2400 charges the transistor Q1 gate capacitance C_G with a 5-µA source when Q1 is commanded to turn on. Transistor Q1 is wired as a source follower so the gate-voltage slew rate and the load-voltage slew rate are identical and equal to

$$\frac{\partial V_L}{\partial t} = \frac{5\ \mu A}{C_G} \tag{1}$$

The corresponding inrush current is:

$$I_{INRUSH} \approx C_L \times \frac{\partial V_L}{\partial t} = \left(\frac{C_L}{C_G}\right) \times 5\ \mu A \tag{2}$$

An external capacitor and a series 1-kΩ resistor can be connected to the gate of Q1 and ground to reduce inrush current further. In this case, the parameter C_G in equations 1 and 2 is the sum of the internal and external FET gate capacitance. The 1-kΩ resistor decouples the external gate capacitor so the TPS2400 can rapidly turn off transistor Q1 in response to an overvoltage condition.

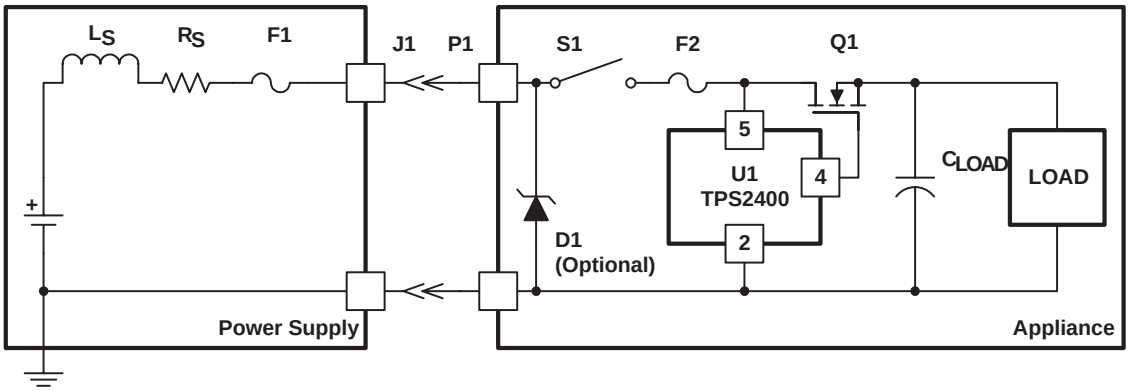

Figure 5. Turn-On Voltage Slew Rate Control Using the TPS2400

TYPICAL CHARACTERISTICS

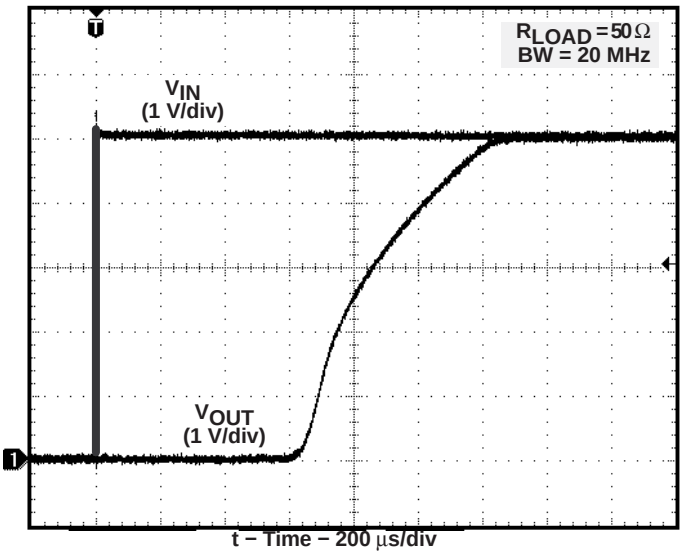

Figure 6. Output Turn-On Response

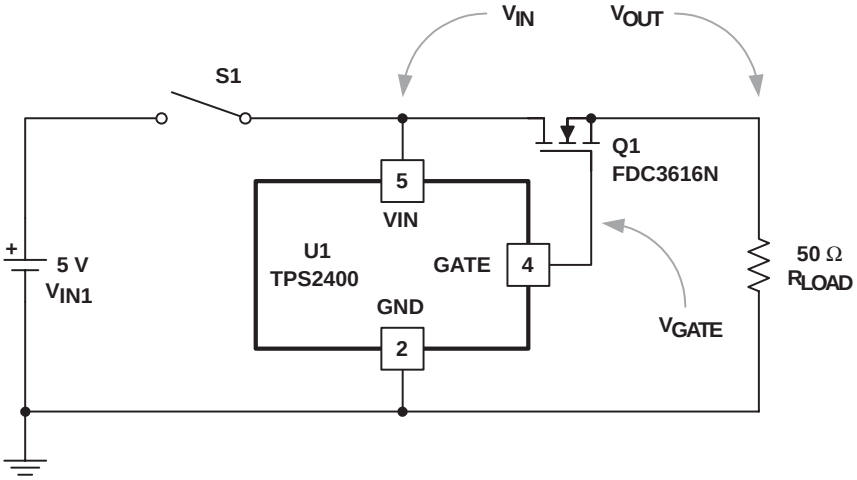

UDG−04062

Figure 7. Output Turn-On Response Test Circuit

TYPICAL CHARACTERISTICS

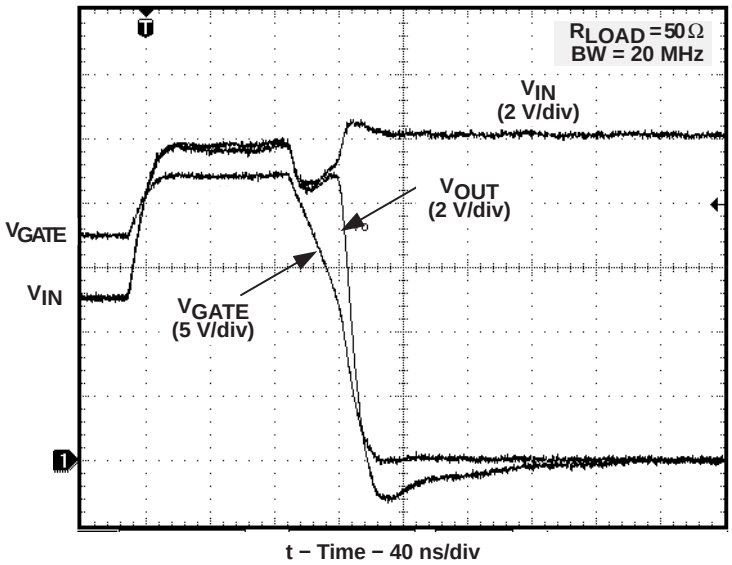

Figure 8. Output Turn-Off Response

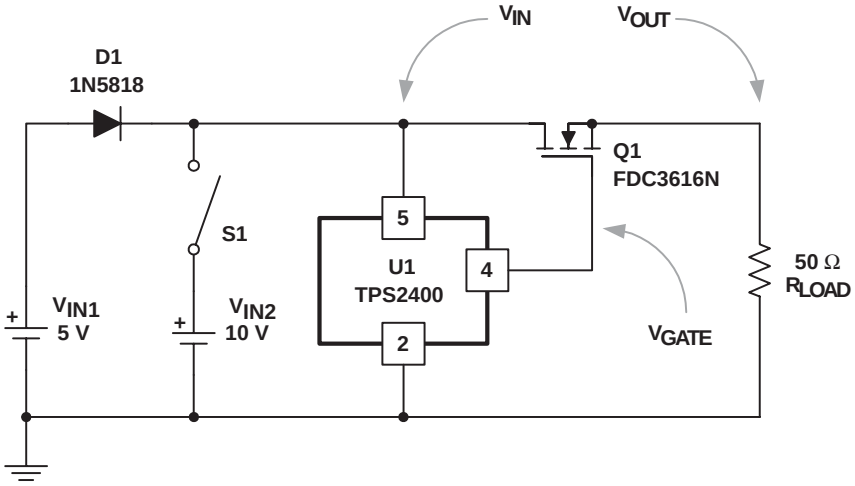

Figure 9. Output Turn-Off Response Test Circuit

TYPICAL CHARACTERISTICS

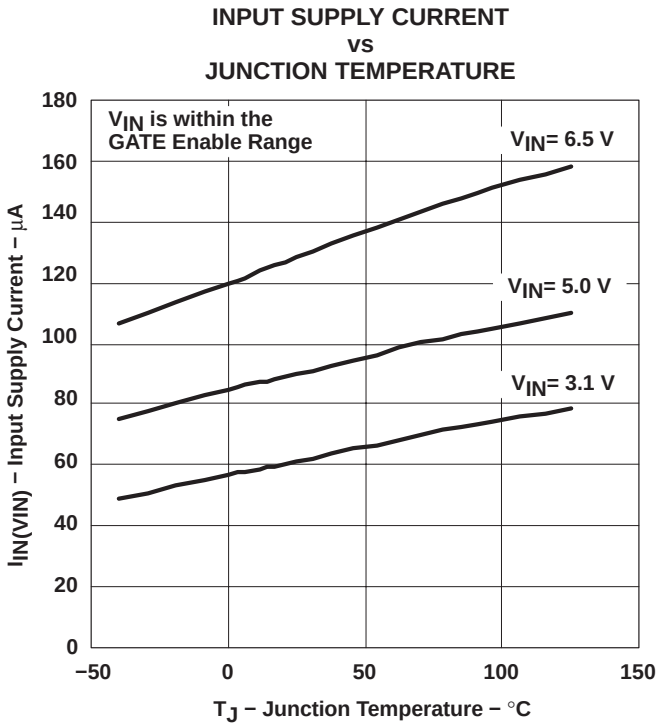

Figure 10

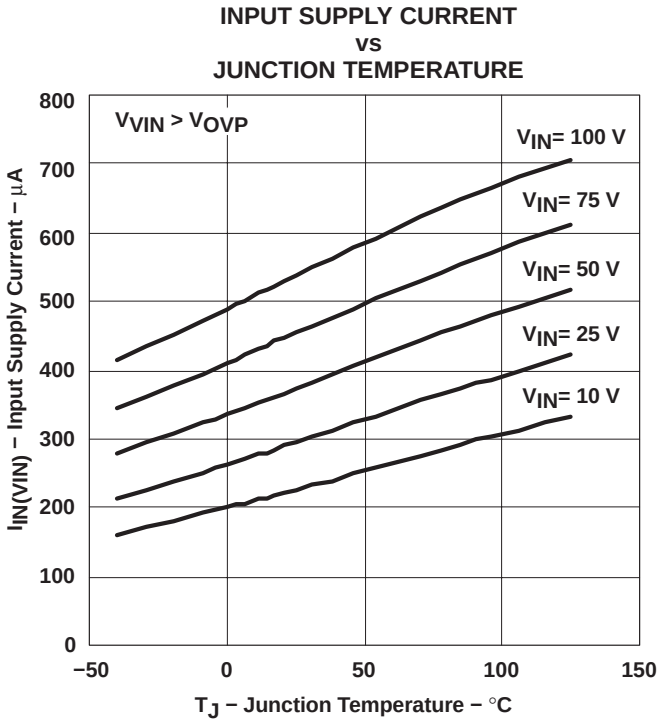

Figure 11

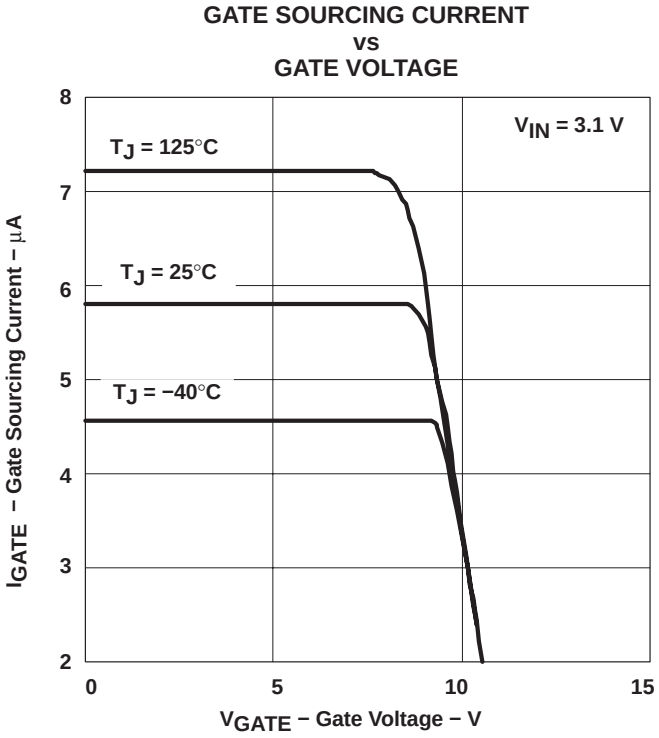

Figure 12

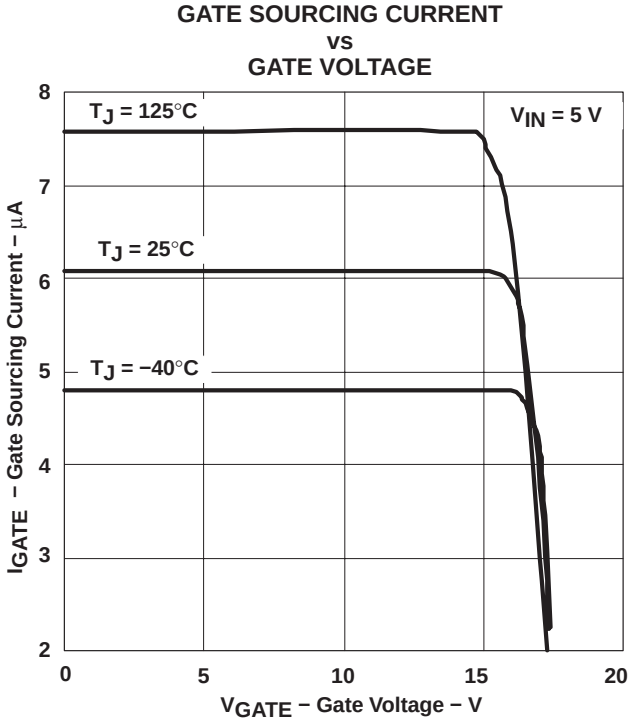

Figure 13

TYPICAL CHARACTERISTICS

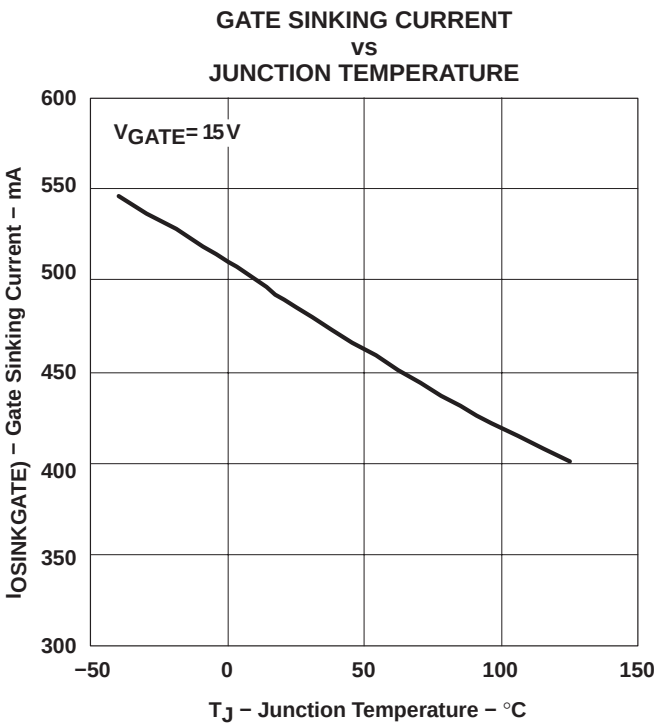

Figure 14

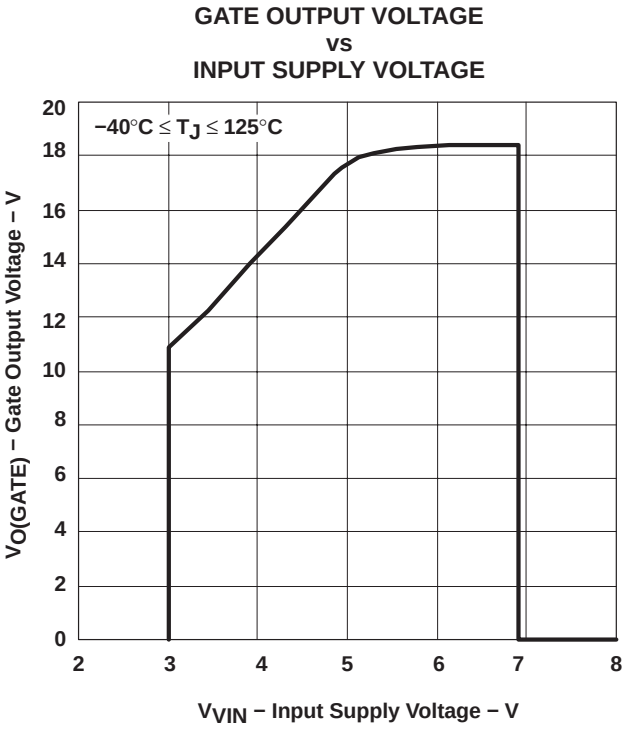

Figure 15

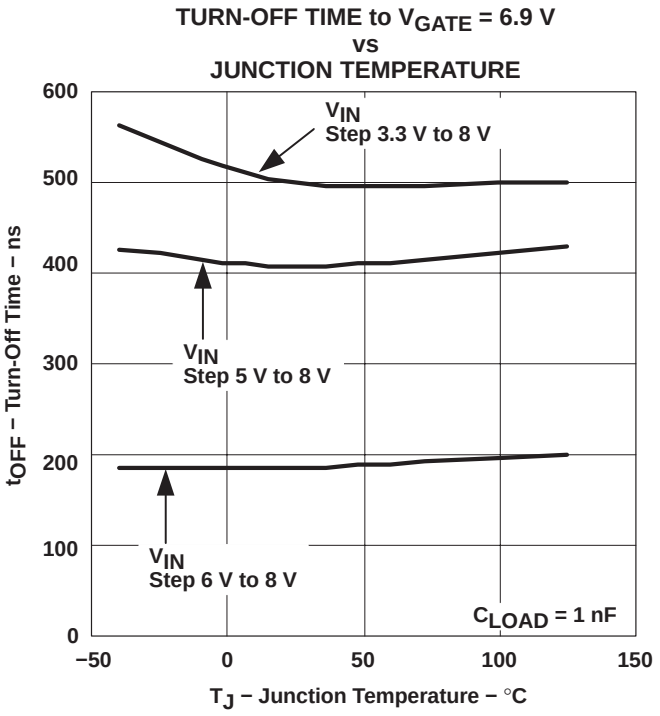

Figure 16

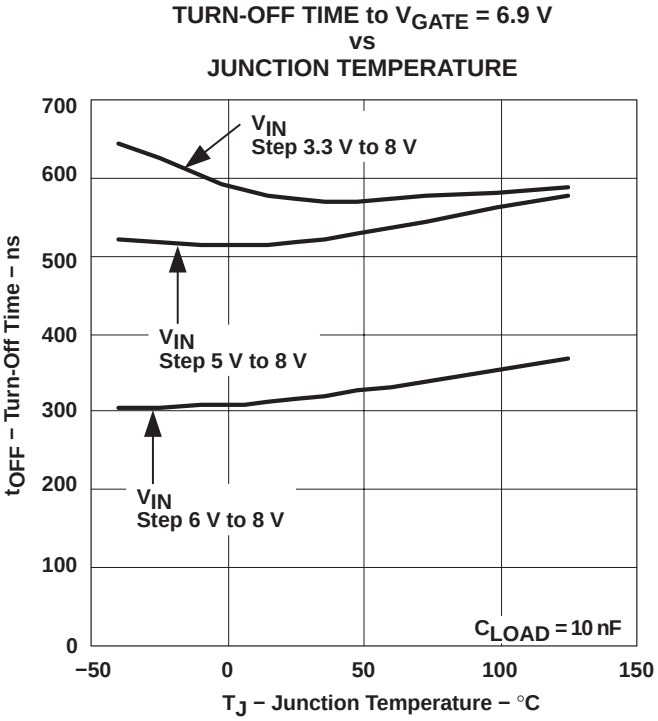

Figure 17

DBV (R−PDSO−G5) PLASTIC SMALL−OUTLINE PACKAGE

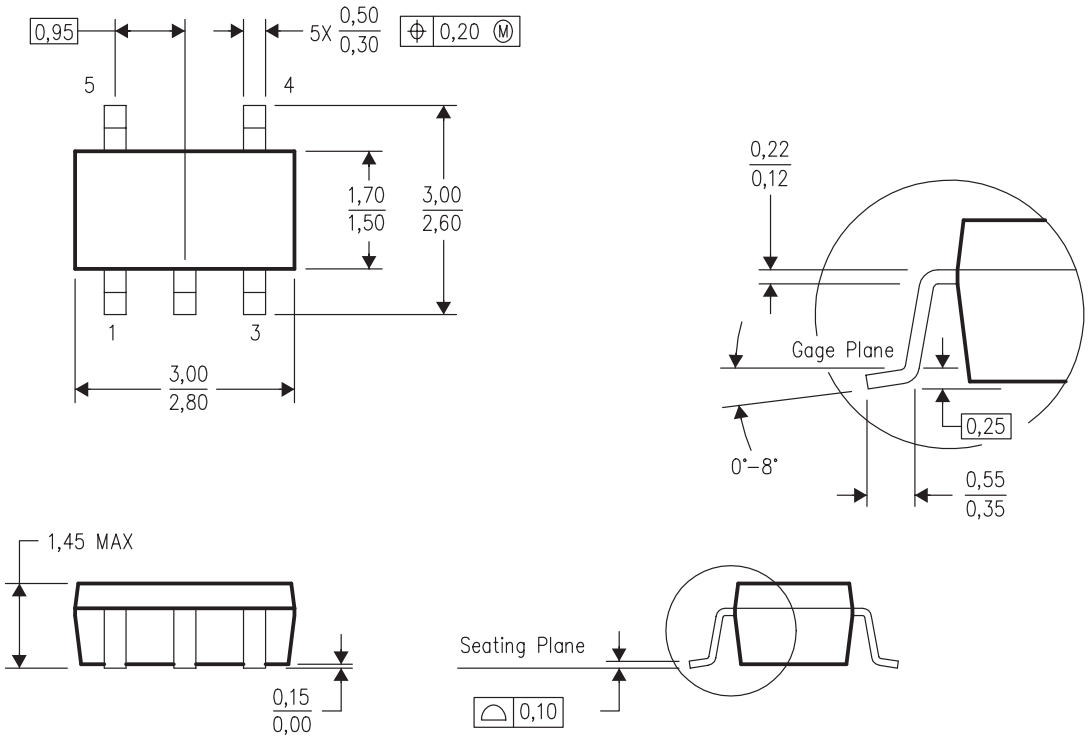

4073253−4/H 10/2003

NOTES:
A. All linear dimensions are in millimeters.
B. This drawing is subject to change without notice.
C. Body dimensions do not include mold flash or protrusion.
D. Falls within JEDEC MO−178 Variation AA.

PACKAGING INFORMATION

Orderable Device	Status [1]	Package Type	Package Drawing	Pins	Package Qty	Eco Plan [2]	Lead/Ball Finish	MSL Peak Temp [3]
TPS2400DBVR	ACTIVE	SOT-23	DBV	5	1	Green (RoHS & no Sb/Br)	CU NIPDAU	Level-2-260C-1 YEAR
TPS2400DBVRG4	ACTIVE	SOT-23	DBV	5	1	Green (RoHS & no Sb/Br)	CU NIPDAU	Level-2-260C-1 YEAR
TPS2400DBVT	ACTIVE	SOT-23	DBV	5	250	Green (RoHS & no Sb/Br)	CU NIPDAU	Level-2-260C-1 YEAR
TPS2400DBVTG4	ACTIVE	SOT-23	DBV	5	250	Green (RoHS & no Sb/Br)	CU NIPDAU	Level-2-260C-1 YEAR

[1] The marketing status values are defined as follows:
ACTIVE: Product device recommended for new designs.
LIFEBUY: TI has announced that the device will be discontinued, and a lifetime-buy period is in effect.
NRND: Not recommended for new designs. Device is in production to support existing customers, but TI does not recommend using this part in a new design.
PREVIEW: Device has been announced but is not in production. Samples may or may not be available.
OBSOLETE: TI has discontinued the production of the device.

[2] Eco Plan - The planned eco-friendly classification: Pb-Free (RoHS), Pb-Free (RoHS Exempt), or Green (RoHS & no Sb/Br) - please check http://www.ti.com/productcontent for the latest availability information and additional product content details.
TBD: The Pb-Free/Green conversion plan has not been defined.
Pb-Free (RoHS): TI's terms "Lead-Free" or "Pb-Free" mean semiconductor products that are compatible with the current RoHS requirements for all 6 substances, including the requirement that lead not exceed 0.1% by weight in homogeneous materials. Where designed to be soldered at high temperatures, TI Pb-Free products are suitable for use in specified lead-free processes.
Pb-Free (RoHS Exempt): This component has a RoHS exemption for either 1) lead-based flip-chip solder bumps used between the die and package, or 2) lead-based die adhesive used between the die and leadframe. The component is otherwise considered Pb-Free (RoHS compatible) as defined above.
Green (RoHS & no Sb/Br): TI defines "Green" to mean Pb-Free (RoHS compatible), and free of Bromine (Br) and Antimony (Sb) based flame retardants (Br or Sb do not exceed 0.1% by weight in homogeneous material)

[3] MSL, Peak Temp. -- The Moisture Sensitivity Level rating according to the JEDEC industry standard classifications, and peak solder temperature.

Important Information and Disclaimer: The information provided on this page represents TI's knowledge and belief as of the date that it is provided. TI bases its knowledge and belief on information provided by third parties, and makes no representation or warranty as to the accuracy of such information. Efforts are underway to better integrate information from third parties. TI has taken and continues to take reasonable steps to provide representative and accurate information but may not have conducted destructive testing or chemical analysis on incoming materials and chemicals. TI and TI suppliers consider certain information to be proprietary, and thus CAS numbers and other limited information may not be available for release.

In no event shall TI's liability arising out of such information exceed the total purchase price of the TI part(s) at issue in this document sold by TI to Customer on an annual basis.

DBV (R–PDSO–G5) PLASTIC SMALL–OUTLINE PACKAGE

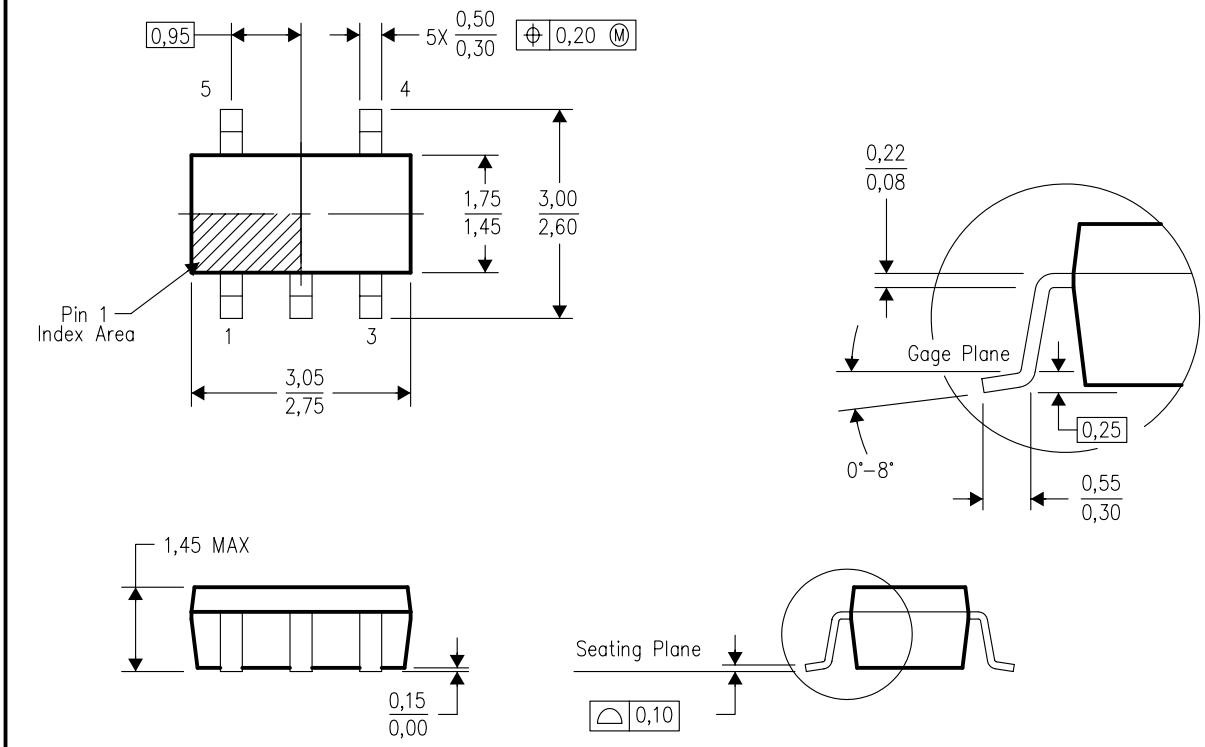

4073253–4/K 03/2006

NOTES:
A. All linear dimensions are in millimeters.
B. This drawing is subject to change without notice.
C. Body dimensions do not include mold flash or protrusion. Mold flash and protrusion shall not exceed 0.15 per side.
D. Falls within JEDEC MO–178 Variation AA.

IMPORTANT NOTICE

Texas Instruments Incorporated and its subsidiaries (TI) reserve the right to make corrections, modifications, enhancements, improvements, and other changes to its products and services at any time and to discontinue any product or service without notice. Customers should obtain the latest relevant information before placing orders and should verify that such information is current and complete. All products are sold subject to TI's terms and conditions of sale supplied at the time of order acknowledgment.

TI warrants performance of its hardware products to the specifications applicable at the time of sale in accordance with TI's standard warranty. Testing and other quality control techniques are used to the extent TI deems necessary to support this warranty. Except where mandated by government requirements, testing of all parameters of each product is not necessarily performed.

TI assumes no liability for applications assistance or customer product design. Customers are responsible for their products and applications using TI components. To minimize the risks associated with customer products and applications, customers should provide adequate design and operating safeguards.

TI does not warrant or represent that any license, either express or implied, is granted under any TI patent right, copyright, mask work right, or other TI intellectual property right relating to any combination, machine, or process in which TI products or services are used. Information published by TI regarding third-party products or services does not constitute a license from TI to use such products or services or a warranty or endorsement thereof. Use of such information may require a license from a third party under the patents or other intellectual property of the third party, or a license from TI under the patents or other intellectual property of TI.

Reproduction of information in TI data books or data sheets is permissible only if reproduction is without alteration and is accompanied by all associated warranties, conditions, limitations, and notices. Reproduction of this information with alteration is an unfair and deceptive business practice. TI is not responsible or liable for such altered documentation.

Resale of TI products or services with statements different from or beyond the parameters stated by TI for that product or service voids all express and any implied warranties for the associated TI product or service and is an unfair and deceptive business practice. TI is not responsible or liable for any such statements.

Following are URLs where you can obtain information on other Texas Instruments products and application solutions:

Products		**Applications**	
Amplifiers	amplifier.ti.com	Audio	www.ti.com/audio
Data Converters	dataconverter.ti.com	Automotive	www.ti.com/automotive
DSP	dsp.ti.com	Broadband	www.ti.com/broadband
Interface	interface.ti.com	Digital Control	www.ti.com/digitalcontrol
Logic	logic.ti.com	Military	www.ti.com/military
Power Mgmt	power.ti.com	Optical Networking	www.ti.com/opticalnetwork
Microcontrollers	microcontroller.ti.com	Security	www.ti.com/security
		Telephony	www.ti.com/telephony
		Video & Imaging	www.ti.com/video
		Wireless	www.ti.com/wireless

Mailing Address: Texas Instruments
Post Office Box 655303 Dallas, Texas 75265

Copyright © 2006, Texas Instruments Incorporated