TEXAS INSTRUMENTS
www.ti.com

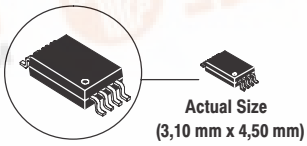

TPS2110A
TPS2111A

SBVS043 − MARCH 2004

AUTOSWITCHING POWER MUX

FEATURES

- Two-Input, One-Output Power Multiplexer With Low $r_{DS(on)}$ Switches:
  - 84 mΩ Typ (TPS2111A)
  - 120 mΩ Typ (TPS2110A)
- Reverse and Cross-Conduction Blocking
- Wide Operating Voltage Range . . . .2.8 V to 5.5 V
- Low Standby Current . . . . 0.5-µA Typ
- Low Operating Current . . . . 55-µA Typ
- Adjustable Current Limit
- Controlled Output Voltage Transition Times, Limits Inrush Current and Minimizes Output Voltage Hold-Up Capacitance
- CMOS- and TTL-Compatible Control Inputs
- Manual and Auto-Switching Operating Modes
- Thermal Shutdown
- Available in a TSSOP-8 Package

APPLICATIONS

- PCs
- PDAs
- Digital Cameras
- Modems
- Cell Phones
- Digital Radios
- MP3 Players

PW PACKAGE
(TOP VIEW)

DESCRIPTION

The TPS211xA family of power multiplexers enables seamless transition between two power supplies, such as a battery and a wall adapter, each operating at 2.8−5.5 V and delivering up to 1 A. The TPS211xA family includes extensive protection circuitry, including user-programmable current limiting, thermal protection, inrush current control, seamless supply transition, cross-conduction blocking, and reverse-conduction blocking. These features greatly simplify designing power multiplexer applications.

TYPICAL APPLICATION

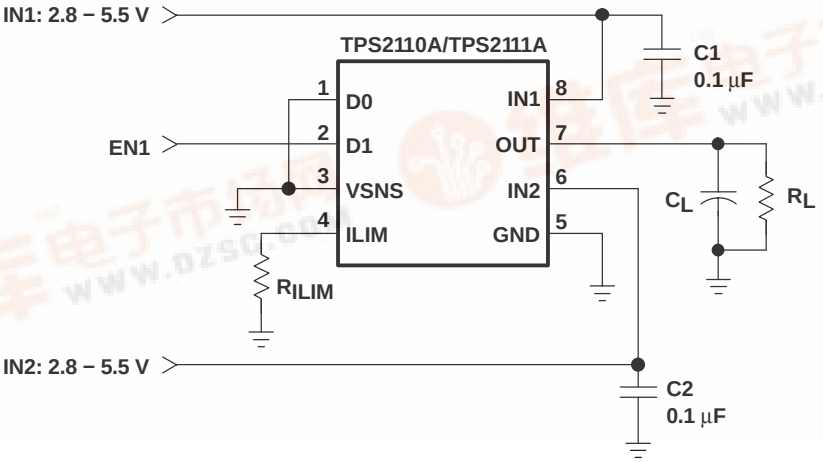

These devices have limited built-in ESD protection. The leads should be shorted together or the device placed in conductive foam during storage or handling to prevent electrostatic damage to the MOS gates.

AVAILABLE OPTIONS

FEATURE		TPS2110A	TPS2111A	TPS2112A	TPS2113A	TPS2114A	TPS2115A
Current Limit Adjustment Range		0.31−0.75A	0.63−1.25A	0.31−0.75A	0.63−1.25A	0.31−0.75A	0.63−1.25A
Switching Modes	Manual	Yes	Yes	No	No	Yes	Yes
	Automatic	Yes	Yes	Yes	Yes	Yes	Yes
Switch Status Output		No	No	Yes	Yes	Yes	Yes
Package		TSSOP-8	TSSOP-8	TSSOP-8	TSSOP-8	TSSOP-8	TSSOP-8

ORDERING INFORMATION

T_A	PACKAGE	ORDERING NUMBER(1)	MARKINGS
−40°C to 85°C	TSSOP-8 (PW)	TPS2110APW	2110A
		TPS2111APW	2111A

(1) The PW package is available taped and reeled. Add an **R** suffix to the device type (e.g., TPS2110APWR) to indicate tape and reel.

PACKAGE DISSIPATION RATINGS

PACKAGE	DERATING FACTOR ABOVE T_A = 25°C	$T_A \leq$ 25°C POWER RATING	T_A = 70°C POWER RATING	T_A = 85°C POWER RATING
TSSOP-8 (PW)	3.9 mW/°C	387 mW	213 mW	155 mW

ABSOLUTE MAXIMUM RATINGS

over operating free-air temperature range unless otherwise noted(1)

		TPS2110A, TPS2111A
Input voltage range at pins IN1, IN2, D0, D1, VSNS, ILIM(2)		−0.3 V to 6 V
Output voltage range, $V_{O(OUT)}$(2)		−0.3 V to 6 V
Continuous output current, I_O	TPS2110A	0.9 A
	TPS2111A	1.5 A
Continuous total power dissipation		See Dissipation Rating Table
Operating virtual junction temperature range, T_J		−40°C to 125°C
Storage temperature range, T_{stg}		−65°C to 150°C
Lead temperature soldering 1,6 mm (1/16 inch) from case for 10 seconds		260°C

(1) Stresses beyond those listed under *absolute maximum ratings* may cause permanent damage to the device. These are stress ratings only, and functional operation of the device at these or any other conditions beyond those indicated under *recommended operating conditions* is not implied. Exposure to absolute-maximum-rated conditions for extended periods may affect device reliability.
(2) All voltages are with respect to GND.

RECOMMENDED OPERATING CONDITIONS

		MIN	MAX	UNIT
Input voltage at IN1, $V_{I(IN1)}$	$V_{I(IN2)} \geq$ 2.8 V	1.5	5.5	V
	$V_{I(IN2)}$ < 2.8 V	2.8	5.5	
Input voltage at IN2, $V_{I(IN2)}$	$V_{I(IN1)} \geq$ 2.8 V	1.5	5.5	V
	$V_{I(IN1)}$ < 2.8 V	2.8	5.5	
Input voltage, $V_{I(DO)}$, $V_{I(D1)}$, $V_{I(VSNS)}$		0	5.5	V
Current limit adjustment range, $I_{O(OUT)}$	TPS2110A	0.31	0.75	A
	TPS2111A	0.63	1.25	
Operating virtual junction temperature, T_J		−40	125	°C

ELECTROSTATIC DISCHARGE (ESD) PROTECTION

	MIN	MAX	UNIT
Human body model		2	kV
CDM		500	V

ELECTRICAL CHARACTERISTICS

over recommended operating junction temperature range, $V_{I(IN1)} = V_{I(IN2)} = 5.5$ V, $R_{ILIM} = 400\ \Omega$ (unless otherwise noted)

PARAMETER		TEST CONDITIONS		TPS2110A MIN	TPS2110A TYP	TPS2110A MAX	TPS2111A MIN	TPS2111A TYP	TPS2111A MAX	UNIT
POWER SWITCH										
$r_{DS(on)}$(1)	Drain-source on-state resistance (INx−OUT)	$T_J = 25°C$, $I_L = 500$ mA	$V_{I(IN1)} = V_{I(IN2)} = 5.0$ V		120	140		84	110	mΩ
			$V_{I(IN1)} = V_{I(IN2)} = 3.3$ V		120	140		84	110	
			$V_{I(IN1)} = V_{I(IN2)} = 2.8$ V		120	140		84	110	
		$T_J = 125°C$, $I_L = 500$ mA	$V_{I(IN1)} = V_{I(IN2)} = 5.0$ V			220			150	mΩ
			$V_{I(IN1)} = V_{I(IN2)} = 3.3$ V			220			150	
			$V_{I(IN1)} = V_{I(IN2)} = 2.8$ V			220			150	

(1) The TPS211xA can switch a voltage as low as 1.5 V as long as there is a minimum of 2.8 V at one of the input power pins. In this specific case, the lower supply voltage has no effect on the IN1 and IN2 switch on-resistances.

PARAMETER	TEST CONDITIONS	MIN	TYP	MAX	UNIT
LOGIC INPUTS (D0 AND D1)					
V_{IH} High-level input voltage		2			V
V_{IL} Low-level input voltage				0.7	V
Input current at D0 or D1	D0 or D1 = High, sink current			1	µA
	D0 or D1 = Low, source current	0.5	1.4	5	
SUPPLY AND LEAKAGE CURRENTS					
Supply current from IN1 (operating)	D1 = High, D0 = Low (IN1 active), $V_{I(IN1)} = 5.5$ V, $V_{I(IN2)} = 3.3$ V, $I_{O(OUT)} = 0$ A		55	90	µA
	D1 = High, D0 = Low (IN1 active), $V_{I(IN1)} = 3.3$ V, $V_{I(IN2)} = 5.5$ V, $I_{O(OUT)} = 0$ A		1	12	
	D0 = D1 = Low (IN2 active), $V_{I(IN1)} = 5.5$ V, $V_{I(IN2)} = 3.3$ V, $I_{O(OUT)} = 0$ A			75	
	D0 = D1 = Low (IN2 active), $V_{I(IN1)} = 3.3$ V, $V_{I(IN2)} = 5.5$ V, $I_{O(OUT)} = 0$ A			1	
Supply current from IN2 (operating)	D1 = High, D0 = Low (IN1 active), $V_{I(IN1)} = 5.5$ V, $V_{I(IN2)} = 3.3$ V, $I_{O(OUT)} = 0$ A			1	µA
	D1 = High, D0 = Low (IN1 active), $V_{I(IN1)} = 3.3$ V, $V_{I(IN2)} = 5.5$ V, $I_{O(OUT)} = 0$ A			75	
	D0 = D1 = Low (IN2 active), $V_{I(IN1)} = 5.5$ V, $V_{I(IN2)} = 3.3$ V, $I_{O(OUT)} = 0$ A		1	12	
	D0 = D1 = Low (IN2 active), $V_{I(IN1)} = 3.3$ V, $V_{I(IN2)} = 5.5$ V, $I_{O(OUT)} = 0$ A		55	90	
Quiescent current from IN1 (STANDBY)	D0 = D1 = High (inactive), $V_{I(IN1)} = 5.5$ V, $V_{I(IN2)} = 3.3$ V, $I_{O(OUT)} = 0$ A		0.5	2	µA
	D0 = D1 = High (inactive), $V_{I(IN1)} = 3.3$ V, $V_{I(IN2)} = 5.5$ V, $I_{O(OUT)} = 0$ A			1	
Quiescent current from IN2 (STANDBY)	D0 = D1 = High (inactive), $V_{I(IN1)} = 5.5$ V, $V_{I(IN2)} = 3.3$ V, $I_{O(OUT)} = 0$ A			1	µA
	D0 = D1 = High (inactive), $V_{I(IN1)} = 3.3$ V, $V_{I(IN2)} = 5.5$ V, $I_{O(OUT)} = 0$ A		0.5	2	
Forward leakage current from IN1 (measured from OUT to GND)	D0 = D1 = High (inactive), $V_{I(IN1)} = 5.5$ V, IN2 open, $V_{O(OUT)} = 0$ V (shorted), $T_J = 25°C$		0.1	5	µA
Forward leakage current from IN2 (measured from OUT to GND)	D0 = D1 = High (inactive), $V_{I(IN2)} = 5.5$ V, IN1 open, $V_{O(OUT)} = 0$ V (shorted), $T_J = 25°C$		0.1	5	µA
Reverse leakage current to INx (measured from INx to GND)	D0 = D1 = High (inactive), $V_{I(INx)} = 0$ V, $V_{O(OUT)} = 5.5$ V, $T_J = 25°C$		0.3	5	µA

ELECTRICAL CHARACTERISTICS (Continued)

over recommended operating junction temperature range, $V_{I(IN1)} = V_{I(IN2)} = 5.5$ V, $R_{ILIM} = 400\ \Omega$ (unless otherwise noted)

PARAMETER			TEST CONDITIONS	MIN	TYP	MAX	UNIT
CURRENT LIMIT CIRCUIT							
Current limit accuracy		TPS2110A	$R_{ILIM} = 400\ \Omega$	0.51	0.63	0.80	A
			$R_{ILIM} = 700\ \Omega$	0.30	0.36	0.50	
		TPS2111A	$R_{ILIM} = 400\ \Omega$	0.95	1.25	1.56	
			$R_{ILIM} = 700\ \Omega$	0.47	0.71	0.99	
t_d	Current limit settling time(1)		Time for short-circuit output current to settle within 10% of its steady state value.		1		ms
	Input current at ILIM		$V_{I(ILIM)} = 0$ V, $I_{O(OUT)} = 0$ A	−15		0	µA

(1) Not tested in production.

PARAMETER	TEST CONDITIONS	MIN	TYP	MAX	UNIT
VSNS COMPARATOR					
VSNS threshold voltage	$V_{I(VSNS)} \uparrow$	0.78	0.8	0.82	V
	$V_{I(VSNS)} \downarrow$	0.735	0.755	0.775	
VSNS comparator hysteresis(1)		30		60	mV
Deglitch of VSNS comparator (both ↑↓)(1)		90	150	220	µs
Input current	$0\ V \le V_{I(VSNS)} \le 5.5$ V	−1		1	µA
UVLO					
IN1 and IN2 UVLO	Falling edge	1.15	1.25		V
	Rising edge		1.30	1.35	
IN1 and IN2 UVLO hysteresis(1)		30	57	65	mV
Internal V_{DD} UVLO (the higher of IN1 and IN2)	Falling edge	2.4	2.53		V
	Rising edge		2.58	2.8	
Internal V_{DD} UVLO hysteresis(1)		30	50	75	mV
UVLO deglitch for IN1, IN2(1)	Falling edge		110		µs

(1) Not tested in production.

PARAMETER		TEST CONDITIONS	MIN	TYP	MAX	UNIT
REVERSE CONDUCTION BLOCKING						
$\Delta V_{O(I\_block)}$	Minimum output-to-input voltage difference to block switching	D0 = D1 = high, $V_{I(INx)} = 3.3$ V. Connect OUT to a 5 V supply through a series 1-kΩ resistor. Let D0 = low. Slowly decrease the supply voltage until OUT connects to IN1.	80	100	120	mV

PARAMETER	TEST CONDITIONS	MIN	TYP	MAX	UNIT
THERMAL SHUTDOWN					
Thermal shutdown threshold(1)	TPS211xA is in current limit.	135			°C
Recovery from thermal shutdown(1)	TPS211xA is in current limit.	125			
Hysteresis(1)			10		
IN2−IN1 COMPARATORS					
Hysteresis of IN2−IN1 comparator		0.1		0.2	V
Deglitch of IN2−IN1 comparator (both ↑↓)(1)		10	20	50	µs

(1) Not tested in production.

SWITCHING CHARACTERISTICS

over recommended operating junction temperature range, $V_{I(IN1)} = V_{I(IN2)} = 5.5$ V, $R_{ILIM} = 400\ \Omega$ (unless otherwise noted)

PARAMETER		TEST CONDITIONS		TPS2110A			TPS2111A			UNIT
				MIN	TYP	MAX	MIN	TYP	MAX	
POWER SWITCH										
t_r	Output rise time from an enable(1)	$V_{I(IN1)} = V_{I(IN2)} = 5$ V	$T_J = 25°C$, $C_L = 1\ \mu F$, $I_L = 500$ mA, See Figure 1(a)	0.5	1.0	1.5	1	1.8	3	ms
t_f	Output fall time from a disable(1)	$V_{I(IN1)} = V_{I(IN2)} = 5$ V	$T_J = 25°C$, $C_L = 1\ \mu F$, $I_L = 500$ mA, See Figure 1(a)	0.35	0.5	0.7	0.5	1	2	ms
t_t	Transition time(1)	IN1 to IN2 transition, $V_{I(IN1)} = 3.3$ V, $V_{I(IN2)} = 5$ V	$T_J = 125°C$, $C_L = 10\ \mu F$, $I_L = 500$ mA [Measure transition time as 10−90% rise time or from 3.4 V to 4.8 V on $V_{O(OUT)}$], See Figure 1(b)		40	60		40	60	µs
		IN2 to IN1 transition, $V_{I(IN1)} = 5$ V, $V_{I(IN2)} = 3.3$ V			40	60		40	60	
t_{PLH1}	Turn-on propagation delay from enable(1)	$V_{I(IN1)} = V_{I(IN2)} = 5$ V Measured from enable to 10% of $V_{O(OUT)}$	$T_J = 25°C$, $C_L = 10\ \mu F$, $I_L = 500$ mA, See Figure 1(a)		0.5			1		ms
t_{PHL1}	Turn-off propagation delay from a disable(1)	$V_{I(IN1)} = V_{I(IN2)} = 5$ V, Measured from disable to 90% of $V_{O(OUT)}$	$T_J = 25°C$, $C_L = 10\ \mu F$, $I_L = 500$ mA, See Figure 1(a)		3			5		ms
t_{PLH2}	Switch-over rising propagation delay(1)	Logic 1 to Logic 0 transition on D1, $V_{I(IN1)} = 1.5$ V, $V_{I(IN2)} = 5$ V, $V_{I(D0)} = 0$ V, Measured from D1 to 10% of $V_{O(OUT)}$	$T_J = 25°C$, $C_L = 10\ \mu F$, $I_L = 500$ mA, See Figure 1(c)		40	100		40	100	µs
t_{PHL2}	Switch-over falling propagation delay(1)	Logic 0 to Logic 1 transition on D1, $V_{I(IN1)} = 1.5$V, $V_{I(IN2)} = 5$V, $V_{I(D0)} = 0$ V, Measured from D1 to 90% of $V_{O(OUT)}$	$T_J = 25°C$, $C_L = 10\ \mu F$, $I_L = 500$ mA, See Figure 1(c)	2	3	10	2	5	10	ms

(1) Not tested in production.

TRUTH TABLE

D1	D0	$V_{I(VSNS)} > 0.8V$	$V_{I(IN2)} > V_{I(IN1)}$	OUT(1)
0	0	X	X	IN2
0	1	YES	X	IN1
0	1	NO	NO	IN1
0	1	NO	YES	IN2
1	0	X	X	IN1
1	1	X	X	Hi-Z

X = Don't care.

(1) The under-voltage lockout circuit causes the output to go Hi-Z if the selected power supply does not exceed the IN1/IN2 UVLO, or if neither of the supplies exceeds the internal V_{DD} UVLO.

Terminal Functions

TERMINAL NAME	TERMINAL NO.	I/O	DESCRIPTION
D0	1	I	TTL- and CMOS-compatible input pins. Each pin has a 1-µA pull-up. The truth table shown above illustrates the functionality of D0 and D1.
D1	2	I	
GND	5	I	Ground
IN1	8	I	Primary power switch input. The IN1 switch can be enabled only if the IN1 supply is above the UVLO threshold and at least one supply exceeds the internal V_{DD} UVLO.
IN2	6	I	Secondary power switch input. The IN2 switch can be enabled only if the IN2 supply is above the UVLO threshold and at least one supply exceeds the internal V_{DD} UVLO.
ILIM	4	I	A resistor R_{ILIM} from ILIM to GND sets the current limit I_L to $250/R_{ILIM}$ and $500/R_{ILIM}$ for the TPS2110A and TPS2111A, respectively.
OUT	7	O	Power switch output
VSNS	3	I	In the auto-switching mode (D0 = 1, D1 = 0), an internal power FET connects OUT to IN1 if the VSNS voltage is greater than 0.8 V. Otherwise, the FET connects OUT to the higher of IN1 and IN2. The truth table shown above illustrates the functionality of VSNS.

FUNCTIONAL BLOCK DIAGRAM

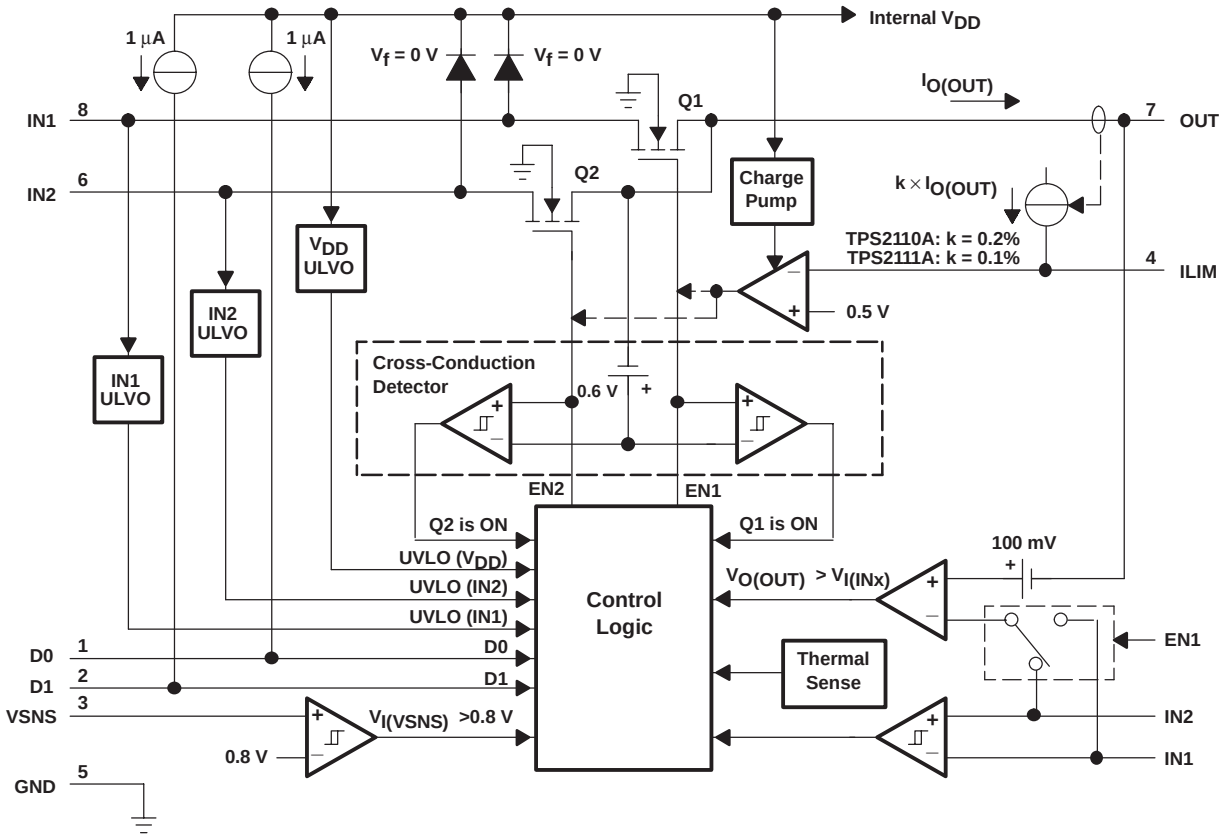

PARAMETER MEASUREMENT INFORMATION

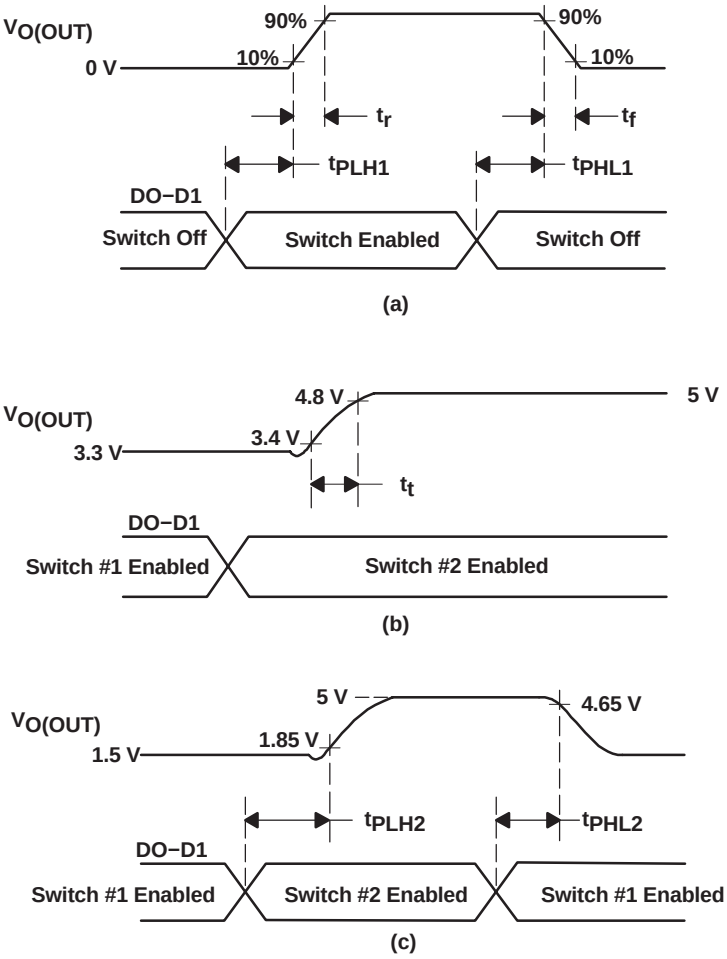

Figure 1. Propagation Delays and Transition Timing Waveforms

TYPICAL CHARACTERISTICS

OUTPUT SWITCHOVER RESPONSE

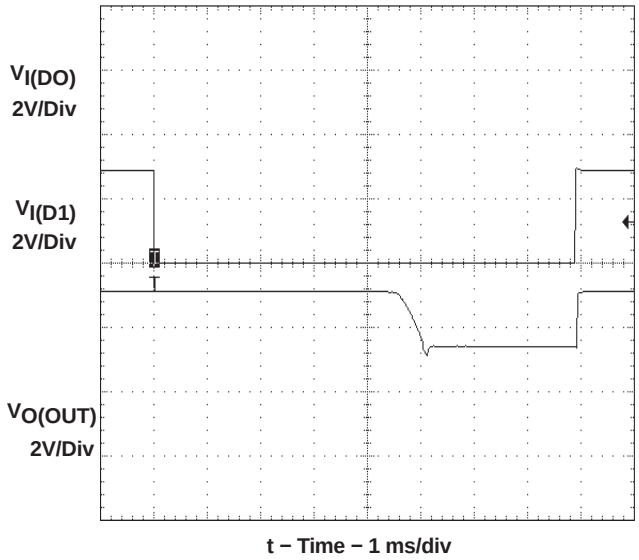

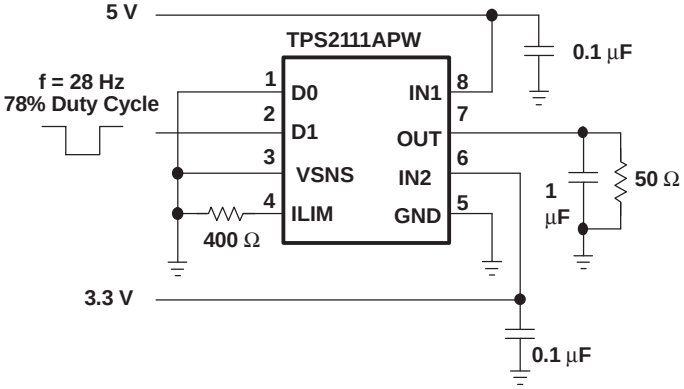

Output Switchover Response Test Circuit

Figure 2

OUTPUT TURN-ON RESPONSE

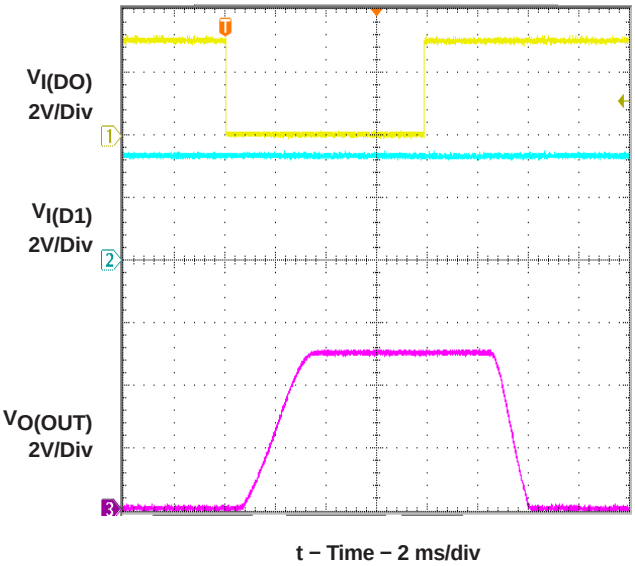

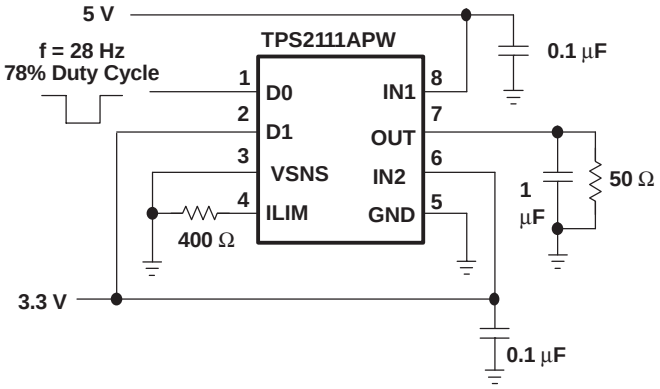

Output Turn-On Response Test Circuit

Figure 3

TYPICAL CHARACTERISTICS

OUTPUT SWITCHOVER VOLTAGE DROOP

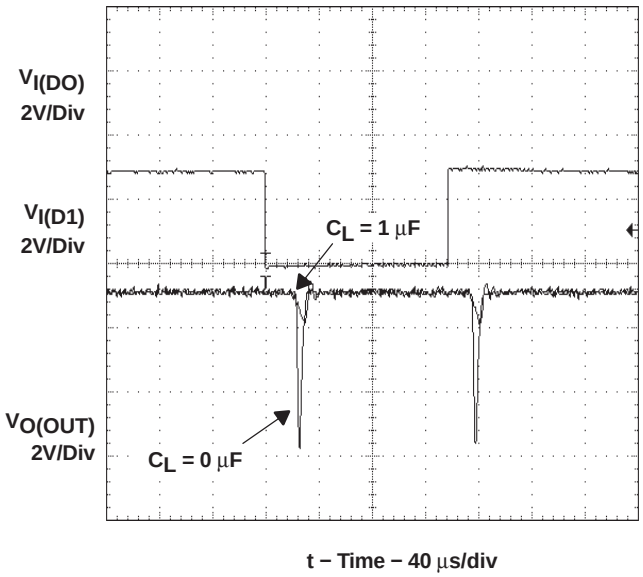

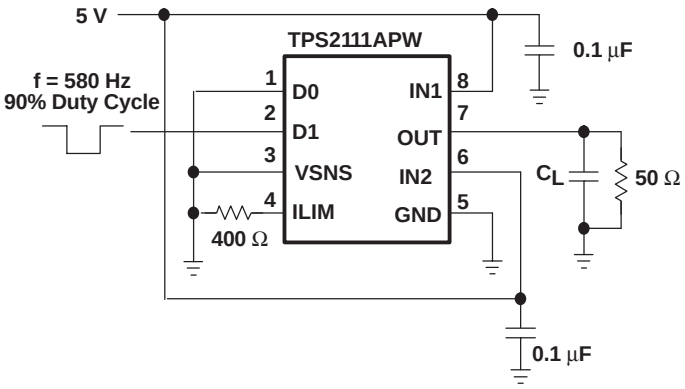

Output Switchover Voltage Droop Test Circuit

Figure 4

TYPICAL CHARACTERISTICS

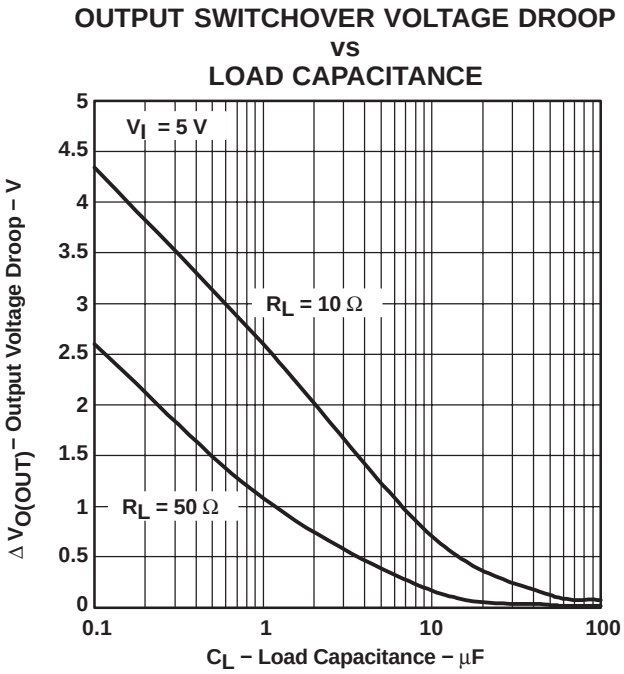

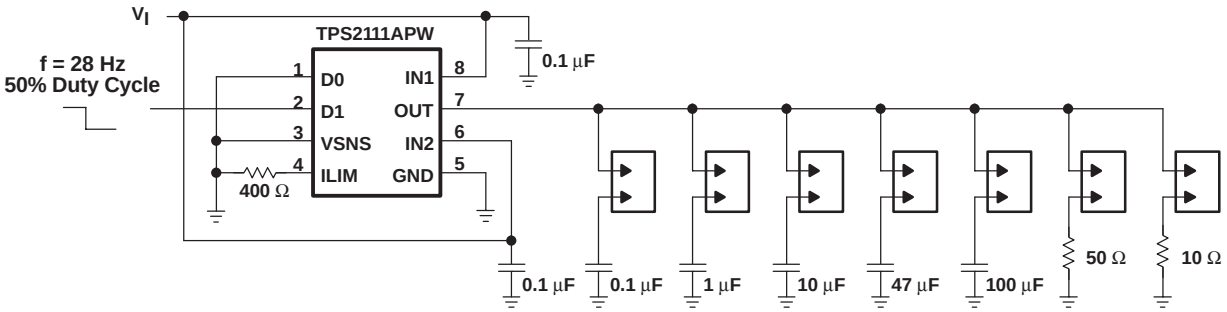

Output Switchover Voltage Droop Test Circuit

Figure 5

TYPICAL CHARACTERISTICS

AUTO SWITCHOVER VOLTAGE DROOP

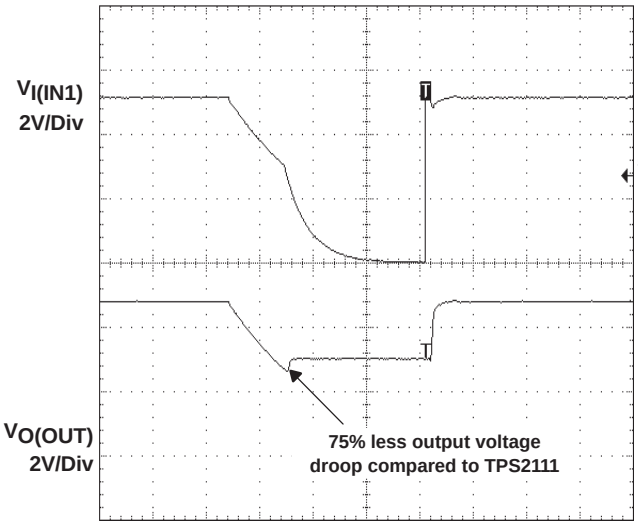

t − Time − 250 µs/div

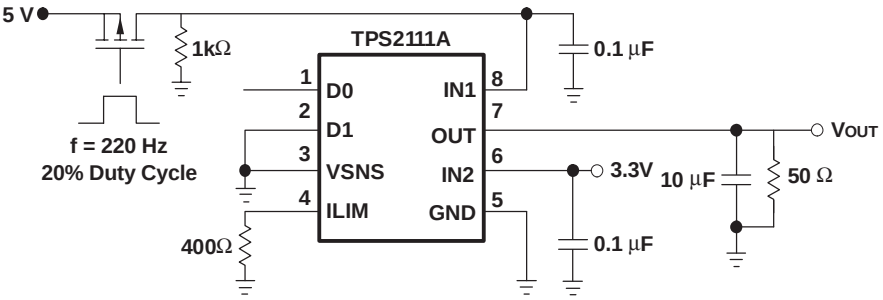

Auto Switchover Voltage Droop Test Circuit

Figure 6

TYPICAL CHARACTERISTICS

INRUSH CURRENT
vs
LOAD CAPACITANCE

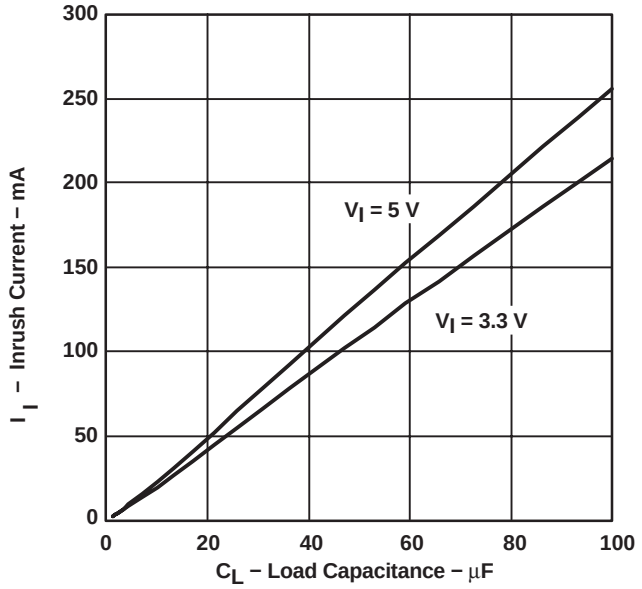

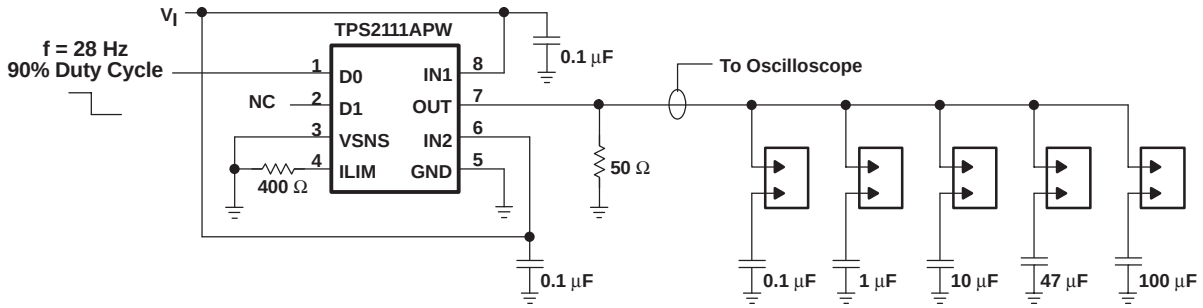

Output Capacitor Inrush Current Test Circuit

Figure 7

TYPICAL CHARACTERISTICS

SWITCH ON-RESISTANCE vs JUNCTION TEMPERATURE

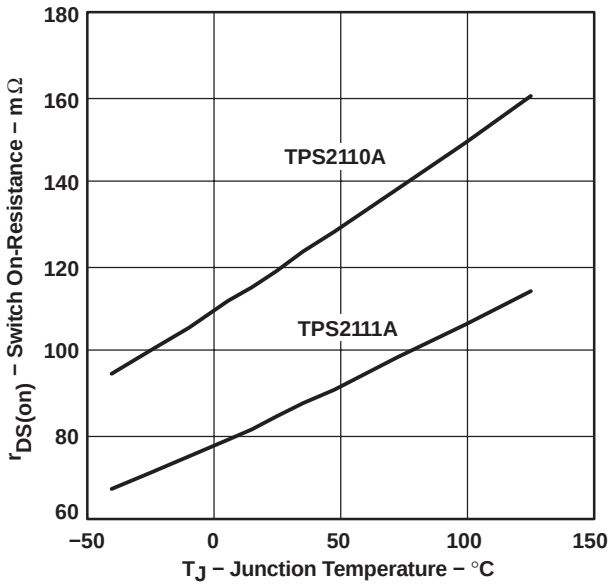

Figure 8

SWITCH ON-RESISTANCE vs SUPPLY VOLTAGE

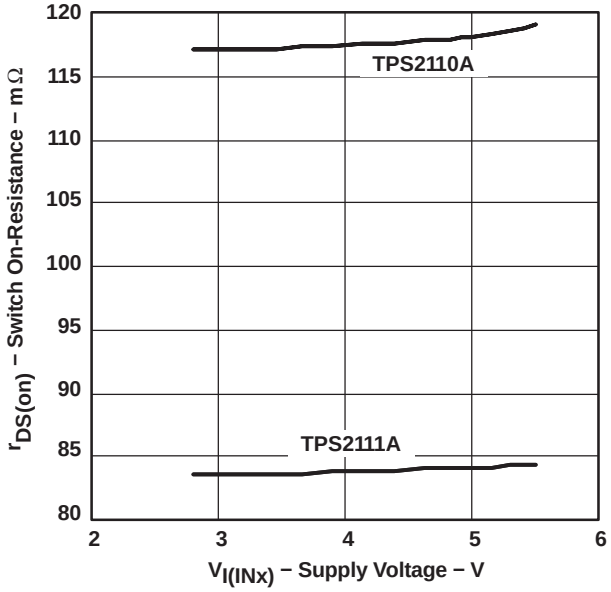

Figure 9

IN1 SUPPLY CURRENT vs SUPPLY VOLTAGE

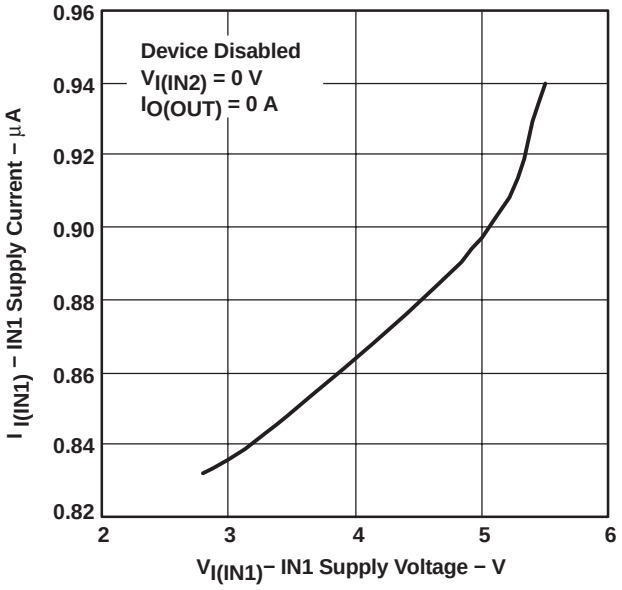

Figure 10

IN1 SUPPLY CURRENT vs SUPPLY VOLTAGE

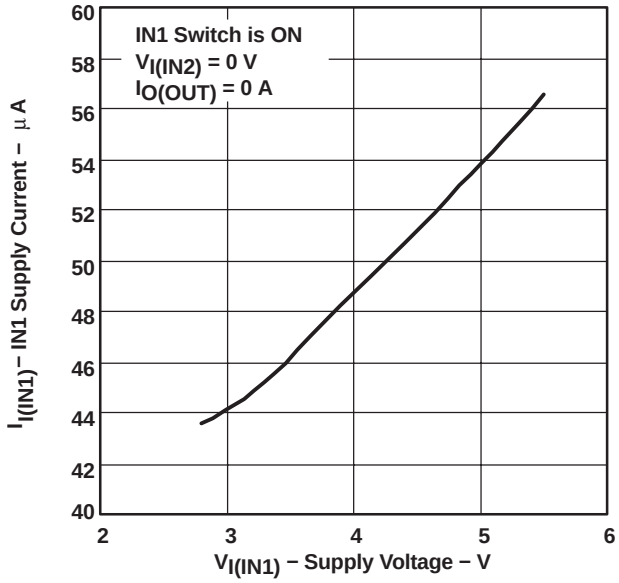

Figure 11

TYPICAL CHARACTERISTICS

SUPPLY CURRENT vs JUNCTION TEMPERATURE

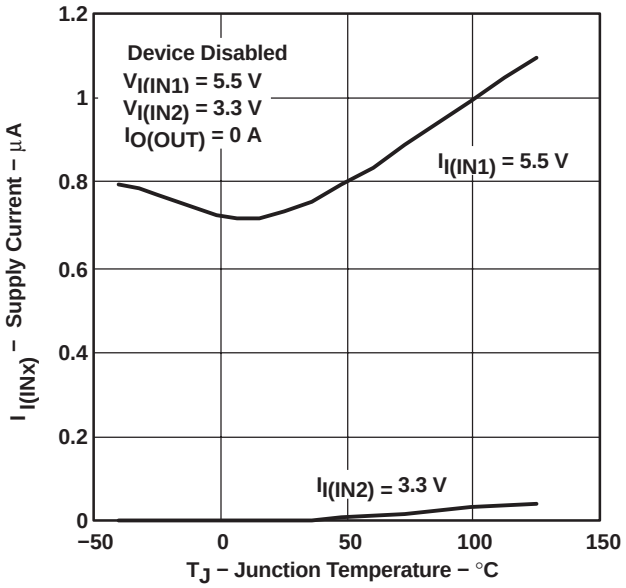

Figure 12

SUPPLY CURRENT vs JUNCTION TEMPERATURE

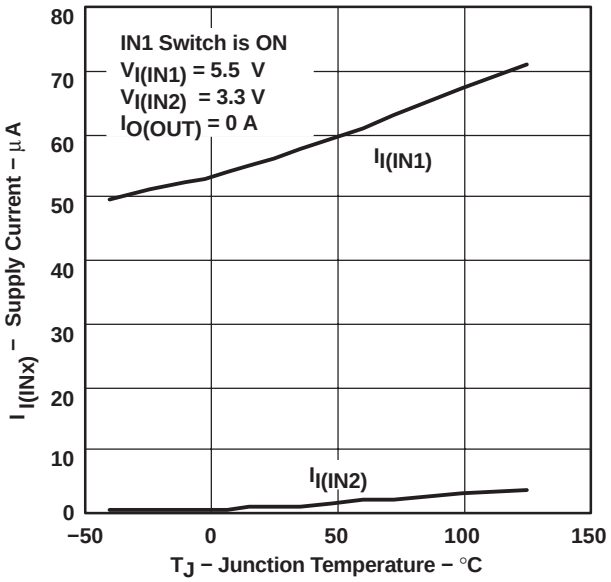

Figure 13

APPLICATION INFORMATION

Some applications have two energy sources, one of which should be used in preference to another. Figure 14 shows a circuit that will connect IN1 to OUT until the voltage at IN1 falls below a user-specified value. Once the voltage on IN1 falls below this value, the TPS211xA will select the higher of the two supplies. This usually means that the TPS211xA will swap to IN2.

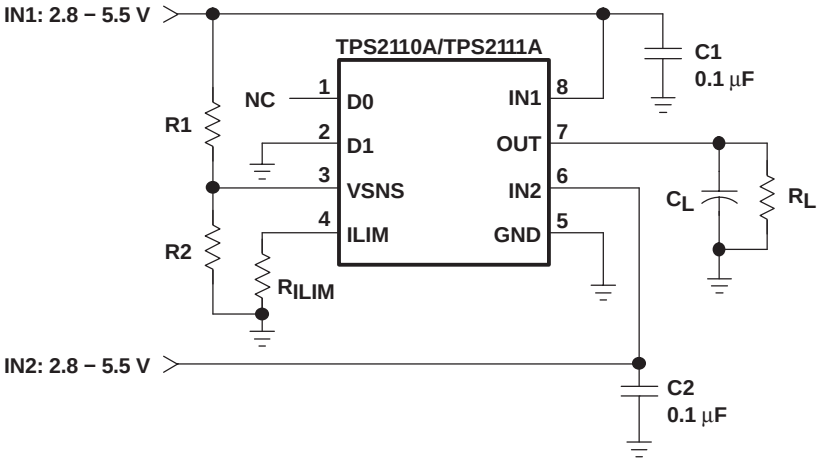

Figure 14. Auto-Selecting for a Dual Power Supply Application

In Figure 15, the multiplexer selects between two power supplies based upon the EN1 logic signal. OUT connects to IN1 if EN1 is logic 1; otherwise, OUT connects to IN2. The logic thresholds for the D1 terminal are compatible with both TTL and CMOS logic.

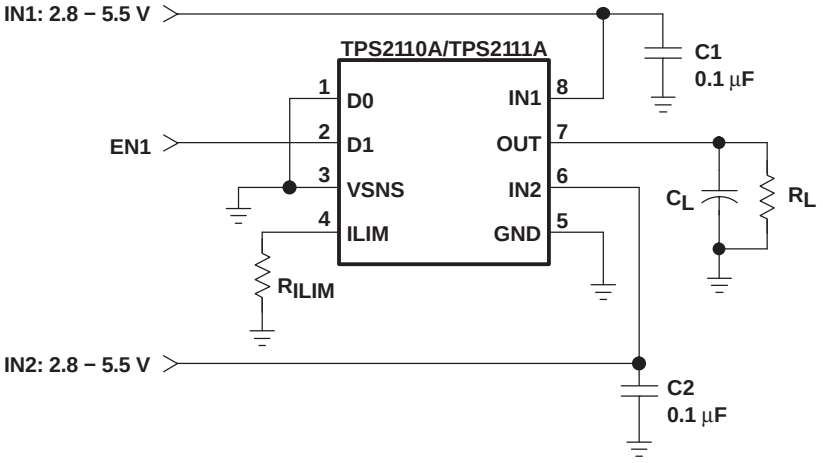

Figure 15. Manually Switching Power Sources

DETAILED DESCRIPTION

AUTO-SWITCHING MODE

D0 equal to logic 1 and D1 equal to logic 0 selects the auto-switching mode. In this mode, OUT connects to IN1 if $V_{I(VSNS)}$ is greater than 0.8 V, otherwise OUT connects to the higher of IN1 and IN2.

The VSNS terminal includes hysteresis equal to 3.75−7.5% of the threshold selected for transition from the primary supply to the higher of the two supplies. This hysteresis helps avoid repeated switching from one supply to the other due to resistive drops.

MANUAL SWITCHING MODE

D0 equal to logic 0 selects the manual-switching mode. In this mode, OUT connects to IN1 if D1 is equal to logic 1, otherwise OUT connects to IN2.

N-CHANNEL MOSFETs

Two internal high-side power MOSFETs implement a single-pole double-throw (SPDT) switch. Digital logic selects the IN1 switch, IN2 switch, or no switch (Hi-Z state). The MOSFETs have no parallel diodes so output-to-input current cannot flow when the FET is off. An integrated comparator prevents turn-on of a FET switch if the output voltage is greater than the input voltage.

CROSS-CONDUCTION BLOCKING

The switching circuitry ensures that both power switches will never conduct at the same time. A comparator monitors the gate-to-source voltage of each power FET and allows a FET to turn on only if the gate-to-source voltage of the other FET is below the turn-on threshold voltage.

REVERSE-CONDUCTION BLOCKING

When the TPS211xA switches from a higher-voltage supply to a lower-voltage supply, current can potentially flow back from the load capacitor into the lower-voltage supply. To minimize such reverse conduction, the TPS211xA will not connect a supply to the output until the output voltage has fallen to within 100 mV of the supply voltage. Once a supply has been connected to the output, it will remain connected regardless of output voltage.

CHARGE PUMP

The higher of supplies IN1 and IN2 powers the internal charge pump. The charge pump provides power to the current limit amplifier and allows the output FET gate voltage to be higher than the IN1 and IN2 supply voltages. A gate voltage that is higher than the source voltage is necessary to turn on the N-channel FET.

CURRENT LIMITING

A resistor R_{ILIM} from ILIM to GND sets the current limit to $250/R_{ILIM}$ and $500/R_{ILIM}$ for the TPS2110A and TPS2111A, respectively. Setting resistor R_{ILIM} equal to zero is not recommended as that disables current limiting.

OUTPUT VOLTAGE SLEW-RATE CONTROL

The TPS211xA slews the output voltage at a slow rate when OUT switches to IN1 or IN2 from the Hi-Z state (see *Truth Table*). A slow slew rate limits the inrush current into the load capacitor. High inrush currents can glitch the voltage bus and cause a system to hang up or reset. It can also cause reliability issues—like pit the connector power contacts, when hot-plugging a load such as a PCI card. The TPS211xA slews the output voltage at a much faster rate when OUT switches between IN1 and IN2. The fast rate minimizes the output voltage droop and reduces the output voltage hold-up capacitance requirement.

PACKAGING INFORMATION

Orderable Device	Status [1]	Package Type	Package Drawing	Pins	Package Qty	Eco Plan [2]	Lead/Ball Finish	MSL Peak Temp [3]
TPS2110APW	ACTIVE	TSSOP	PW	8	150	Green (RoHS & no Sb/Br)	CU NIPDAU	Level-1-260C-UNLIM
TPS2110APWG4	ACTIVE	TSSOP	PW	8	150	Green (RoHS & no Sb/Br)	CU NIPDAU	Level-1-260C-UNLIM
TPS2110APWR	ACTIVE	TSSOP	PW	8	2000	Green (RoHS & no Sb/Br)	CU NIPDAU	Level-1-260C-UNLIM
TPS2110APWRG4	ACTIVE	TSSOP	PW	8	2000	Green (RoHS & no Sb/Br)	CU NIPDAU	Level-1-260C-UNLIM
TPS2111APW	ACTIVE	TSSOP	PW	8	150	Green (RoHS & no Sb/Br)	CU NIPDAU	Level-1-260C-UNLIM
TPS2111APWG4	ACTIVE	TSSOP	PW	8	150	Green (RoHS & no Sb/Br)	CU NIPDAU	Level-1-260C-UNLIM
TPS2111APWR	ACTIVE	TSSOP	PW	8	2000	Green (RoHS & no Sb/Br)	CU NIPDAU	Level-1-260C-UNLIM
TPS2111APWRG4	ACTIVE	TSSOP	PW	8	2000	Green (RoHS & no Sb/Br)	CU NIPDAU	Level-1-260C-UNLIM

[1] The marketing status values are defined as follows:
ACTIVE: Product device recommended for new designs.
LIFEBUY: TI has announced that the device will be discontinued, and a lifetime-buy period is in effect.
NRND: Not recommended for new designs. Device is in production to support existing customers, but TI does not recommend using this part in a new design.
PREVIEW: Device has been announced but is not in production. Samples may or may not be available.
OBSOLETE: TI has discontinued the production of the device.

[2] Eco Plan - The planned eco-friendly classification: Pb-Free (RoHS), Pb-Free (RoHS Exempt), or Green (RoHS & no Sb/Br) - please check http://www.ti.com/productcontent for the latest availability information and additional product content details.
TBD: The Pb-Free/Green conversion plan has not been defined.
Pb-Free (RoHS): TI's terms "Lead-Free" or "Pb-Free" mean semiconductor products that are compatible with the current RoHS requirements for all 6 substances, including the requirement that lead not exceed 0.1% by weight in homogeneous materials. Where designed to be soldered at high temperatures, TI Pb-Free products are suitable for use in specified lead-free processes.
Pb-Free (RoHS Exempt): This component has a RoHS exemption for either 1) lead-based flip-chip solder bumps used between the die and package, or 2) lead-based die adhesive used between the die and leadframe. The component is otherwise considered Pb-Free (RoHS compatible) as defined above.
Green (RoHS & no Sb/Br): TI defines "Green" to mean Pb-Free (RoHS compatible), and free of Bromine (Br) and Antimony (Sb) based flame retardants (Br or Sb do not exceed 0.1% by weight in homogeneous material)

[3] MSL, Peak Temp. -- The Moisture Sensitivity Level rating according to the JEDEC industry standard classifications, and peak solder temperature.

PW (R-PDSO-G)** **PLASTIC SMALL-OUTLINE PACKAGE**

14 PINS SHOWN

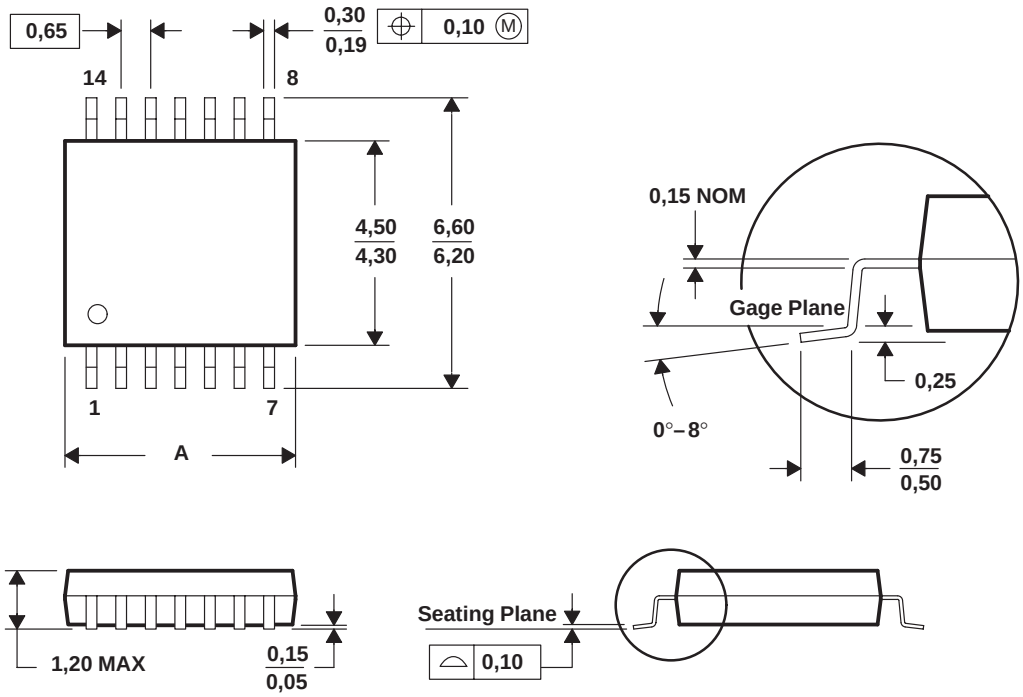

DIM \ PINS **	8	14	16	20	24	28
A MAX	3,10	5,10	5,10	6,60	7,90	9,80
A MIN	2,90	4,90	4,90	6,40	7,70	9,60

4040064/F 01/97

NOTES: A. All linear dimensions are in millimeters.
B. This drawing is subject to change without notice.
C. Body dimensions do not include mold flash or protrusion not to exceed 0,15.
D. Falls within JEDEC MO-153