查询SST49LF008C供应商 捷多邦，专业PCB打样工厂，24小时加急出货

8 Mbit (x16) Multi-Purpose Flash
SST39WF800A

Data Sheet

FEATURES:

- **Organized as 512K x16**
- **Single Voltage Read and Write Operations**
  - 1.65-1.95V
- **Superior Reliability**
  - Endurance: 100,000 Cycles (typical)
  - Greater than 100 years Data Retention
- **Low Power Consumption (typical values at 5 MHz)**
  - Active Current: 5 mA (typical)
  - Standby Current: 5 µA (typical)
- **Sector-Erase Capability**
  - Uniform 2 KWord sectors
- **Block-Erase Capability**
  - Uniform 32 KWord blocks
- **Fast Read Access Time**
  - 90 ns
- **Latched Address and Data**
- **Fast Erase and Word-Program**
  - Sector-Erase Time: 36 ms (typical)
  - Block-Erase Time: 36 ms (typical)
  - Chip-Erase Time: 140 ms (typical)
  - Word-Program Time: 28 µs (typical)
- **Automatic Write Timing**
  - Internal V_{PP} Generation
- **End-of-Write Detection**
  - Toggle Bit
  - Data# Polling
- **CMOS I/O Compatibility**
- **JEDEC Standard**
  - Flash EEPROM Pinouts and command sets
- **Packages Available**
  - 48-ball TFBGA (6mm x 8mm)
  - 48-ball WFBGA (5mm x 6mm) Micro-Package
  - 48-ball XFLGA (5mm x 6mm) Micro-Package
- **All non-Pb (lead-free) devices are RoHS compliant**

PRODUCT DESCRIPTION

The SST39WF800A device is a 512K x16 CMOS Multi-Purpose Flash (MPF) manufactured with SST's proprietary, high performance CMOS SuperFlash technology. The split-gate cell design and thick-oxide tunneling injector attain better reliability and manufacturability compared with alternate approaches. The SST39WF800A writes (Program or Erase) with a 1.65-1.95V power supply. This device conforms to JEDEC standard pin assignments for x16 memories.

Featuring high-performance Word-Program, the SST39WF800A device provides a typical Word-Program time of 28 µsec. The device uses Toggle Bit or Data# Polling to detect the completion of the Program or Erase operation. To protect against inadvertent writes, it has on-chip hardware and software data protection schemes. Designed, manufactured, and tested for a wide spectrum of applications, this device is offered with a guaranteed typical endurance of 100,000 cycles. Data retention is rated at greater than 100 years.

The SST39WF800A device is suited for applications that require convenient and economical updating of program, configuration, or data memory. For all system applications, it significantly improves performance and reliability, while lowering power consumption. It inherently uses less energy during Erase and Program than alternative flash technologies. When programming a flash device, the total energy consumed is a function of the applied voltage, current, and time of application. Since for any given voltage range, the SuperFlash technology uses less current to program and has a shorter erase time, the total energy consumed during any Erase or Program operation is less than alternative flash technologies. These devices also improve flexibility while lowering the cost for program, data, and configuration storage applications.

The SuperFlash technology provides fixed Erase and Program times, independent of the number of Erase/Program cycles that have occurred. Therefore the system software or hardware does not have to be modified or de-rated as is necessary with alternative flash technologies, whose Erase and Program times increase with accumulated Erase/Program cycles.

To meet surface mount requirements, the SST39WF800A is offered in a 48-ball TFBGA package and a 48-ball Micro-Package. See Figure 3 and Figure 2 for pin assignments.

找PDF 维库一下 pdf.dzsc.com

Device Operation

Commands are used to initiate the memory operation functions of the device. Commands are written to the device using standard microprocessor write sequences. A command is written by asserting WE# low while keeping CE# low. The address bus is latched on the falling edge of WE# or CE#, whichever occurs last. The data bus is latched on the rising edge of WE# or CE#, whichever occurs first.

Read

The Read operation of the SST39WF800A is controlled by CE# and OE#, both have to be low for the system to obtain data from the outputs. CE# is used for device selection. When CE# is high, the chip is deselected and only standby power is consumed. OE# is the output control and is used to gate data from the output pins. The data bus is in high impedance state when either CE# or OE# is high. Refer to the Read cycle timing diagram for further details (Figure 4).

Word-Program Operation

The SST39WF800A is programmed on a word-by-word basis. Before programming, the sector where the word exists must be fully erased. The Program operation is accomplished in three steps. The first step is the three-byte load sequence for Software Data Protection. The second step is to load word address and word data. During the Word-Program operation, the addresses are latched on the falling edge of either CE# or WE#, whichever occurs last. The data is latched on the rising edge of either CE# or WE#, whichever occurs first. The third step is the internal Program operation which is initiated after the rising edge of the fourth WE# or CE#, whichever occurs first. The Program operation, once initiated, will be completed within 40 µs. See Figures 5 and 6 for WE# and CE# controlled Program operation timing diagrams and Figure 15 for flowcharts. During the Program operation, the only valid reads are Data# Polling and Toggle Bit. During the internal Program operation, the host is free to perform additional tasks. Any commands issued during the internal Program operation are ignored.

Sector/Block-Erase Operation

The Sector- (or Block-) Erase operation allows the system to erase the device on a sector-by-sector (or block-by-block) basis. The SST39WF800A offers both Sector-Erase and Block-Erase mode. The sector architecture is based on uniform sector size of 2 KWord. The Block-Erase mode is based on uniform block size of 32 KWord. The Sector-Erase operation is initiated by executing a six-byte command sequence with Sector-Erase command (30H) and sector address (SA) in the last bus cycle. The Block-Erase operation is initiated by executing a six-byte command sequence with Block-Erase command (50H) and block address (BA) in the last bus cycle. The sector or block address is latched on the falling edge of the sixth WE# pulse, while the command (30H or 50H) is latched on the rising edge of the sixth WE# pulse. The internal Erase operation begins after the sixth WE# pulse. The End-of-Erase operation can be determined using either Data# Polling or Toggle Bit methods. See Figures 9 and 10 for timing waveforms. Any commands issued during the Sector- or Block-Erase operation are ignored.

Chip-Erase Operation

The SST39WF800A provides a Chip-Erase operation, which allows the user to erase the entire memory array to the “1” state. This is useful when the entire device must be quickly erased.

The Chip-Erase operation is initiated by executing a six-byte command sequence with Chip-Erase command (10H) at address 5555H in the last byte sequence. The Erase operation begins with the rising edge of the sixth WE# or CE#, whichever occurs first. During the Erase operation, the only valid read is Toggle Bit or Data# Polling. See Table 4 for the command sequence, Figure 8 for timing diagram, and Figure 18 for the flowchart. Any commands issued during the Chip-Erase operation are ignored.

Write Operation Status Detection

The SST39WF800A provides two software means to detect the completion of a write (Program or Erase) cycle, in order to optimize the system write cycle time. The software detection includes two status bits: Data# Polling (DQ_7) and Toggle Bit (DQ_6). The End-of-Write detection mode is enabled after the rising edge of WE#, which initiates the internal Program or Erase operation.

The actual completion of the nonvolatile Write is asynchronous with the system; therefore, either a Data# Polling or Toggle Bit read may be simultaneous with the completion of the Write cycle. If this occurs, the system may possibly get an erroneous result, i.e., valid data may appear to conflict with either DQ_7 or DQ_6. In order to prevent spurious rejection, if an erroneous result occurs, the software routine should include a loop to read the accessed location an additional two (2) times. If both Reads are valid, then the device has completed the Write cycle, otherwise the rejection is valid.

Data# Polling (DQ_7)

When the SST39WF800A is in the internal Program operation, any attempt to read DQ_7 will produce the complement of the true data. Once the Program operation is completed, DQ_7 will produce true data. Note that even though DQ_7 may have valid data immediately following the completion of an internal Write operation, the remaining data outputs may still be invalid: valid data on the entire data bus will appear in subsequent successive Read cycles after an interval of 1 µs. During internal Erase operation, any attempt to read DQ_7 will produce a ‘0’. Once the internal Erase operation is completed, DQ_7 will produce a ‘1’. The Data# Polling is valid after the rising edge of fourth WE# (or CE#) pulse for Program operation. For Sector-, Block- or Chip-Erase, the Data# Polling is valid after the rising edge of sixth WE# (or CE#) pulse. See Figure 7 for Data# Polling timing diagram and Figure 16 for a flowchart.

Toggle Bit (DQ_6)

During the internal Program or Erase operation, any consecutive attempts to read DQ_6 will produce alternating 1s and 0s, i.e., toggling between 1 and 0. When the internal Program or Erase operation is completed, the DQ_6 bit will stop toggling. The device is then ready for the next operation. The Toggle Bit is valid after the rising edge of fourth WE# (or CE#) pulse for Program operation. For Sector-, Block- or Chip-Erase, the Toggle Bit is valid after the rising edge of sixth WE# (or CE#) pulse. See Figure 0-1 for Toggle Bit timing diagram and Figure 16 for a flowchart.

Data Protection

The SST39WF800A provides both hardware and software features to protect nonvolatile data from inadvertent writes.

Hardware Data Protection

Noise/Glitch Protection: A WE# or CE# pulse of less than 5 ns will not initiate a write cycle.

V_{DD} Power Up/Down Detection: The Write operation is inhibited when V_{DD} is less than 1.0V.

Write Inhibit Mode: Forcing OE# low, CE# high, or WE# high will inhibit the Write operation. This prevents inadvertent writes during power-up or power-down.

Software Data Protection (SDP)

The SST39WF800A provides the JEDEC approved Software Data Protection scheme for all data alteration operations, i.e., Program and Erase. Any Program operation requires the inclusion of the three-byte sequence. The three-byte load sequence is used to initiate the Program operation, providing optimal protection from inadvertent Write operations, e.g., during the system power-up or power-down. Any Erase operation requires the inclusion of six-byte sequence. This group of devices are shipped with the Software Data Protection permanently enabled. See Table 4 for the specific software command codes. During SDP command sequence, invalid commands will abort the device to Read mode within T_{RC}. The contents of DQ_{15}-DQ_8 can be V_{IL} or V_{IH}, but no other value, during any SDP command sequence.

Common Flash Memory Interface (CFI)

The SST39WF800A also contains the CFI information to describe the characteristics of the device. In order to enter the CFI Query mode, the system must write three-byte sequence, same as Software ID Entry command with 98H (CFI Query command) to address 5555H in the last byte sequence. See Figure 11 for the timing diagram. Once the device enters the CFI Query mode, the system can read CFI data at the addresses given in Tables 5 through 7. The system must write the CFI Exit command to return to Read mode from the CFI Query mode.

Product Identification

The Product Identification mode identifies the devices as the SST39WF800A and manufacturer as SST. This mode may be accessed by software operations. Users may use the Software Product Identification operation to identify the part (i.e., using the device ID) when using multiple manufacturers in the same socket. For details, see Table 4 for software operation, Figure 0-2 for the Software ID Entry and Read timing diagram, and Figure 17 for the Software ID Entry command sequence flowchart.

TABLE 1: Product Identification Table

	Address	Data
Manufacturer's ID	0000H	00BFH
Device ID		
SST39WF800A	0001H	273FH

T1.0 1258

Product Identification Mode Exit/ CFI Mode Exit

In order to return to the standard Read mode, the Software Product Identification mode must be exited. Exit is accomplished by issuing the Software ID Exit command sequence, which returns the device to the Read mode. This command may also be used to reset the device to the Read mode after any inadvertent transient condition that apparently causes the device to behave abnormally, e.g., not read correctly. Please note that the Software ID Exit/ CFI Exit command is ignored during an internal Program or Erase operation. See Table 4 for software command codes, Figure 12 for timing waveform, and Figure 17 for a flowchart.

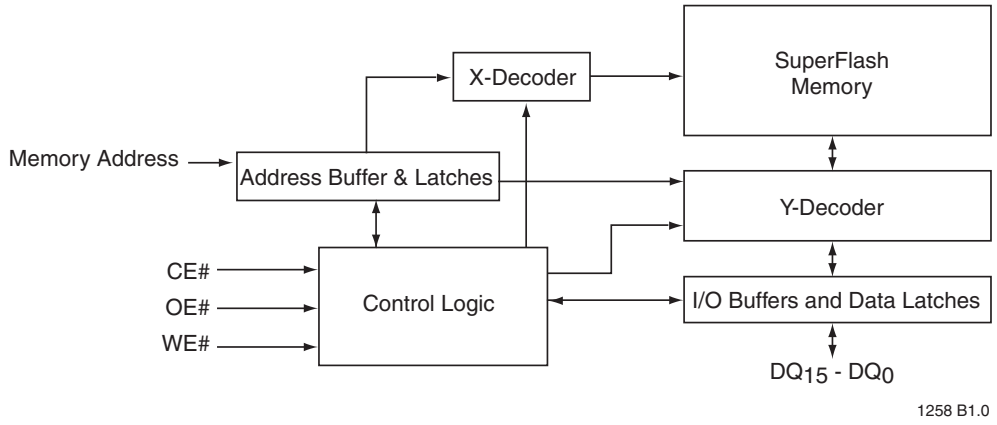

FIGURE 1: Functional Block Diagram

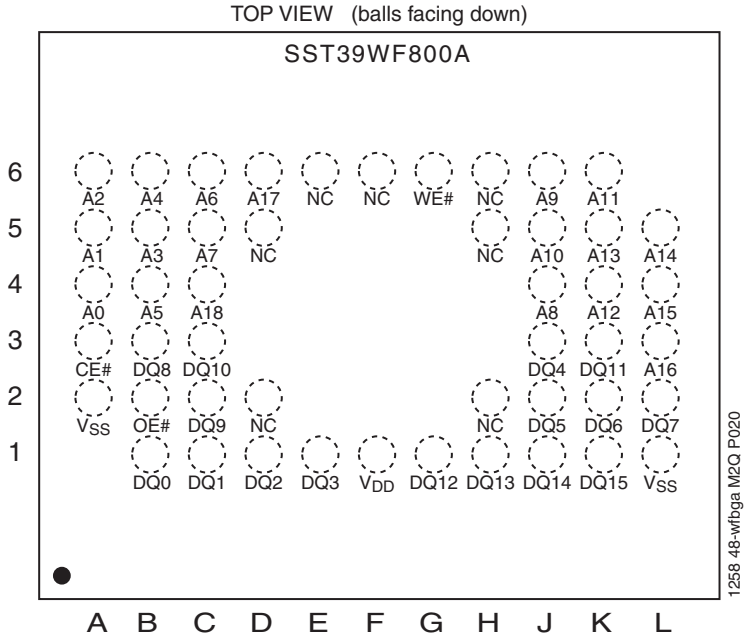

FIGURE 2: Pin Assignments for 48-Ball WFBGA and 48-Ball XFLGA

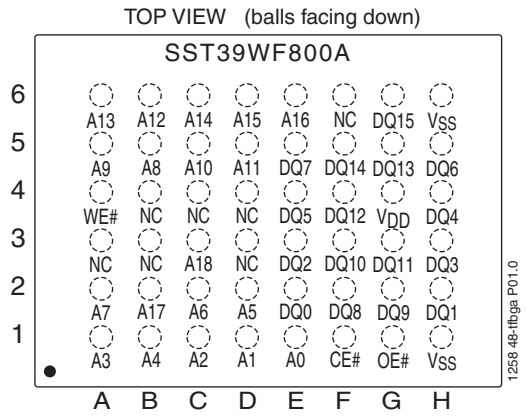

FIGURE 3: Pin Assignments for 48-ball TFBGA

TABLE 2: Pin Description

Symbol	Pin Name	Functions
A_{MS}[1]-A_0	Address Inputs	To provide memory addresses. During Sector-Erase A_{MS}-A_{11} address lines will select the sector. During Block-Erase A_{MS}-A_{15} address lines will select the block.
DQ_{15}-DQ_0	Data Input/output	To output data during Read cycles and receive input data during Write cycles. Data is internally latched during a Write cycle. The outputs are in tri-state when OE# or CE# is high.
CE#	Chip Enable	To activate the device when CE# is low.
OE#	Output Enable	To gate the data output buffers.
WE#	Write Enable	To control the Write operations.
V_{DD}	Power Supply	To provide power supply voltage: 1.65-1.95V for SST39WF800A
V_{SS}	Ground	
NC	No Connection	Unconnected pins.

T2.0 1258

1. A_{MS} = Most significant address
   A_{MS} = A_{18} for SST39WF800A

TABLE 3: Operation Modes Selection

Mode	CE#	OE#	WE#	DQ	Address
Read	V_{IL}	V_{IL}	V_{IH}	D_{OUT}	A_{IN}
Program	V_{IL}	V_{IH}	V_{IL}	D_{IN}	A_{IN}
Erase	V_{IL}	V_{IH}	V_{IL}	X[1]	Sector or Block address, XXH for Chip-Erase
Standby	V_{IH}	X	X	High Z	X
Write Inhibit	X	V_{IL}	X	High Z/ D_{OUT}	X
	X	X	V_{IH}	High Z/ D_{OUT}	X
Product Identification					
Software Mode	V_{IL}	V_{IL}	V_{IH}		See Table 4

T3.0 1258

1. X can be V_{IL} or V_{IH}, but no other value.

TABLE 4: Software Command Sequence

Command Sequence	1st Bus Write Cycle		2nd Bus Write Cycle		3rd Bus Write Cycle		4th Bus Write Cycle		5th Bus Write Cycle		6th Bus Write Cycle	
	Addr[1]	Data[2]	Addr[1]	Data[2]	Addr[1]	Data[2]	Addr[1]	Data[2]	Addr[1]	Data[2]	Addr[1]	Data[2]
Word-Program	5555H	AAH	2AAAH	55H	5555H	A0H	WA[3]	Data				
Sector-Erase	5555H	AAH	2AAAH	55H	5555H	80H	5555H	AAH	2AAAH	55H	SA_X[4]	30H
Block-Erase	5555H	AAH	2AAAH	55H	5555H	80H	5555H	AAH	2AAAH	55H	BA_X[4]	50H
Chip-Erase	5555H	AAH	2AAAH	55H	5555H	80H	5555H	AAH	2AAAH	55H	5555H	10H
Software ID Entry[5,6]	5555H	AAH	2AAAH	55H	5555H	90H						
CFI Query Entry[5]	5555H	AAH	2AAAH	55H	5555H	98H						
Software ID Exit[7]/ CFI Exit	XXH	F0H										
Software ID Exit[7]/ CFI Exit	5555H	AAH	2AAAH	55H	5555H	F0H						

T4.0 1258

1. Address format A_{14}-A_0 (Hex), Addresses A_{MS}-A_{15} can be V_{IL} or V_{IH}, but no other value, for the Command sequence.
   A_{MS} = Most significant address
   A_{MS} = A_{18} for SST39WF800A
2. DQ_{15}-DQ_8 can be V_{IL} or V_{IH}, but no other value, for the Command sequence
3. WA = Program word address
4. SA_X for Sector-Erase; uses A_{MS}-A_{11} address lines
   BA_X for Block-Erase; uses A_{MS}-A_{15} address lines
5. The device does not remain in Software Product ID mode if powered down.
6. With A_{MS}-A_1 = 0; SST Manufacturer's ID = 00BFH, is read with A_0 = 0,
   SST39WF800A Device ID = 273FH, is read with A_0 = 1.
7. Both Software ID Exit operations are equivalent

TABLE 5: CFI Query Identification String[1] for SST39WF800A

Address	Data	Data
10H	0051H	Query Unique ASCII string "QRY"
11H	0052H	
12H	0059H	
13H	0001H	Primary OEM command set
14H	0007H	
15H	0000H	Address for Primary Extended Table
16H	0000H	
17H	0000H	Alternate OEM command set (00H = none exists)
18H	0000H	
19H	0000H	Address for Alternate OEM extended Table (00H = none exits)
1AH	0000H	

T5.0 1258

1. Refer to CFI publication 100 for more details.

TABLE 6: System Interface Information for SST39WF800A

Address	Data	Data
1BH	0016H	V_{DD} Min (Program/Erase) DQ_7-DQ_4: Volts, DQ_3-DQ_0: 100 millivolts
1CH	0020H	V_{DD} Max (Program/Erase) DQ_7-DQ_4: Volts, DQ_3-DQ_0: 100 millivolts
1DH	0000H	V_{PP} min (00H = no V_{PP} pin)
1EH	0000H	V_{PP} max (00H = no V_{PP} pin)
1FH	0005H	Typical time out for Word-Program 2^N µs (2^5 = 32 µs)
20H	0000H	Typical time out for min size buffer program 2^N µs (00H = not supported)
21H	0005H	Typical time out for individual Sector/Block-Erase 2^N ms (2^5 = 32 ms)
22H	0007H	Typical time out for Chip-Erase 2^N ms (2^7 = 128 ms)
23H	0001H	Maximum time out for Word-Program 2^N times typical (2^1 x 2^5 = 64 µs)
24H	0000H	Maximum time out for buffer program 2^N times typical
25H	0001H	Maximum time out for individual Sector/Block-Erase 2^N times typical (2^1 x 2^5 = 64 ms)
26H	0001H	Maximum time out for Chip-Erase 2^N times typical (2^1 x 2^7 = 256 ms)

T6.0 1258

TABLE 7: Device Geometry Information for SST39WF800A

Address	Data	Data
27H	0014H	Device size = 2^N Byte (14H = 20; 2^{20} = 1 MByte)
28H 29H	0001H 0000H	Flash Device Interface description; 0001H = x16-only asynchronous interface
2AH 2BH	0000H 0000H	Maximum number of byte in multi-byte write = 2^N (00H = not supported)
2CH	0002H	Number of Erase Sector/Block sizes supported by device
2DH 2EH 2FH 30H	00FFH 0000H 0010H 0000H	Sector Information (y + 1 = Number of sectors; z x 256B = sector size) y = 255 + 1 = 256 sectors (00FFH = 255) z = 16 x 256 Bytes = 4 KByte/sector (0010H = 16)
31H 32H 33H 34H	000FH 0000H 0000H 0001H	Block Information (y + 1 = Number of blocks; z x 256B = block size) y = 15 + 1 = 16 blocks (000FH = 15) z = 256 x 256 Bytes = 64 KByte/block (0100H = 256)

T7.0 1258

Absolute Maximum Stress Ratings (Applied conditions greater than those listed under "Absolute Maximum Stress Ratings" may cause permanent damage to the device. This is a stress rating only and functional operation of the device at these conditions or conditions greater than those defined in the operational sections of this data sheet is not implied. Exposure to absolute maximum stress rating conditions may affect device reliability.)

Temperature Under Bias . . . . . -55°C to +125°C
Storage Temperature . . . . . -65°C to +150°C
D. C. Voltage on Any Pin to Ground Potential . . . . . -0.5V to V_{DD}+0.5V
Transient Voltage (<20 ns) on Any Pin to Ground Potential . . . . . -2.0V to V_{DD}+2.0V
Voltage on A_9 Pin to Ground Potential . . . . . -0.5V to 11V
Package Power Dissipation Capability (T_A = 25°C) 1.0W
Surface Mount Solder Reflow Temperature[1] . . . . . 260°C for 10 seconds
Output Short Circuit Current[2] . . . . . 50 mA

1. Excluding certain with-Pb 32-PLCC units, all packages are 260°C capable in both non-Pb and with-Pb solder versions.
   Certain with-Pb 32-PLCC package types are capable of 240°C for 10 seconds; please consult the factory for the latest information.
2. Outputs shorted for no more than one second. No more than one output shorted at a time.

Operating Range

Range	Ambient Temp	V_{DD}
Commercial	0°C to +70°C	1.65-1.95V
Industrial	-40°C to +85°C	1.65-1.95V

AC Conditions of Test

Input Rise/Fall Time . . . . . 5 ns
Output Load . . . . . C_L = 30 pF
See Figures 13 and 14

TABLE 8: DC Operating Characteristics, V_{DD} = 1.65-1.95V[1]

Symbol	Parameter	Limits			Test Conditions
		Min	Max	Units	
I_{DD}	Power Supply Current				Address input=V_{ILT}/V_{IHT}, at f=5 MHz, V_{DD}=V_{DD} Max
	Read		15	mA	CE#=V_{IL}, OE#=WE#=V_{IH}, all I/Os open
	Program and Erase		20	mA	CE#=WE#=V_{IL}, OE#=V_{IH}
I_{SB}	Standby V_{DD} Current[2]		20	µA	CE#=V_{DD}, V_{DD}=V_{DD} Max
I_{LI}	Input Leakage Current		1	µA	V_{IN}=GND to V_{DD}, V_{DD}=V_{DD} Max
I_{LO}	Output Leakage Current		1	µA	V_{OUT}=GND to V_{DD}, V_{DD}=V_{DD} Max
V_{IL}	Input Low Voltage		0.2V_{DD}		V_{DD}=V_{DD} Min
V_{IH}	Input High Voltage	0.8V_{DD}		V	V_{DD}=V_{DD} Max
V_{OL}	Output Low Voltage		0.1	V	I_{OL}=100 µA, V_{DD}=V_{DD} Min
V_{OH}	Output High Voltage	V_{DD}-0.1		V	I_{OH}=-100 µA, V_{DD}=V_{DD} Min

T8.0 1258

1. Typical conditions for the Active Current shown on the front page of the data sheet are average values at 25°C (room temperature), and V_{DD} = 1.8V. Not 100% tested.
2. 20 µA is the maximum I_{SB} for all SST39WF800A commercial grade devices. 30 µA is the maximum I_{SB} for all 39WF800A industrial grade devices. For all SST39WF800A commercial and industrial devices, I_{SB} typical is under 5 µA.

TABLE 9: Recommended System Power-up Timings

Symbol	Parameter	Minimum	Units
$T_{PU-READ}$[1]	Power-up to Read Operation	100	µs
$T_{PU-WRITE}$[1]	Power-up to Program/Erase Operation	100	µs

T9.0 1258

1. This parameter is measured only for initial qualification and after a design or process change that could affect this parameter.

TABLE 10: Capacitance (T_A = 25°C, f=1 MHz, other pins open)

Parameter	Description	Test Condition	Maximum
$C_{I/O}$[1]	I/O Pin Capacitance	$V_{I/O}$ = 0V	12 pF
C_{IN}[1]	Input Capacitance	V_{IN} = 0V	6 pF

T10.0 1258

1. This parameter is measured only for initial qualification and after a design or process change that could affect this parameter.

TABLE 11: Reliability Characteristics

Symbol	Parameter	Minimum Specification	Units	Test Method
N_{END}[1,2]	Endurance	10,000	Cycles	JEDEC Standard A117
T_{DR}[1]	Data Retention	100	Years	JEDEC Standard A103
I_{LTH}[1]	Latch Up	100 + I_{DD}	mA	JEDEC Standard 78

T11.0 1258

1. This parameter is measured only for initial qualification and after a design or process change that could affect this parameter.
2. N_{END} endurance rating is qualified as a 10,000 cycle minimum for the whole device. A sector- or block-level rating would result in a higher minimum specification.

AC CHARACTERISTICS

TABLE 12: Read Cycle Timing Parameters

Symbol	Parameter	Min	Max	Units
T_{RC}	Read Cycle Time	90		ns
T_{CE}	Chip Enable Access Time		90	ns
T_{AA}	Address Access Time		90	ns
T_{OE}	Output Enable Access Time		50	ns
T_{CLZ}[1]	CE# Low to Active Output	0		ns
T_{OLZ}[1]	OE# Low to Active Output	0		ns
T_{CHZ}[1]	CE# High to High-Z Output		40	ns
T_{OHZ}[1]	OE# High to High-Z Output		40	ns
T_{OH}[1]	Output Hold from Address Change	0		ns

T12.0 1258

1. This parameter is measured only for initial qualification and after a design or process change that could affect this parameter.

TABLE 13: Program/Erase Cycle Timing Parameters

Symbol	Parameter	Min	Max	Units
T_{BP}	Word-Program Time		40	µs
T_{AS}	Address Setup Time	0		ns
T_{AH}	Address Hold Time	50		ns
T_{CS}	WE# and CE# Setup Time	0		ns
T_{CH}	WE# and CE# Hold Time	0		ns
T_{OES}	OE# High Setup Time	0		ns
T_{OEH}	OE# High Hold Time	10		ns
T_{CP}	CE# Pulse Width	50		ns
T_{WP}	WE# Pulse Width	50		ns
T_{WPH}[1]	WE# Pulse Width High	30		ns
T_{CPH}[1]	CE# Pulse Width High	30		ns
T_{DS}	Data Setup Time	50		ns
T_{DH}[1]	Data Hold Time	0		ns
T_{IDA}[1]	Software ID Access and Exit Time		150	ns
T_{SE}	Sector-Erase		50	ms
T_{BE}	Block-Erase		50	ms
T_{SCE}	Chip-Erase		200	ms

T13.0 1258

1. This parameter is measured only for initial qualification and after a design or process change that could affect this parameter.

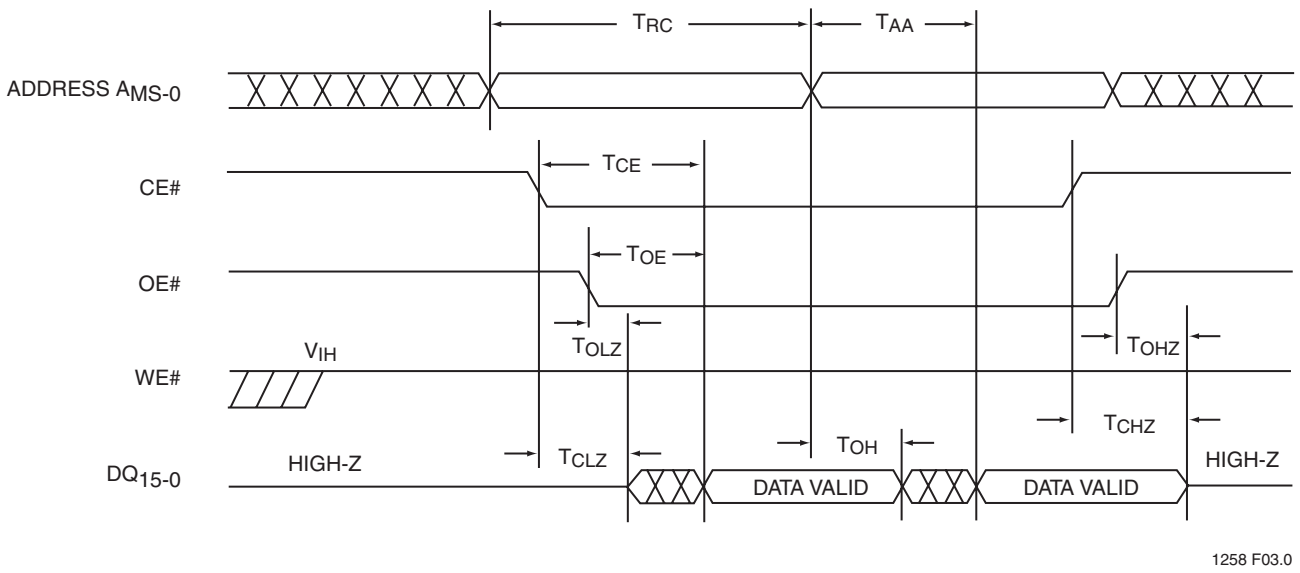

Note: A_{MS} = Most significant address
A_{MS} = A_{18} for SST39WF800A

FIGURE 4: Read Cycle Timing Diagram

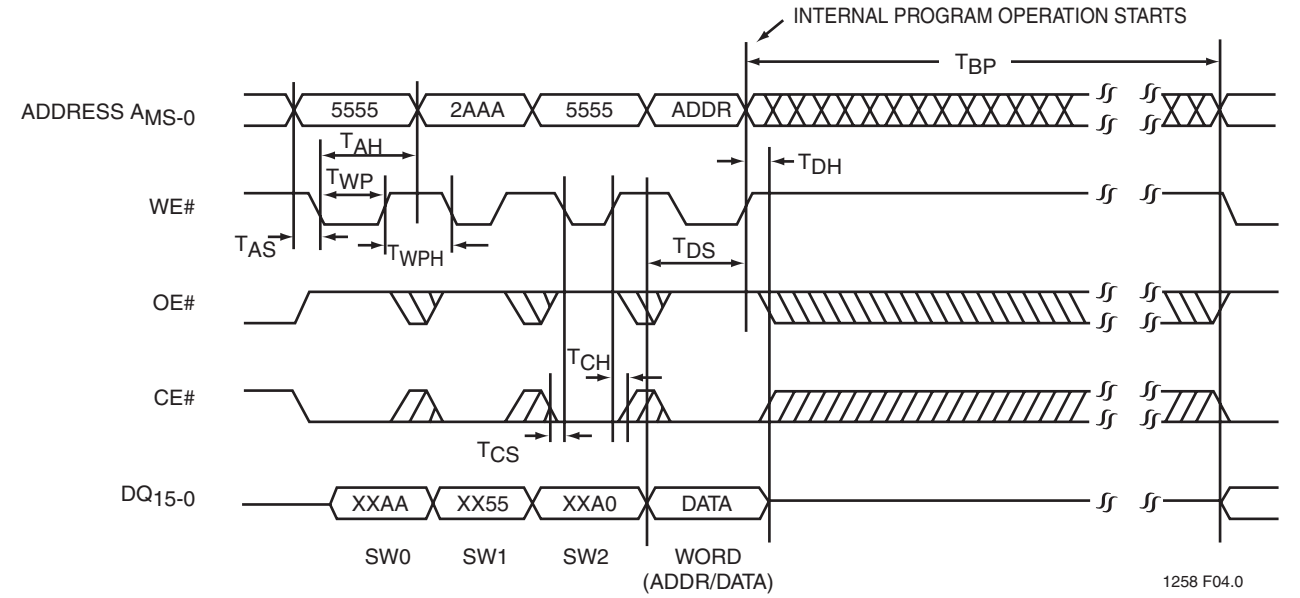

Note: A_{MS} = Most significant address
A_{MS} = A_{18} for SST39WF800A
X can be V_{IL} or V_{IH}, but no other value.

FIGURE 5: WE# Controlled Program Cycle Timing Diagram

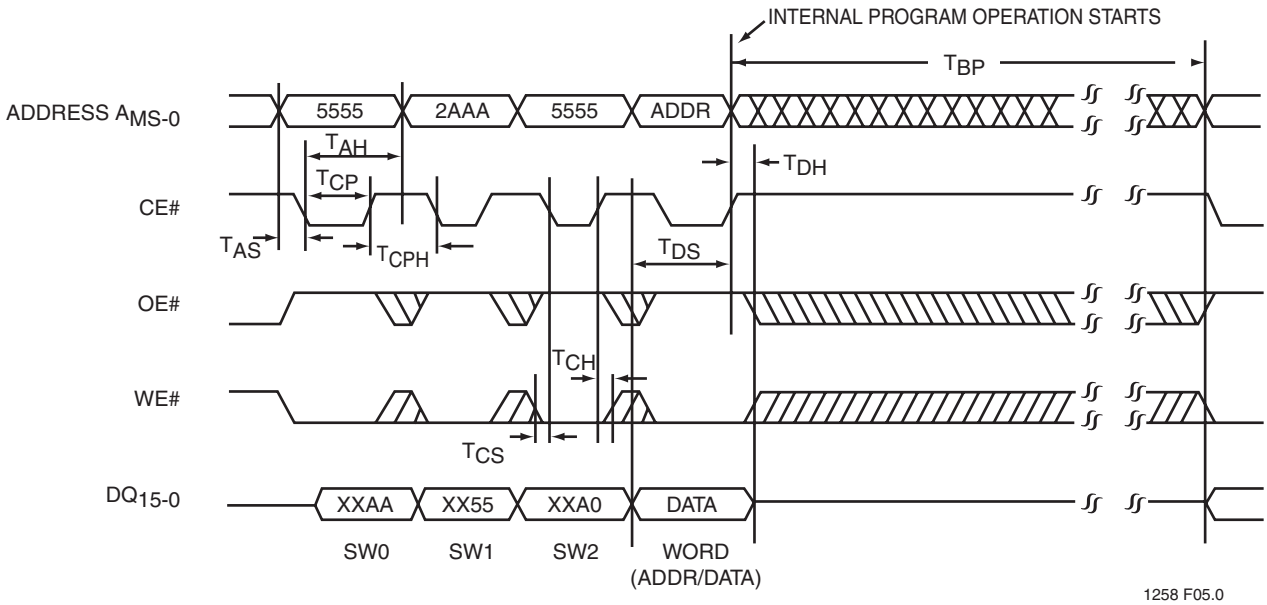

Note: A_{MS} = Most significant address
A_{MS} = A_{18} for SST39WF800A
X can be V_{IL} or V_{IH}, but no other value.

FIGURE 6: CE# Controlled Program Cycle Timing Diagram

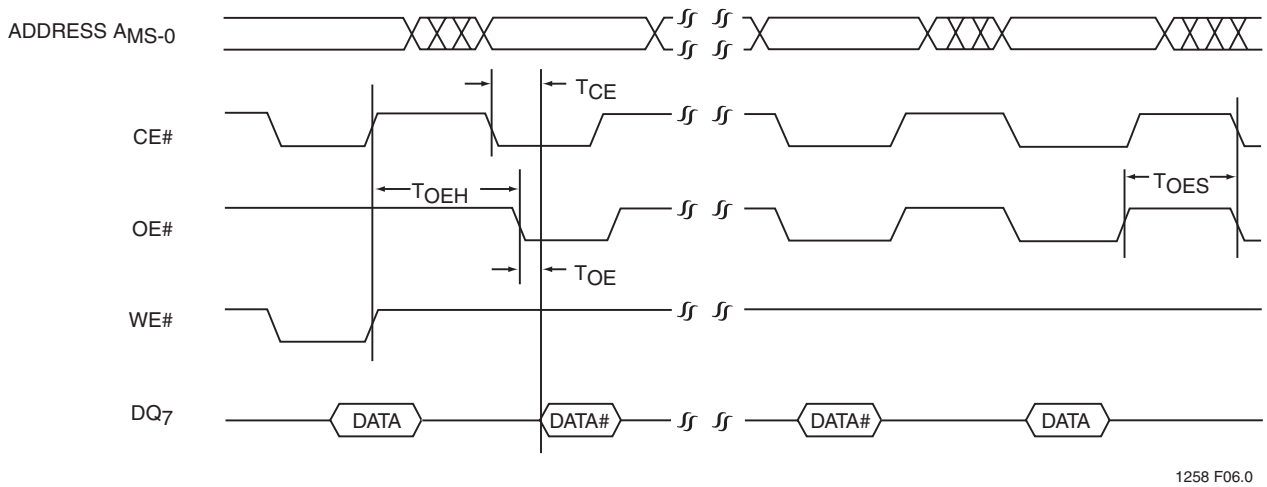

Note: A_{MS} = Most significant address
A_{MS} = A_{18} for SST39WF800A

FIGURE 7: Data# Polling Timing Diagram

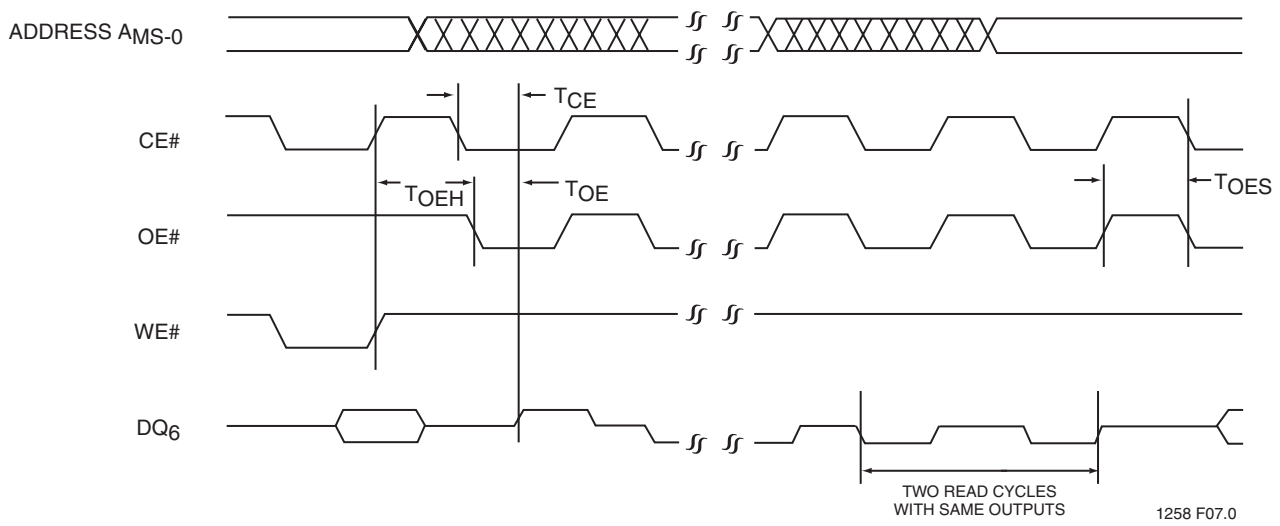

Note: A_{MS} = Most significant address
A_{MS} = A_{18} for SST39WF800A

FIGURE 0-1: TOGGLE BIT TIMING DIAGRAM

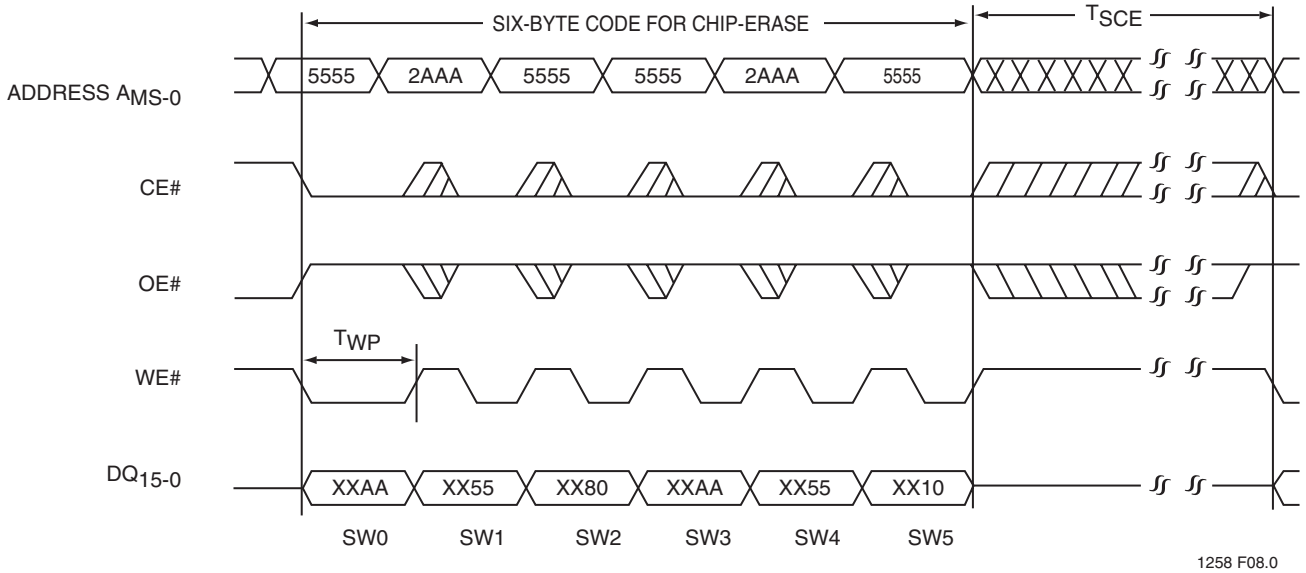

Note: This device also supports CE# controlled Chip-Erase operation The WE# and CE# signals are interchangeable as long as minimum timings are met. (See Table 13)
A_{MS} = Most significant address
A_{MS} = A_{18} for SST39WF800A
X can be V_{IL} or $V_{IH,}$ but no other value.

FIGURE 8: WE# Controlled Chip-Erase Timing Diagram

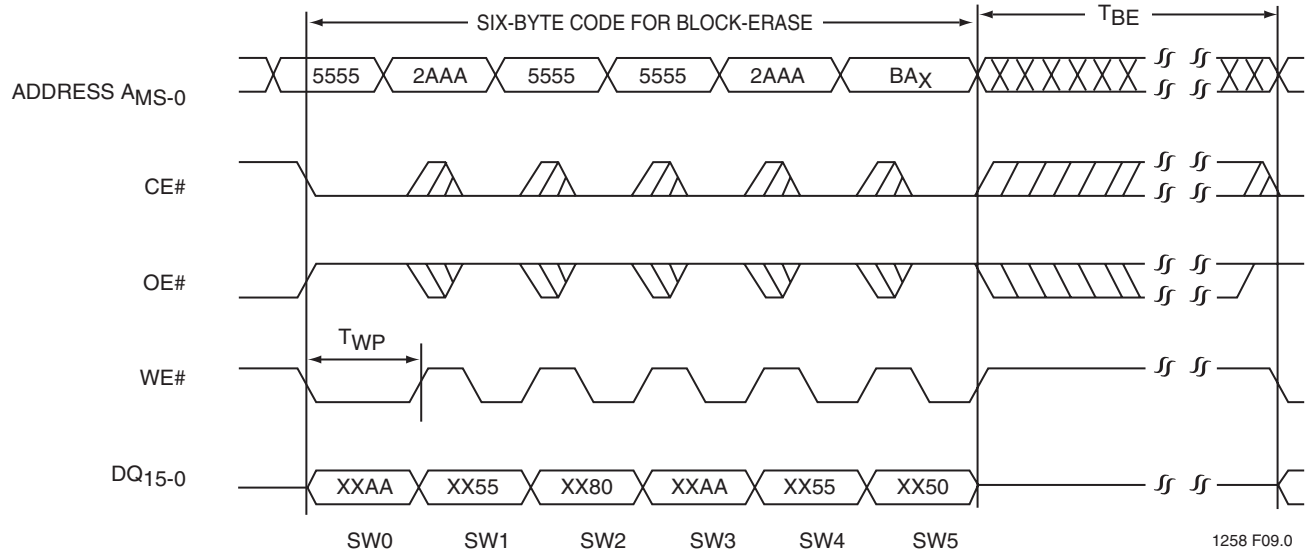

Note: This device also supports CE# controlled Block-Erase operation The WE# and CE# signals are interchangeable as long as minimum timings are met. (See Table 13)
A_{MS} = Most significant address
A_{MS} = A_{18} for SST39WF800A
X can be V_{IL} or V_{IH}, but no other value.

FIGURE 9: WE# Controlled Block-Erase Timing Diagram

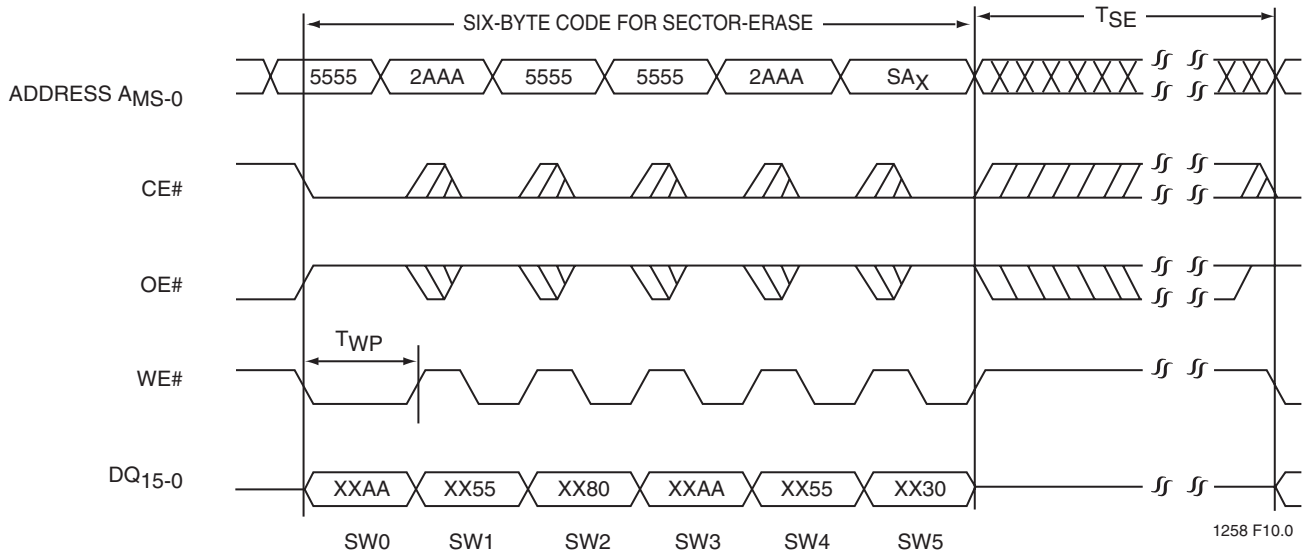

Note: This device also supports CE# controlled Sector-Erase operation The WE# and CE# signals are interchangeable as long as minimum timings are met. (See Table 13)
A_{MS} = Most significant address
A_{MS} = A_{18} for SST39WF800A
X can be V_{IL} or V_{IH}, but no other value.

FIGURE 10: WE# Controlled Sector-Erase Timing Diagram

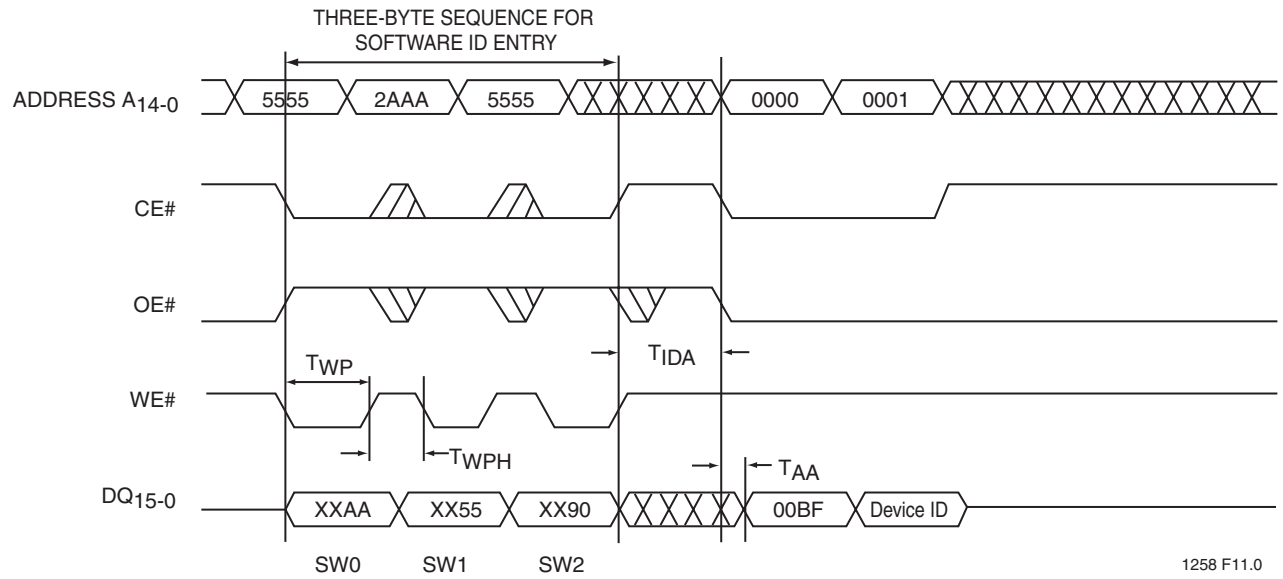

Note: Device ID = 273FH for SST39WF800A
X can be V_{IL} or $V_{IH,}$ but no other value.

FIGURE 0-2: SOFTWARE ID ENTRY AND READ

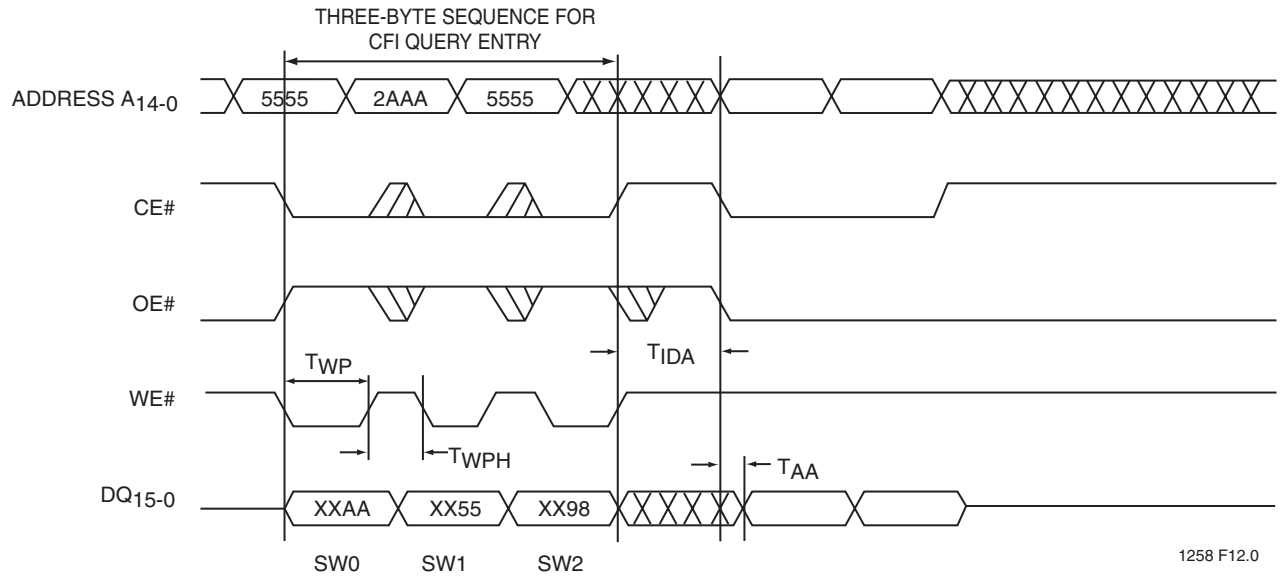

Note: X can be V_{IL} or $V_{IH,}$ but no other value.

FIGURE 11: CFI Query Entry and Read

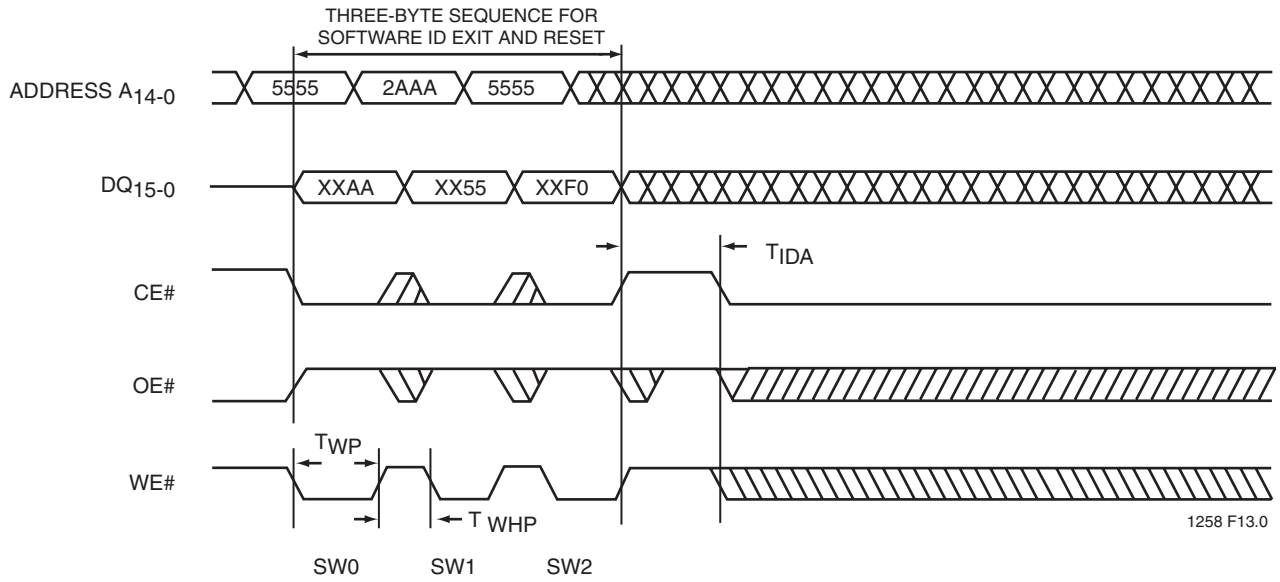

Note: X can be V_{IL} or V_{IH}, but no other value.

FIGURE 12: Software ID Exit/CFI Exit

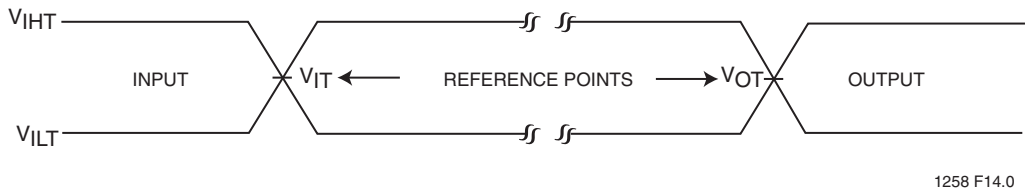

AC test inputs are driven at V_{IHT} (V_{DD}) for a logic "1" and V_{ILT} (V_{SS}) for a logic "0". Measurement reference points for inputs and outputs are V_{IT} (0.5 V_{DD}) and V_{OT} (0.5 V_{DD}). Input rise and fall times are (10% ↔ 90%) <5 ns.

Note: V_{IT} - V_{INPUT} Test
V_{OT} - V_{OUTPUT} Test
V_{IHT} - V_{INPUT} HIGH Test
V_{ILT} - V_{INPUT} LOW Test

FIGURE 13: AC Input/Output Reference Waveforms

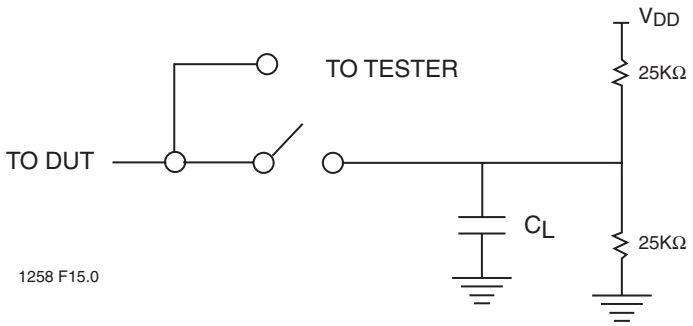

FIGURE 14: A Test Load Example

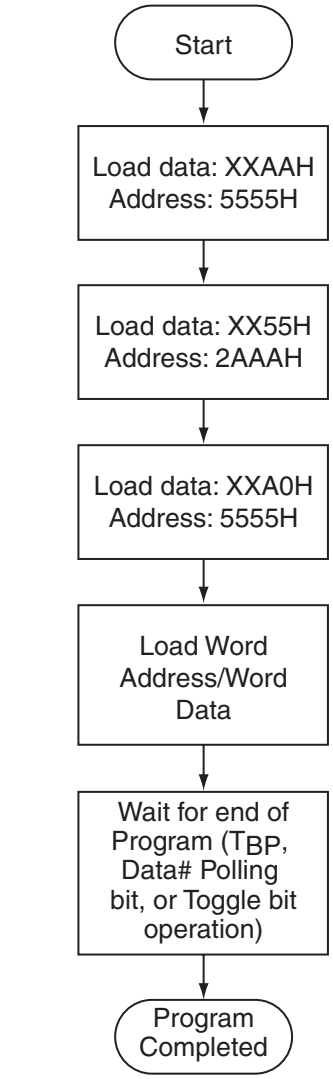

Note: X can be V_{IL} or V_{IH}, but no other value.

1258 F16.0

FIGURE 15: Word-Program Algorithm

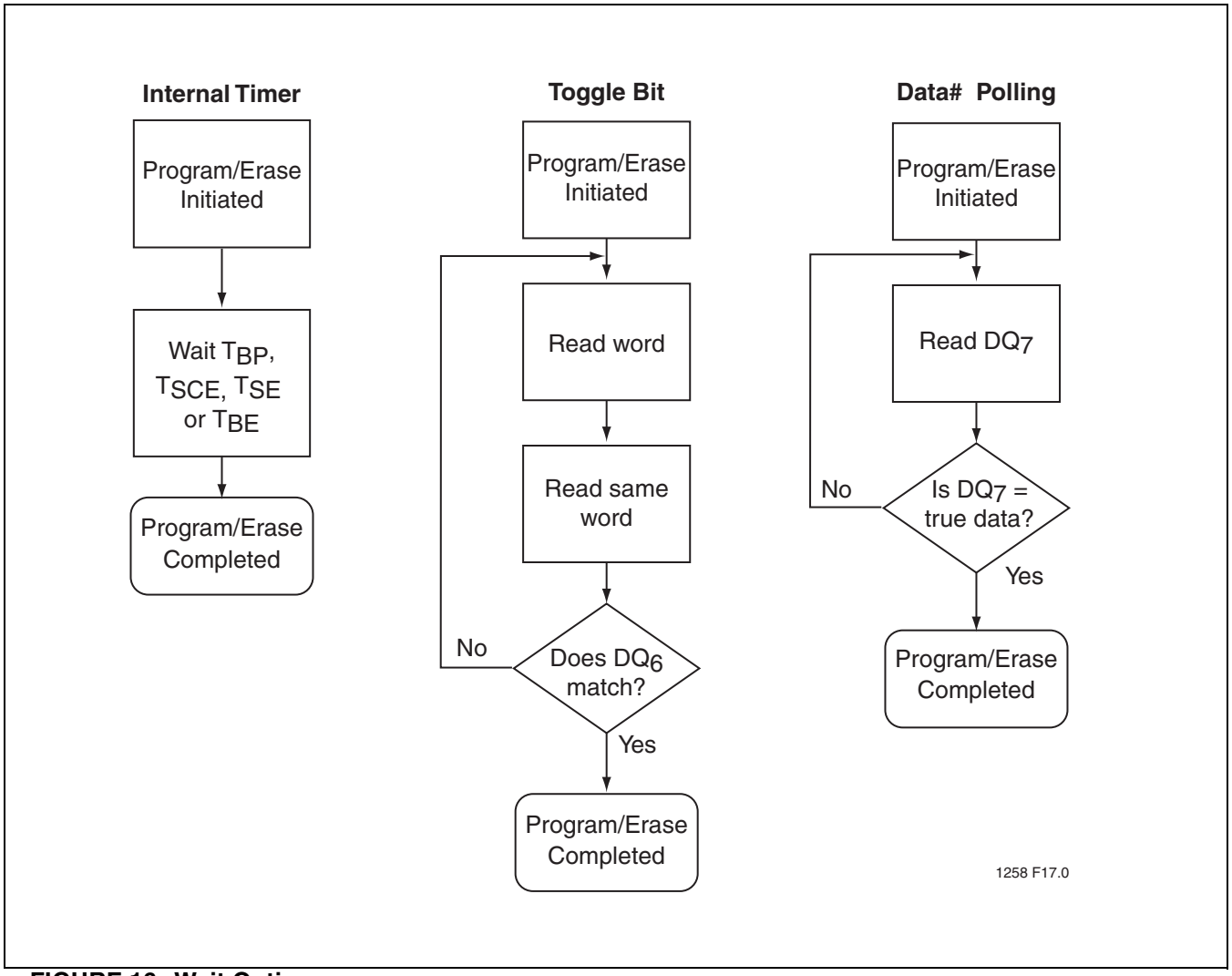

FIGURE 16: Wait Options

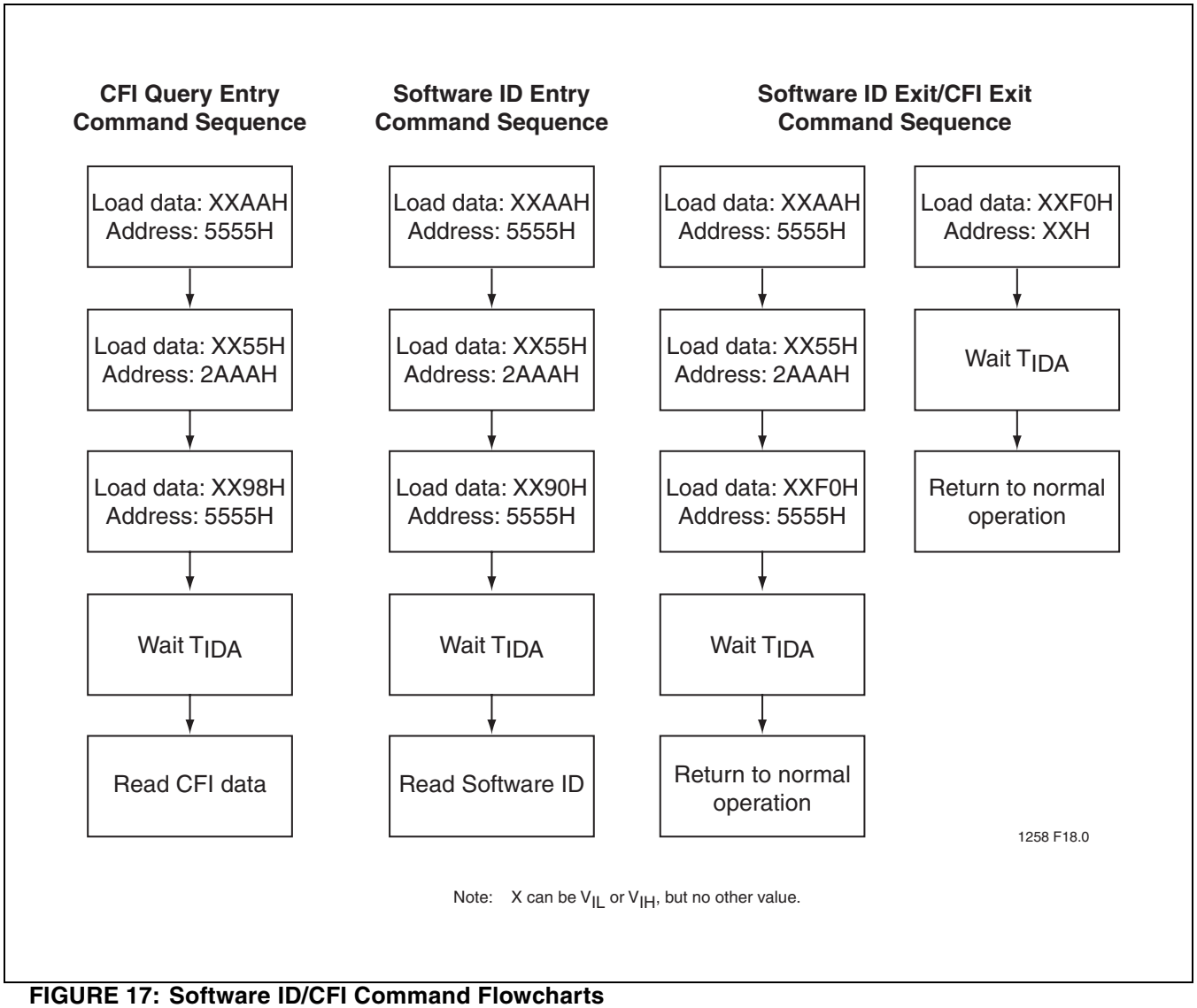

FIGURE 17: Software ID/CFI Command Flowcharts

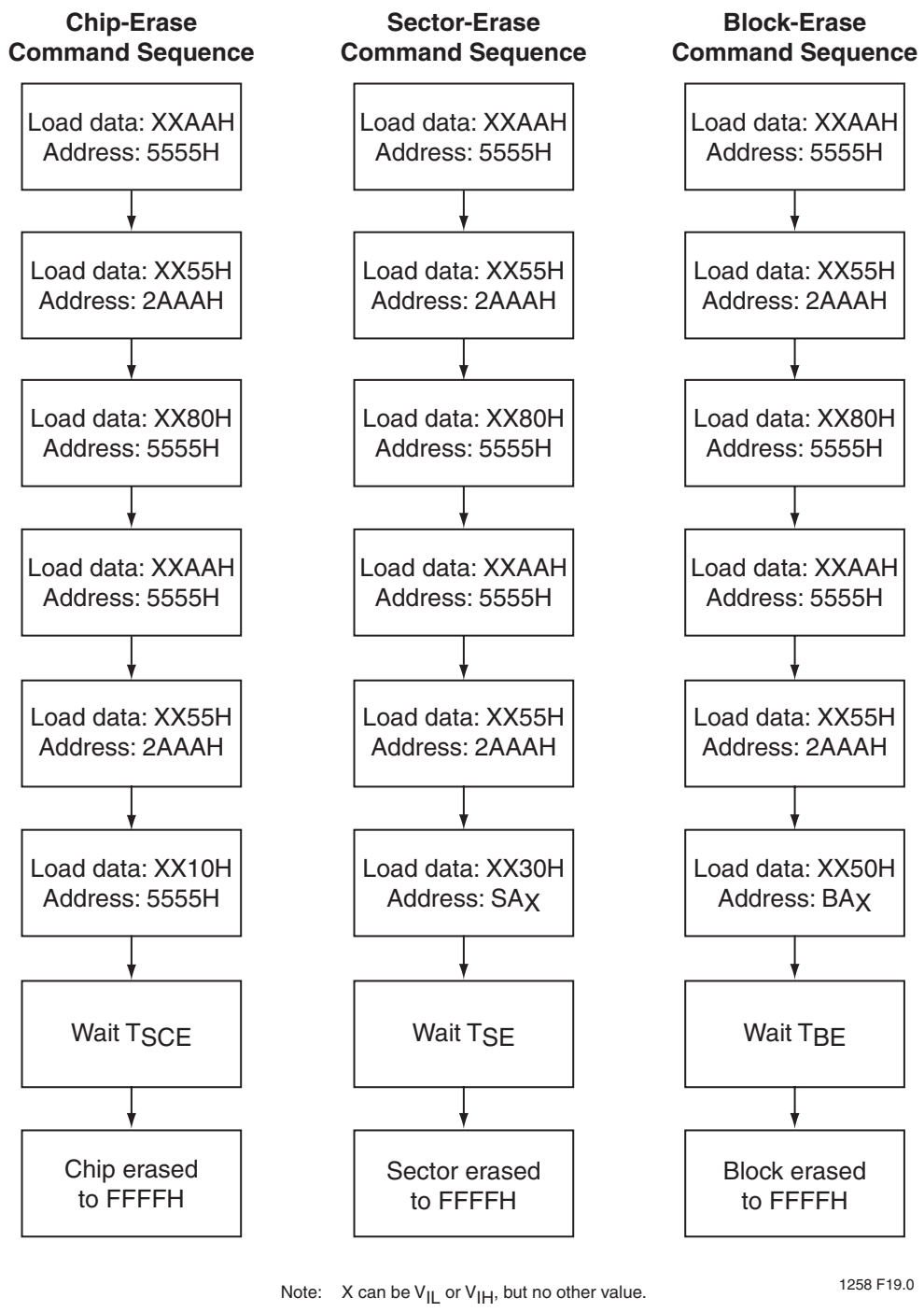

Note: X can be V_{IL} or V_{IH}, but no other value.

1258 F19.0

FIGURE 18: Erase Command Sequence

PRODUCT ORDERING INFORMATION

SST 39 WF 800A - 90 - 4C - B3K E
XX XX XXXX - XX - XX - XXX X

Environmental Attribute
E[1] = non-Pb

Package Modifier
K = 48 balls
Q = 48 balls (66 possible positions)

Package Type
B3 = TFBGA (0.8mm pitch, 6mm x 8mm)
M2 = WFBGA (0.5mm pitch, 5mm x 6mm)
C2 = XFBGA (0.5mm pitch, 6mm x 8mm)

Temperature Range
C = Commercial = 0°C to +70°C
I = Industrial = -40°C to +85°C

Minimum Endurance
4 = 10,000 cycles

Read Access Speed
90 = 90 ns

Device Density
800 = 8 Mbit

Voltage
W = 1.65-1.95V

Product Series
39 = Multi-Purpose Flash

1. Environmental suffix “E” denotes non-Pb solder.
SST non-Pb solder devices are “RoHS Compliant”.

Valid combinations for SST39WF800A

SST39WF800A-90-4C-B3KE	SST39WF800A-90-4C-M2QE	SST39WF800A-90-4C-C2QE
SST39WF800A-90-4I-B3KE	SST39WF800A-90-4I-M2QE	SST39WF800A-90-4I-C2QE

Note: Valid combinations are those products in mass production or will be in mass production. Consult your SST sales representative to confirm availability of valid combinations and to determine availability of new combinations.

PACKAGING DIAGRAMS

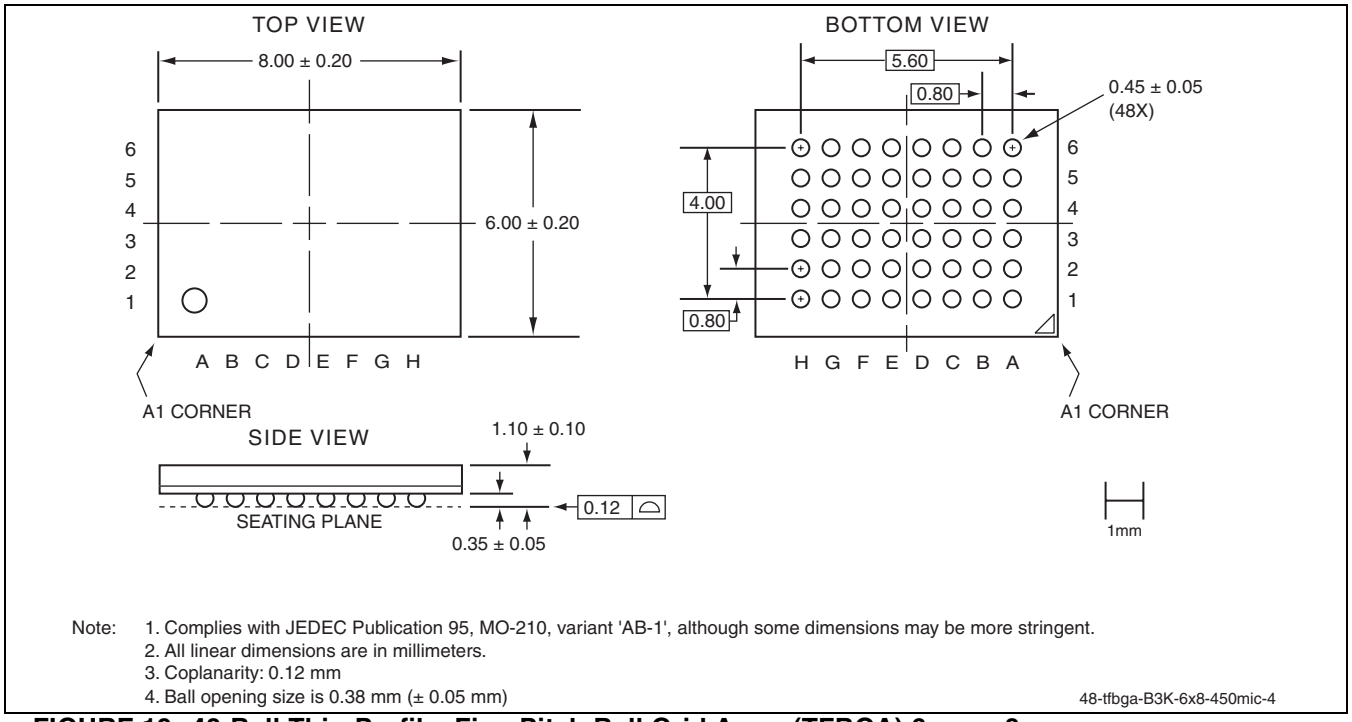

FIGURE 19: 48-Ball Thin-Profile, Fine-Pitch Ball Grid Array (TFBGA) 6mm x 8mm SST Package Code: B3K

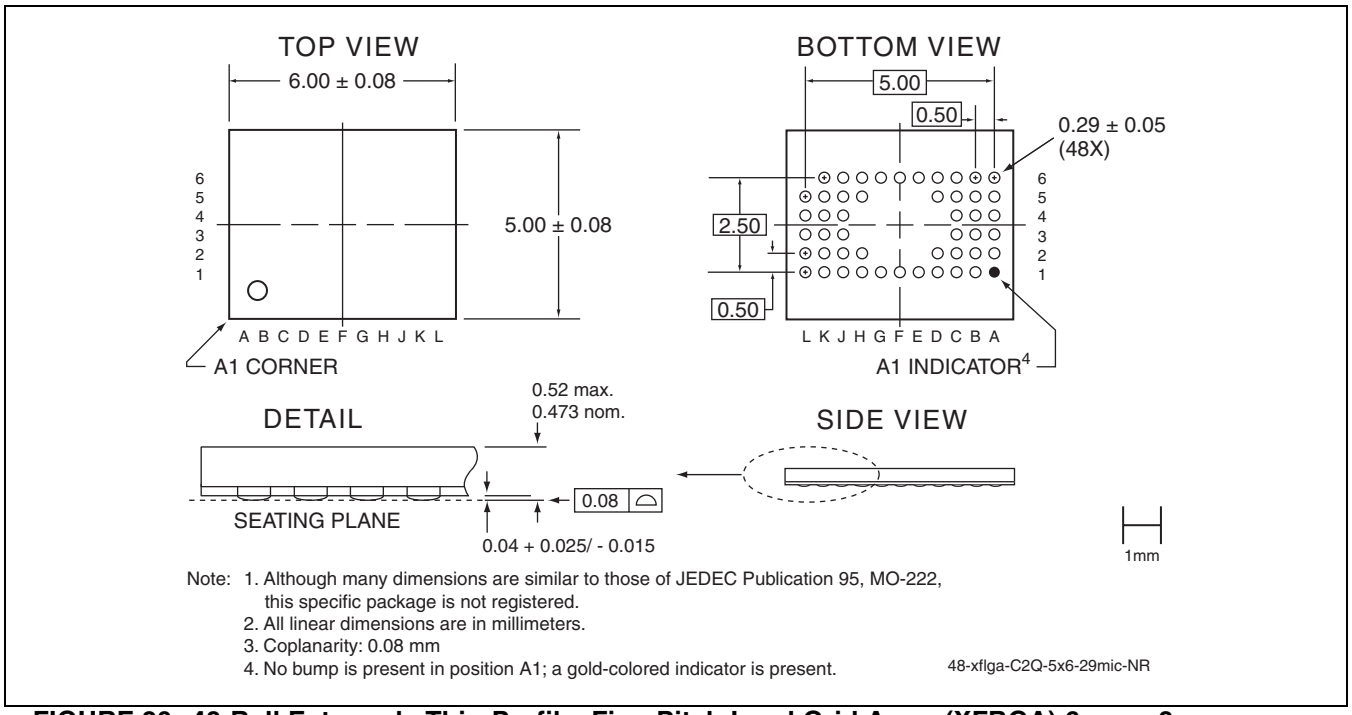

FIGURE 20: 48-Ball Extremely Thin-Profile, Fine-Pitch Land Grid Array (XFBGA) 6mm x 8mm SST Package Code: C2Q

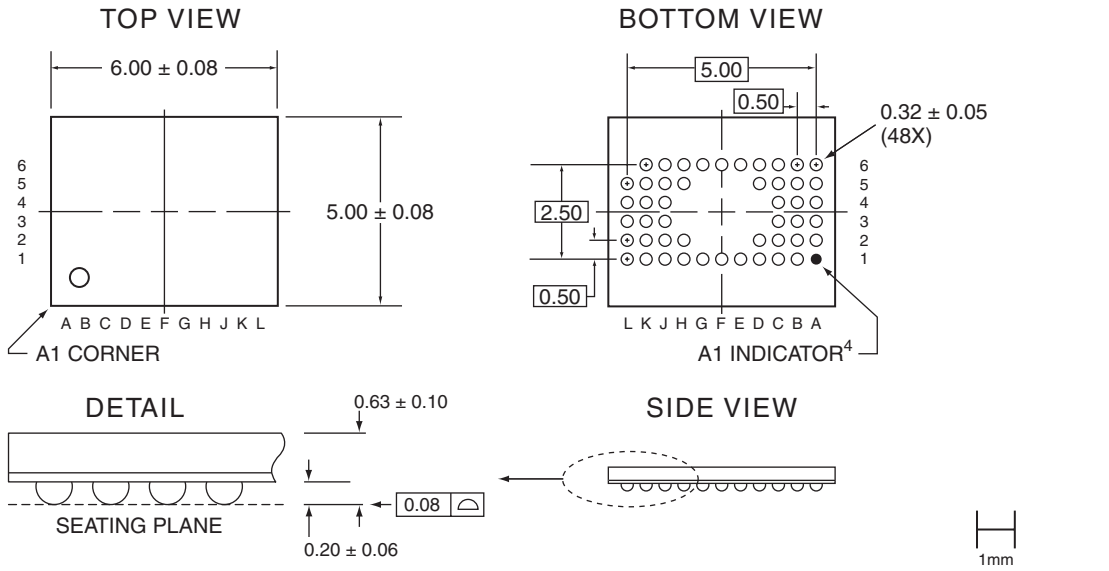

Note: 1. Although many dimensions are similar to those of JEDEC Publication 95, MO-225, this specific package is not registered.
2. All linear dimensions are in millimeters.
3. Coplanarity: 0.08 mm
4. No ball is present in position A1; a gold-colored indicator is present.
5. Ball opening size is 0.29 mm (± 0.05 mm)

48-wfbga-M2Q-5x6-32mic-0

FIGURE 21: 48-Ball Very-Very-Thin-Profile, Fine-Pitch Ball Grid Array (WFBGA) 5mm x 6mm SST Package Code: M2Q

TABLE 14: Revision History

Number	Description	Date
00	• Initial release	Aug 2004
01	• Corrected Standby Current from 1 µA to 5 µA on page 1 • Added M2Q package and associated MPNs • Clarified Surface Mount Temperatures in “Absolute Maximum Stress Ratings” on page 9	Nov 2004
02	• Changed data sheet status from “Preliminary Specifications” to “Data Sheet” • Added RoHS compliance information on page 1 and in the “Product Ordering Information” on page 23 • Corrected the solder temperature profile in “Absolute Maximum Stress Ratings” on page 9	Mar 2005
03	• Added C2Q package information and relevant marketing part numbers. • Removed Pb-based package marketing part numbers from valid ordering list on page 23. • Applied new style format.	Feb 2006