查询LM3488供应商 捷多邦，专业PCB打样工厂，24小时加急出货

National Semiconductor

May 2005

LM3488
High Efficiency Low-Side N-Channel Controller for Switching Regulators

General Description

The LM3488 is a versatile Low-Side N-FET high performance controller for switching regulators. It is suitable for use in topologies requiring low side FET, such as boost, flyback, SEPIC, etc. Moreover, the LM3488 can be operated at extremely high switching frequency in order to reduce the overall solution size. The switching frequency of LM3488 can be adjusted to any value between 100kHz and 1MHz by using a single external resistor or by synchronizing it to an external clock. Current mode control provides superior bandwidth and transient response, besides cycle-by-cycle current limiting. Output current can be programmed with a single external resistor.

The LM3488 has built in features such as thermal shutdown, short-circuit protection and over voltage protection. Power saving shutdown mode reduces the total supply current to 5µA and allows power supply sequencing. Internal soft-start limits the inrush current at start-up.

Key Specifications

- **Wide supply voltage range of 2.97V to 40V**
- 100kHz to 1MHz Adjustable and Synchronizable clock frequency
- ±1.5% (over temperature) internal reference
- 5µA shutdown current (over temperature)

Features

- 8-lead Mini-SO8 (MSOP-8) package
- Internal push-pull driver with 1A peak current capability
- Current limit and thermal shutdown
- Frequency compensation optimized with a capacitor and a resistor
- Internal softstart
- Current Mode Operation
- Undervoltage Lockout with hysteresis

Applications

- Distributed Power Systems
- Notebook, PDA, Digital Camera, and other Portable Applications
- Offline Power Supplies
- Set-Top Boxes

Typical Application Circuit

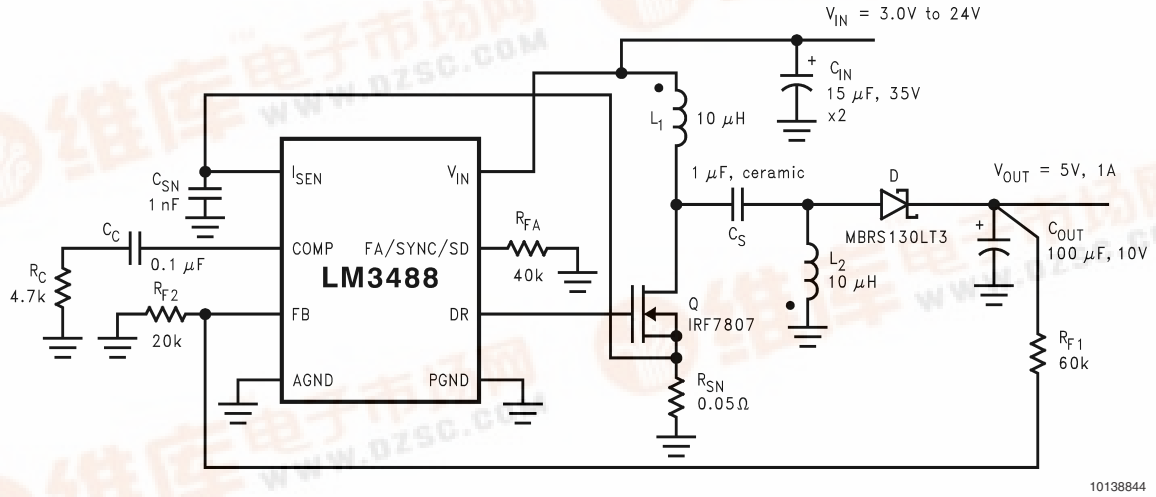

Typical SEPIC Converter

© 2005 National Semiconductor Corporation

Connection Diagram

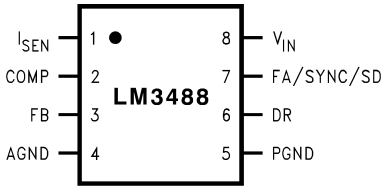

10138802

8 Lead Mini SO8 Package (MSOP-8 Package)

Package Marking and Ordering Information

Order Number	Package Type	Package Marking	Supplied As:
LM3488MM	MSOP-8	S21B	1000 units on Tape and Reel
LM3488MMX	MSOP-8	S21B	3500 units on Tape and Reel

Pin Description

Pin Name	Pin Number	Description
I_{SEN}	1	Current sense input pin. Voltage generated across an external sense resistor is fed into this pin.
COMP	2	Compensation pin. A resistor, capacitor combination connected to this pin provides compensation for the control loop.
FB	3	Feedback pin. The output voltage should be adjusted using a resistor divider to provide 1.26V at this pin.
AGND	4	Analog ground pin.
PGND	5	Power ground pin.
DR	6	Drive pin of the IC. The gate of the external MOSFET should be connected to this pin.
FA/SYNC/SD	7	Frequency adjust, synchronization, and Shutdown pin. A resistor connected to this pin sets the oscillator frequency. An external clock signal at this pin will synchronize the controller to the frequency of the clock. A high level on this pin for ≥ 30µs will turn the device off. The device will then draw less than 10µA from the supply.
V_{IN}	8	Power supply input pin.

Absolute Maximum Ratings (Note 1)

If Military/Aerospace specified devices are required, please contact the National Semiconductor Sales Office/ Distributors for availability and specifications.

Input Voltage	45V
FB Pin Voltage	-0.4V < V_{FB} < 7V
FA/SYNC/SD Pin Voltage	-0.4V < $V_{FA/SYNC/SD}$ < 7V
Peak Driver Output Current (<10µs)	1.0A
Power Dissipation	Internally Limited
Storage Temperature Range	−65˚C to +150˚C
Junction Temperature	+150˚C
ESD Susceptibilty	
Human Body Model (Note 2)	2kV
Lead Temperature	
MM Package	
Vapor Phase (60 sec.)	215˚C
Infared (15 sec.)	220˚C
DR Pin Voltage	−0.4V ≤ VDR ≤ 8V
I_{LIM} Pin Voltage	600mV

Operating Ratings (Note 1)

Supply Voltage	2.97V ≤ V_{IN} ≤ 40V
Junction Temperature Range	−40˚C ≤ T_J ≤ +125˚C
Switching Frequency	100kHz ≤ F_{SW} ≤ 1MHz

Electrical Characteristics

Specifications in Standard type face are for T_J = 25˚C, and in **bold type face** apply over the full **Operating Temperature Range**. Unless otherwise specified, V_{IN} = 12V, R_{FA} = 40kΩ

Symbol	Parameter	Conditions	Typical	Limit	Units
V_{FB}	Feedback Voltage	V_{COMP} = 1.4V, 2.97 ≤ V_{IN} ≤ 40V	1.26	 1.2507/**1.24** 1.2753/**1.28**	V V(min) V(max)
ΔV_{LINE}	Feedback Voltage Line Regulation	2.97 ≤ V_{IN} ≤ 40V	0.001		%/V
ΔV_{LOAD}	Output Voltage Load Regulation	I_{EAO} Source/Sink	±0.5		%/V (max)
V_{UVLO}	Input Undervoltage Lock-out		2.85	 **2.97**	V V(max)
$V_{UV(HYS)}$	Input Undervoltage Lock-out Hysteresis		170	 **130** **210**	mV mV (min) mV (max)
F_{nom}	Nominal Switching Frequency	R_{FA} = 40KΩ	400	 **370** **420**	kHz kHz(min) kHz(max)
$R_{DS1\ (ON)}$	Driver Switch On Resistance (top)	I_{DR} = 0.2A, V_{IN}= 5V	16		Ω
$R_{DS2\ (ON)}$	Driver Switch On Resistance (bottom)	I_{DR} = 0.2A	4.5		Ω
$V_{DR\ (max)}$	Maximum Drive Voltage Swing(Note 6)	V_{IN} < 7.2V	V_{IN}		V
		V_{IN} ≥ 7.2V	7.2		
D_{max}	Maximum Duty Cycle(Note 7)		100		%
T_{min} (on)	Minimum On Time		325	 **230** **550**	nsec nsec(min) nsec(max)
I_{SUPPLY}	Supply Current (switching)	(Note 9)	2.0	 **2.6**	mA mA (max)
I_Q	Quiescent Current in Shutdown Mode	$V_{FA/SYNC/SD}$ = 5V(Note 10), V_{IN} = 5V	5	 **7**	µA µA (max)
V_{SENSE}	Current Sense Threshold Voltage	V_{IN} = 5V	165	 140/ **135** 195/ **200**	mV mV (min) mV (max)

Electrical Characteristics (Continued)

Specifications in Standard type face are for T_J = 25˚C, and in **bold type face** apply over the full **Operating Temperature Range**. Unless otherwise specified, V_{IN} = 12V, R_{FA} = 40kΩ

Symbol	Parameter	Conditions	Typical	Limit	Units
V_{SC}	Short-Circuit Current Limit Sense Voltage	V_{IN} = 5V	325	 **235** **395**	mV mV (min) mV (max)
V_{SL}	Internal Compensation Ramp Voltage	V_{IN} = 5V	92	 **52** **132**	mV mV(min) mV(max)
V_{OVP}	Output Over-voltage Protection (with respect to feedback voltage) (Note 8)	V_{COMP} = 1.4V	50	 32/ **25** 78/ **85**	 mV mV(min) mV(max)
$V_{OVP(HYS)}$	Output Over-Voltage Protection Hysteresis(Note 8)	V_{COMP} = 1.4V	60	 **20** **110**	mV mV(min) mV(max)
Gm	Error Ampifier Transconductance	V_{COMP} = 1.4V I_{EAO} = 100μA (Source/Sink)	800	 600/ **365** 1000/ **1265**	μmho μmho (min) μmho (max)
A_{VOL}	Error Amplifier Voltage Gain	V_{COMP} = 1.4V I_{EAO} = 100μA (Source/Sink)	38	 **26** **44**	V/V V/V (min) V/V (max)
I_{EAO}	Error Amplifier Output Current (Source/ Sink)	Source, V_{COMP} = 1.4V, V_{FB} = 0V	110	 80/ **50** 140/ **180**	μA μA (min) μA (max)
		Sink, V_{COMP} = 1.4V, V_{FB} = 1.4V	–140	 –100/ **–85** –180/ **–185**	μA μA (min) μA (max)
V_{EAO}	Error Amplifier Output Voltage Swing	Upper Limit V_{FB} = 0V COMP Pin = Floating	2.2	 **1.8** **2.4**	V V(min) V(max)
		Lower Limit V_{FB} = 1.4V	0.56	 **0.2** **1.0**	V V(min) V(max)
T_{SS}	Internal Soft-Start Delay	V_{FB} = 1.2V, V_{COMP} = Floating	4		msec
T_r	Drive Pin Rise Time	Cgs = 3000pf, V_{DR} = 0 to 3V	25		ns
T_f	Drive Pin Fall Time	Cgs = 3000pf, V_{DR} = 0 to 3V	25		ns
VSD	Shutdown and Synchronization signal threshold (Note 5)	Output = High	1.27	 **1.35**	V V (max)
		Output = Low	0.65	 **0.35**	V V (min)
I_{SD}	Shutdown Pin Current	V_{SD} = 5V	–1		μA
		V_{SD} = 0V	+1		
TSD	Thermal Shutdown		165		˚C
T_{sh}	Thermal Shutdown Hysteresis		10		˚C
θ_{JA}	Thermal Resistance	MM Package	200		˚C/W

Electrical Characteristics (Continued)

Note 1: Absolute Maximum Ratings are limits beyond which damage to the device may occur. Operating Ratings are conditions under which operation of the device is intended to be functional. For guaranteed specifications and test conditions, see the Electrical Characteristics.

Note 2: The human body model is a 100 pF capacitor discharged through a 1.5kΩ resistor into each pin.

Note 3: All limits are guaranteed at room temperature (standard type face) and at **temperature extremes (bold type face)**. All room temperature limits are 100% tested. All limits at **temperature extremes** are guaranteed via correlation using standard Statistical Quality Control (SQC) methods. All limits are used to calculate Average Outgoing Quality Level (AOQL).

Note 4: Typical numbers are at 25˚C and represent the most likely norm.

Note 5: The FA/SYNC/SD pin should be pulled to V_{IN} through a resistor to turn the regulator off.

Note 6: The voltage on the drive pin, V_{DR} is equal to the input voltage when input voltage is less than 7.2V. V_{DR} is equal to 7.2V when the input voltage is greater than or equal to 7.2V.

Note 7: The limits for the maximum duty cycle can not be specified since the part does not permit less than 100% maximum duty cycle operation.

Note 8: The over-voltage protection is specified with respect to the feedback voltage. This is because the over-voltage protection tracks the feedback voltage. The over-voltage thresold can be calculated by adding the feedback voltage, V_{FB} to the over-voltage protection specification.

Note 9: For this test, the FA/SYNC/SD Pin is pulled to ground using a 40K resistor .

Note 10: For this test, the FA/SYNC/SD Pin is pulled to 5V using a 40K resistor.

Typical Performance Characteristics

Unless otherwise specified, V_{IN} = 12V, T_J = 25˚C.

I_Q vs Temperature & Input Voltage

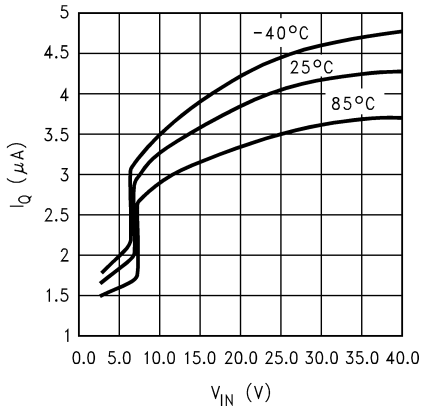

10138803

I_{Supply} vs Input Voltage (Non-Switching)

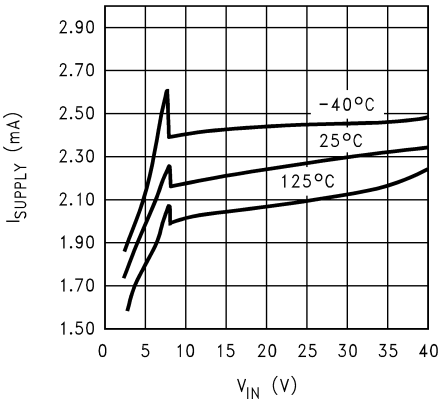

10138834

I_{Supply} vs V_{IN}

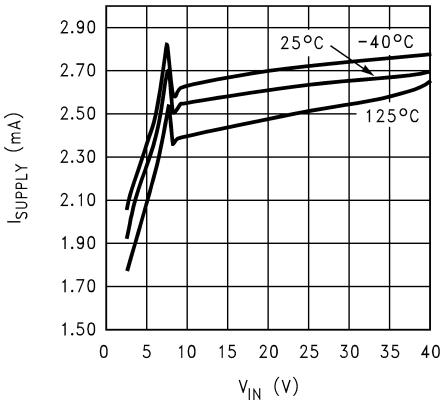

10138835

Switching Frequency vs RFA

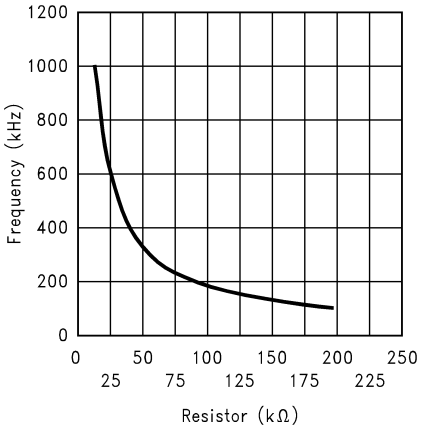

10138804

Frequency vs Temperature

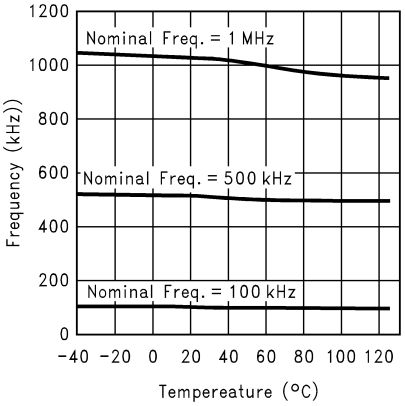

10138854

Drive Voltage vs Input Voltage

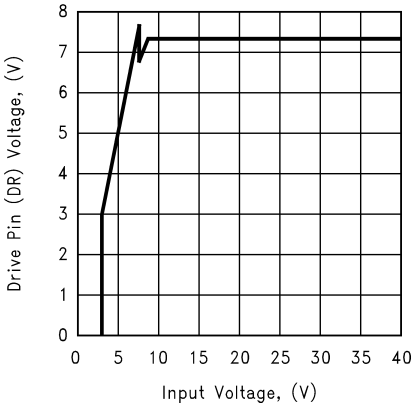

10138805

Typical Performance Characteristics Unless otherwise specified, V_{IN} = 12V, T_J = 25˚C. (Continued)

Current Sense Threshold vs Input Voltage

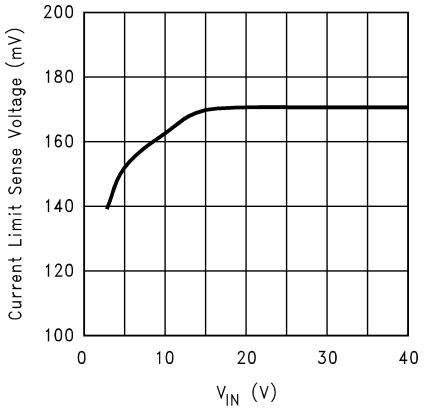

10138845

COMP Pin Voltage vs Load Current

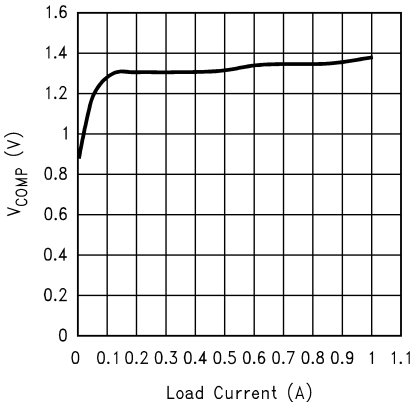

10138862

Efficiency vs Load Current (3.3V In and 12V Out)

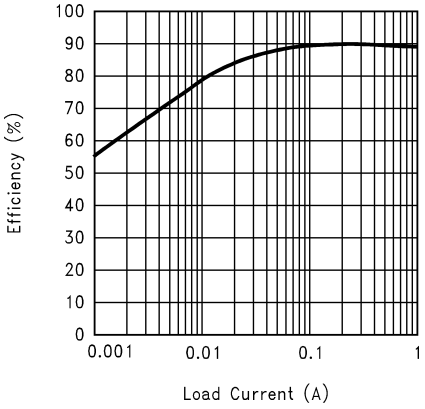

10138859

Efficiency vs Load Current (5V In and 12V Out)

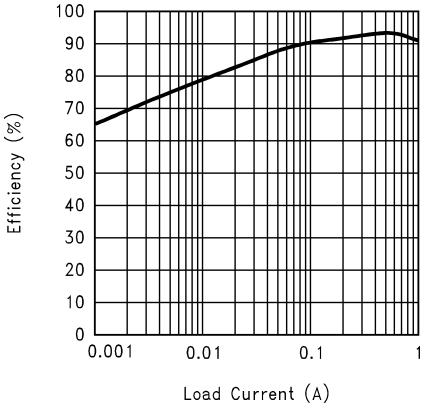

10138858

Efficiency vs Load Current (9V In and 12V Out)

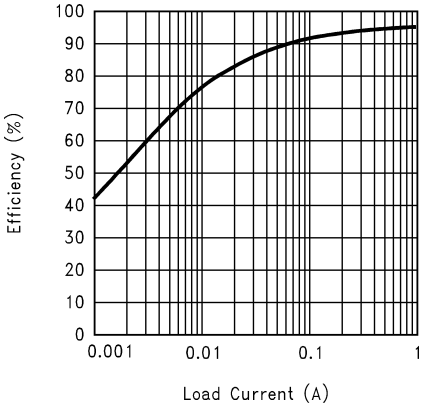

10138860

Efficiency vs Load Current (3.3V In and 5V Out)

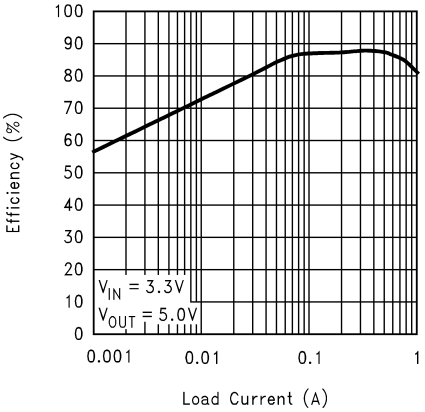

10138853

Typical Performance Characteristics Unless otherwise specified, V_{IN} = 12V, T_J = 25˚C. (Continued)

Error Amplifier Gain

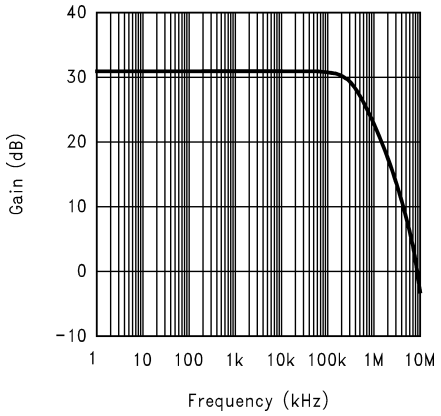

10138855

Error Amplifier Phase

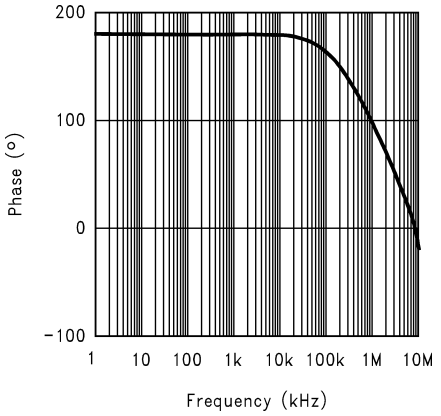

10138856

COMP Pin Source Current vs Temperature

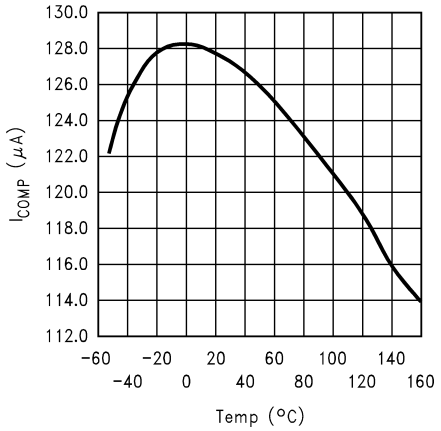

10138836

Short Circuit Protection vs Input Voltage

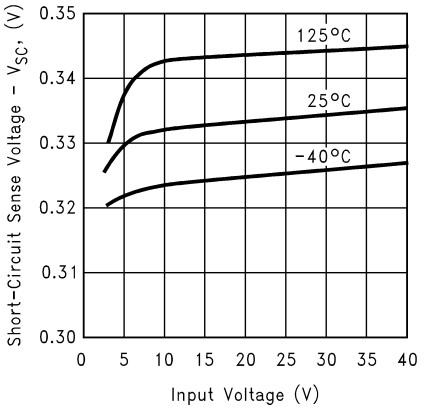

10138857

Compensation Ramp vs Compensation Resistor

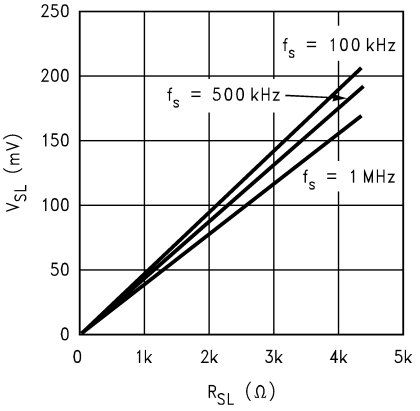

10138851

Shutdown Threshold Hysteresis vs Temperature

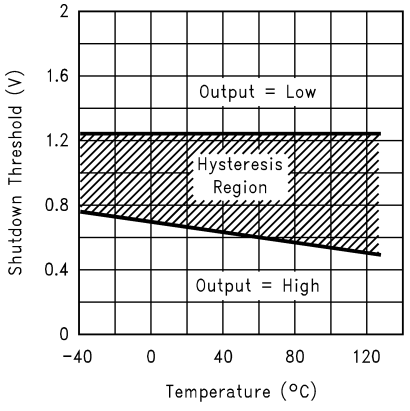

10138846

Typical Performance Characteristics Unless otherwise specified, V_{IN} = 12V, T_J = 25˚C. (Continued)

Current Sense Voltage vs Duty Cycle

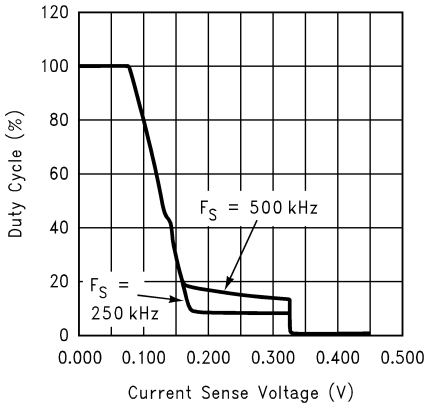

10138852

Functional Block Diagram

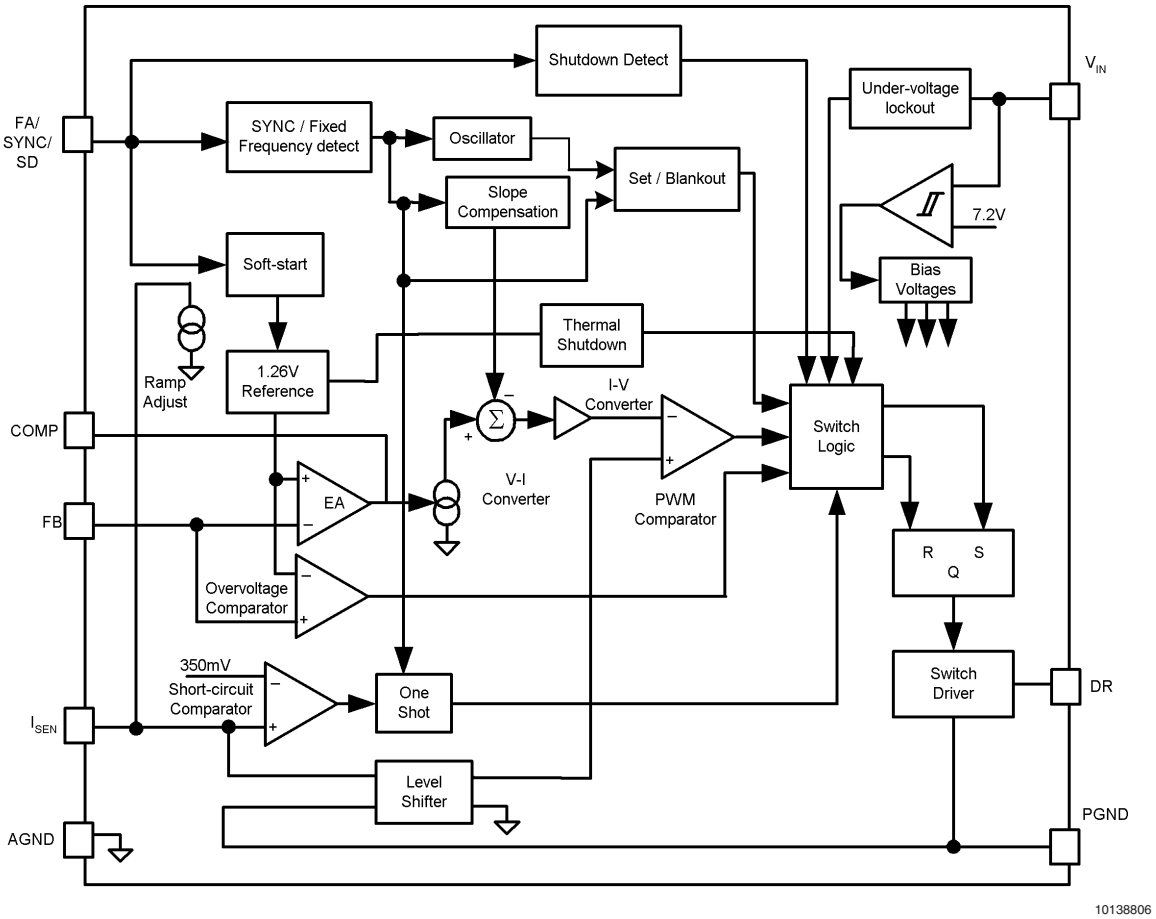

Functional Description

The LM3488 uses a fixed frequency, Pulse Width Modulated (PWM), current mode control architecture. In a typical application circuit, the peak current through the external MOSFET is sensed through an external sense resistor. The voltage across this resistor is fed into the I_{SEN} pin. This voltage is then level shifted and fed into the positive input of the PWM comparator. The output voltage is also sensed through an external feedback resistor divider network and fed into the error amplifier negative input (feedback pin, FB). The output of the error amplifier (COMP pin) is added to the slope compensation ramp and fed into the negative input of the PWM comparator.

At the start of any switching cycle, the oscillator sets the RS latch using the SET/Blank-out and switch logic blocks. This forces a high signal on the DR pin (gate of the external MOSFET) and the external MOSFET turns on. When the voltage on the positive input of the PWM comparator exceeds the negative input, the RS latch is reset and the external MOSFET turns off.

The voltage sensed across the sense resistor generally contains spurious noise spikes, as shown in *Figure 1*. These spikes can force the PWM comparator to reset the RS latch prematurely. To prevent these spikes from resetting the latch, a blank-out circuit inside the IC prevents the PWM comparator from resetting the latch for a short duration after the latch is set. This duration is about 150ns and is called the blank-out time.

Under extremely light load or no-load conditions, the energy delivered to the output capacitor when the external MOSFET is on during the blank-out time is more than what is delivered to the load. An over-voltage comparator inside the LM3488 prevents the output voltage from rising under these conditions. The over-voltage comparator senses the feedback (FB pin) voltage and resets the RS latch under these conditions. The latch remains in reset state till the output decays to the nominal value.

Functional Description (Continued)

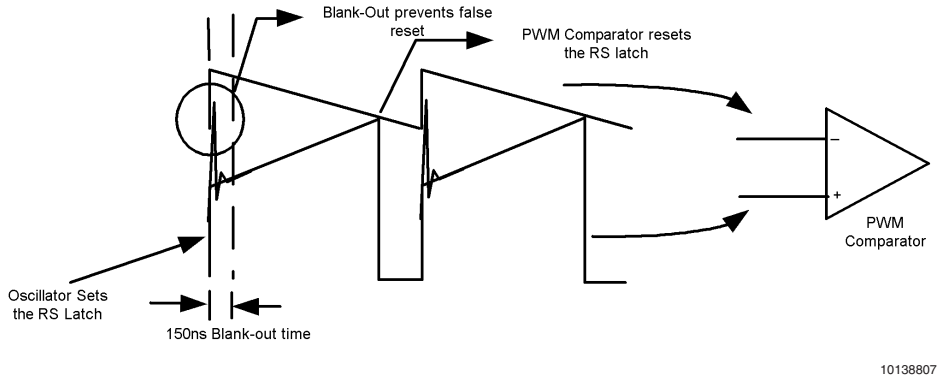

FIGURE 1. Basic Operation of the PWM comparator

SLOPE COMPENSATION RAMP

The LM3488 uses a current mode control scheme. The main advantages of current mode control are inherent cycle-by-cycle current limit for the switch, and simpler control loop characteristics. It is also easy to parallel power stages using current mode control since as current sharing is automatic.

Current mode control has an inherent instability for duty cycles greater than 50%, as shown in *Figure 2*. In *Figure 2*, a small increase in the load current causes the switch current to increase by ΔI_O. The effect of this load change, ΔI_1, is :

$$\Delta I_1 = -\left(\frac{M_2}{M_1}\right)\Delta I_O = -\left(\frac{D}{1-D}\right)\Delta I_O$$

From the above equation, when D > 0.5, ΔI_1 will be greater than ΔI_O. In other words, the disturbance is divergent. So a very small perturbation in the load will cause the disturbance to increase.

To prevent the sub-harmonic oscillations, a compensation ramp is added to the control signal, as shown in *Figure 3*.

With the compensation ramp,

$$\Delta I_1 = -\left(\frac{M_2 - M_C}{M_1 + M_C}\right)\Delta I_O$$

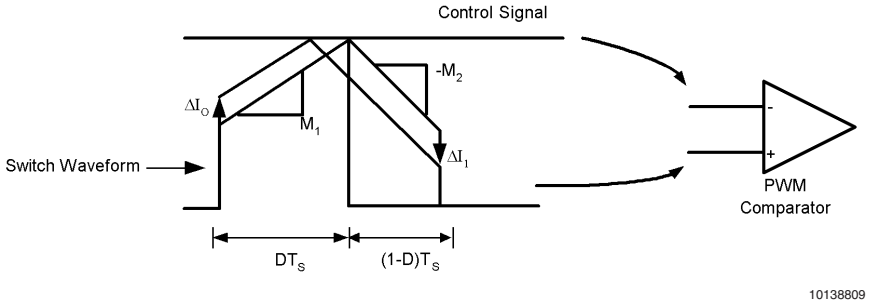

FIGURE 2. Sub-Harmonic Oscillation for D>0.5

Functional Description (Continued)

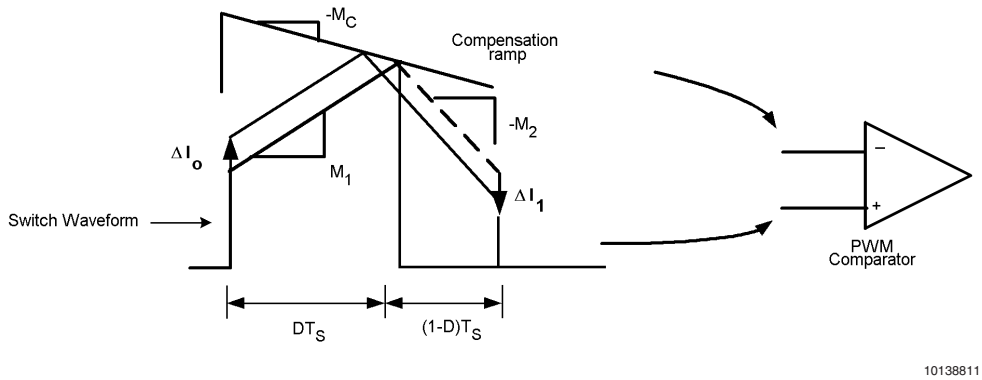

FIGURE 3. Compensation Ramp Avoids Sub-Harmonic Oscillation

The compensation ramp has been added internally in LM3488. The slope of this compensation ramp has been selected to satisfy most of the applications. The slope of the internal compensation ramp depends on the frequency. This slope can be calculated using the formula:

$$M_C = V_{SL}.F_S \text{ Volts/second}$$

In the above equation, V_{SL} is the amplitude of the internal compensation ramp. Limits for V_{SL} have been specified in the electrical characteristics.

In order to provide the user additional flexibility, a patented scheme has been implemented inside the IC to increase the slope of the compensation ramp externally, if the need arises. Adding a single external resistor, R_{SL}(as shown in *Figure 4*) increases the slope of the compensation ramp, M_C by :

$$\Delta M_C = \frac{40x10^{-6} \cdot R_{SL} \cdot F_S}{R_{SEN}} \frac{\text{Amps}}{\text{second}}$$

In this equation, ΔV_{SL} is equal to $40.10^{-6}R_{SL}$. Hence,

$$\Delta M_C = \frac{\Delta V_{SL}.F_S}{R_{SEN}} \frac{\text{Amps}}{\text{second}}$$

ΔV_{SL} versus R_{SL} has been plotted in *Figure 5* for different frequencies.

Functional Description (Continued)

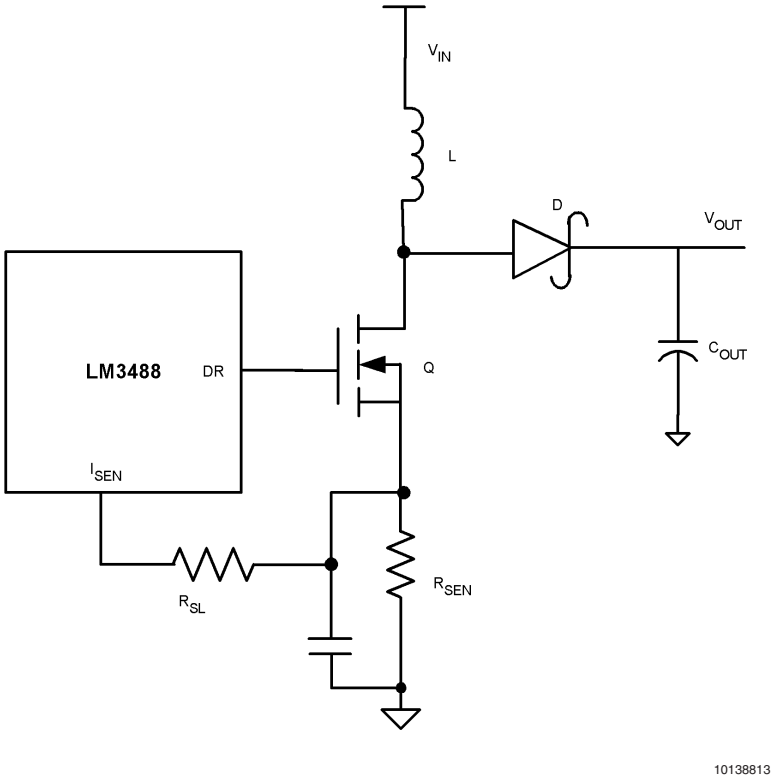

FIGURE 4. Increasing the Slope of the Compensation Ramp

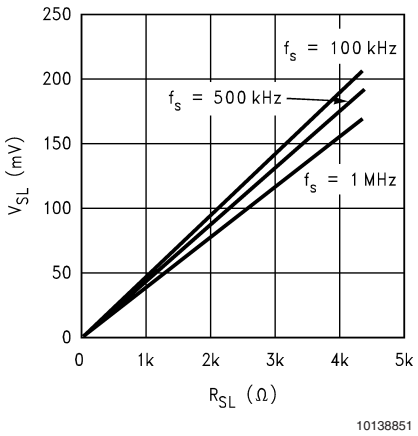

FIGURE 5. ΔV_{SL} vs R_{SL}

FREQUENCY ADJUST/SYNCHRONIZATION/SHUTDOWN

The switching frequency of LM3488 can be adjusted between 100kHz and 1MHz using a single external resistor. This resistor must be connected between FA/SYNC/SD pin and ground, as shown in *Figure 6*. Please refer to the typical performance characteristics to determine the value of the resistor required for a desired switching frequency.

The LM3488 can be synchronized to an external clock. The external clock must be connected to the FA/SYNC/SD pin through a resistor, R_{SYNC} as shown in *Figure 7*. The value of this resistor is dependent on the off time of the synchronization pulse, $T_{OFF(SYNC)}$. *Table 1* shows the range of resistors to be used for a given $T_{OFF(SYNC)}$.

TABLE 1.

$T_{OFF(SYNC)}$ (µsec)	R_{SYNC} range (kΩ)
1	5 to 13
2	20 to 40
3	40 to 65

Functional Description (Continued)

TABLE 1. (Continued)

$T_{OFF(SYNC)}$ (µsec)	R_{SYNC} range (kΩ)
4	55 to 90
5	70 to 110
6	85 to 140
7	100 to 160
8	120 to 190
9	135 to 215
10	150 to 240

It is also necessary to have the width of the synchronization pulse narrower than the duty cycle of the converter. It is also necessary to have the synchronization pulse width ≥ 300nsecs.

The FA/SYNC/SD pin also functions as a shutdown pin. If a high signal (refer to the electrical characteristics for definition of high signal) appears on the FA/SYNC/SD pin, the LM3488 stops switching and goes into a low current mode. The total supply current of the IC reduces to less than 10µA under these conditions.

Figure 8 and *Figure 9* show implementation of shutdown function when operating in Frequency adjust mode and synchronization mode respectively. In frequency adjust mode, connecting the FA/SYNC/SD pin to ground forces the clock to run at a certain frequency. Pulling this pin high shuts down the IC. In frequency adjust or synchronization mode, a high signal for more than 30ms shuts down the IC.

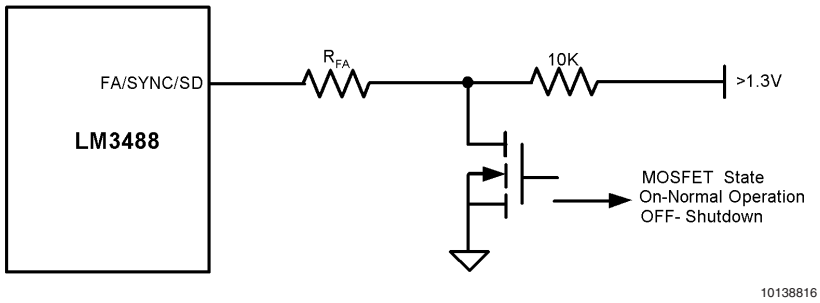

FIGURE 6. Frequency Adjust

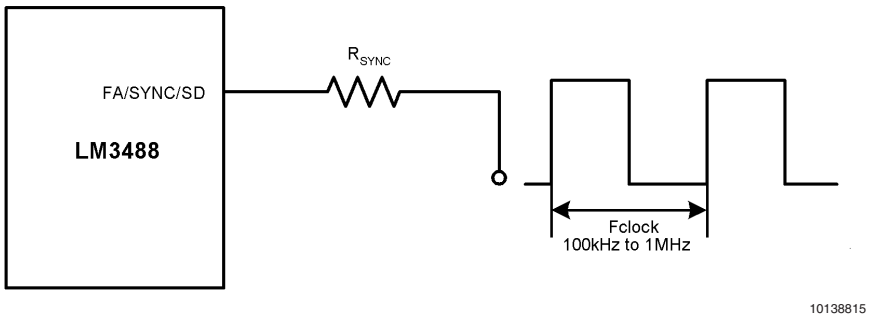

FIGURE 7. Frequency Synchronization

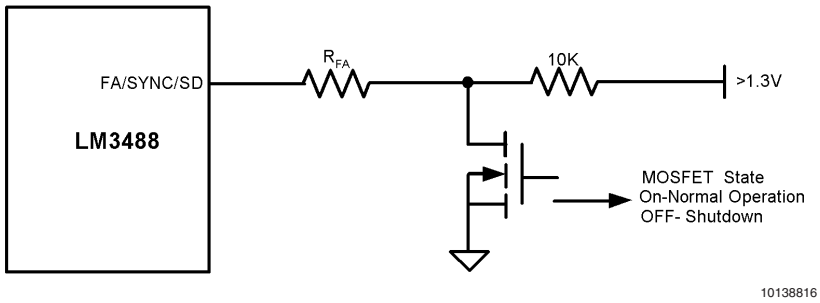

FIGURE 8. Shutdown Operation in Frequency Adjust Mode

Functional Description (Continued)

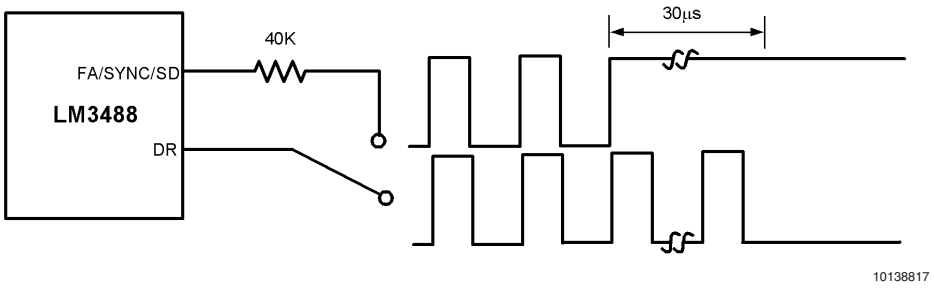

FIGURE 9. Shutdown Operation in Synchronization Mode

SHORT-CIRCUIT PROTECTION

When the voltage across the sense resistor (measured on I_{SEN} Pin) exceeds 350mV, short-circuit current limit gets activated. A comparator inside LM3488 reduces the switching frequency by a factor of 5 and maintains this condition till the short is removed.

Typical Applications

The LM3488 may be operated in either continuous or discontinuous conduction mode. The following applications are designed for continuous conduction operation. This mode of operation has higher efficiency and lower EMI characteristics than the discontinuous mode.

BOOST CONVERTER

The most common topology for LM3488 is the boost or step-up topology. The boost converter converts a low input voltage into a higher output voltage. The basic configuration for a boost regulator is shown in *Figure 10*. In continuous conduction mode (when the inductor current never reaches zero at steady state), the boost regulator operates in two cycles. In the first cycle of operation, MOSFET Q is turned on and energy is stored in the inductor. During this cycle, diode D is reverse biased and load current is supplied by the output capacitor, C_{OUT}.

In the second cycle, MOSFET Q is off and the diode is forward biased. The energy stored in the inductor is transferred to the load and output capacitor. The ratio of these two cycles determines the output voltage. The output voltage is defined as:

$$V_{OUT} = \frac{V_{IN}}{1-D}$$

(ignoring the drop across the MOSFET and the diode), or

$$V_{OUT} + V_D = \frac{V_{IN} - V_Q}{1-D}$$

where D is the duty cycle of the switch, V_D is the forward voltage drop of the diode, and V_Q is the drop across the MOSFET when it is on. The following sections describe selection of components for a boost converter.

Typical Applications (Continued)

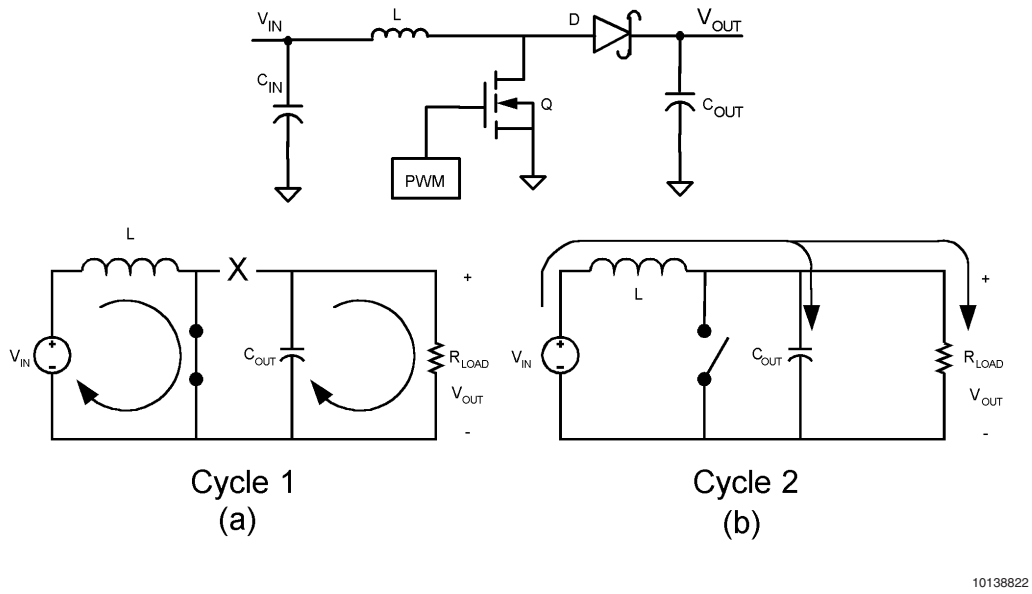

FIGURE 10. Simplified Boost Converter Diagram (a) First cycle of operation. (b) Second cycle of operation

POWER INDUCTOR SELECTION

The inductor is one of the two energy storage elements in a boost converter. *Figure 11* shows how the inductor current varies during a switching cycle. The current through an inductor is quantified as:

$$V_L(t) = L \frac{di_L(t)}{dt}$$

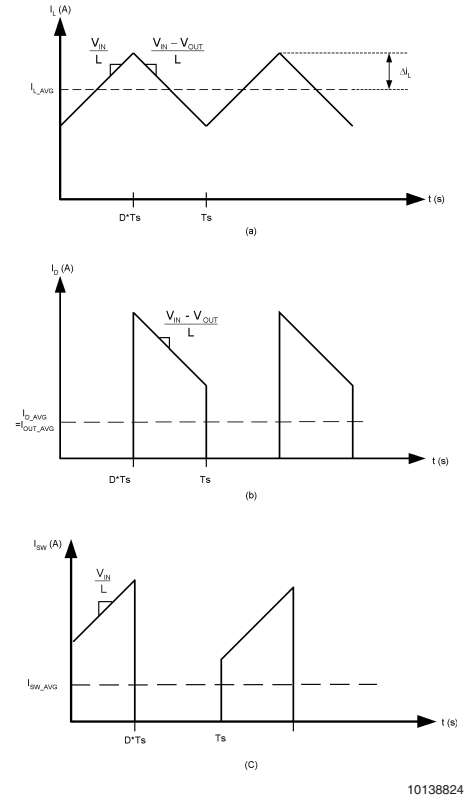

FIGURE 11. A. Inductor current B. Diode current

If $V_L(t)$ is constant, $di_L(t)/dt$ must be constant. Hence, for a given input voltage and output voltage, the current in the inductor changes at a constant rate.

Typical Applications (Continued)

The important quantities in determining a proper inductance value are $\bar{I}_L$ (the average inductor current) and Δi_L (the inductor current ripple). If Δi_L is larger than $\bar{I}_L$, the inductor current will drop to zero for a portion of the cycle and the converter will operate in discontinuous conduction mode. If Δi_L is smaller than $\bar{I}_L$, the inductor current will stay above zero and the converter will operate in continuous conduction mode. All the analysis in this datasheet assumes operation in continuous conduction mode. To operate in continuous conduction mode, the following conditions must be met:

$$\bar{I}_L > \Delta i_L$$

$$\frac{I_{OUT}}{1-D} > \frac{DV_{IN}}{2f_S L}$$

$$L > \frac{D(1-D)V_{IN}}{2I_{OUT}f_S}$$

Choose the minimum I_{OUT} to determine the minimum L. A common choice is to set Δi_L to 30% of $\bar{I}_L$. Choosing an appropriate core size for the inductor involves calculating the average and peak currents expected through the inductor. In a boost converter,

$$\bar{I}_L = \frac{I_{OUT}}{1-D}$$

and $I_{L_peak} = \bar{I}_L(max) + \Delta i_L(max)$,
where

$$\Delta i_L = \frac{DV_{IN}}{2f_S L}$$

A core size with ratings higher than these values should be chosen. If the core is not properly rated, saturation will dramatically reduce overall efficiency.

The LM3488 can be set to switch at very high frequencies. When the switching frequency is high, the converter can be operated with very small inductor values. With a small inductor value, the peak inductor current can be extremely higher than the output currents, especially under light load conditions.

The LM3488 senses the peak current through the switch. The peak current through the switch is the same as the peak current calculated above.

PROGRAMMING THE OUTPUT VOLTAGE AND OUTPUT CURRENT

The output voltage can be programmed using a resistor divider between the output and the feedback pins, as shown in *Figure 12*. The resistors are selected such that the voltage at the feedback pin is 1.26V. R_{F1} and R_{F2} can be selected using the equation,

$$V_{OUT} = 1.26\left(1+\frac{R_{F1}}{R_{F2}}\right)$$

A 100pF capacitor may be connected between the feedback and ground pins to reduce noise.

The maximum amount of current that can be delivered at the output can be controlled by the sense resistor, R_{SEN}. Current limit occurs when the voltage that is generated across the sense resistor equals the current sense threshold voltage, V_{SENSE}. Limits for V_{SENSE} have been specified in the electrical characteristics. This can be expressed as:

$$I_{sw(peak)} * R_{SEN} = V_{SENSE}$$

V_{SENSE} represents the maximum value of the control signal as shown in *Figure 2*. This control signal, however, is not a constant value and changes over the course of a period as a result of the internal compensation ramp (see *Figure 3*). Therefore the current limit will also change as a result of the internal compensation ramp. The actual command signal, V_{CS}, can be better expressed as a function of the sense voltage and the internal compensation ramp:

$$V_{CS} = V_{SENSE} - (D * V_{SL})$$

V_{SL} is defined as the internal compensation ramp voltage, limits are specified in the electrical characteristics.

The peak current through the switch is equal to the peak inductor current.

$$I_{sw(peak)} = I_L + \Delta i_L$$

Therefore for a boost converter

$$I_{sw(peak)} = \frac{I_{OUT}}{(1-D)} + \frac{(D * V_{IN})}{(2 * f_S * L)}$$

Combining the three equation yields an expression for R_{SEN}

$$R_{SEN} = \frac{\left[V_{SENSE} - (D * V_{SL})\right]}{\left[\frac{I_{OUT}}{(1-D)} + \frac{(D * V_{IN})}{(2 * f_S * L)}\right]}$$

Typical Applications (Continued)

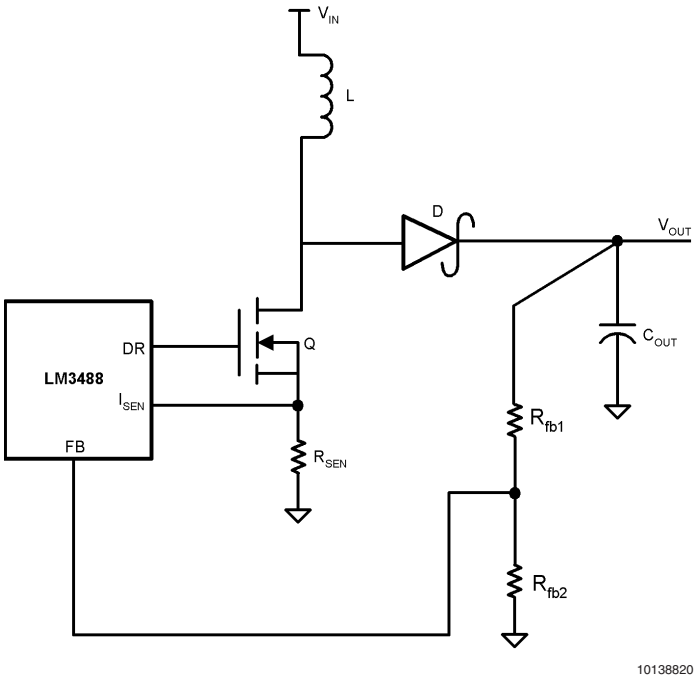

FIGURE 12. Adjusting the Output Voltage

CURRENT LIMIT WITH ADDITIONAL SLOPE COMPENSATION

If an external slope compensation resistor is used (see *Figure 4*) the internal control signal will be modified and this will have an effect on the current limit. The control signal is given by:

$$V_{CS} = V_{SENSE} - (D * V_{SL})$$

Where V_{SENSE} and V_{SL} are defined parameters in the electrical characteristics section. If R_{SL} is used, then this will add to the existing slope compensation. The command voltage will then be given by:

$$V_{CS} = V_{SENSE} - (D * (V_{SL} + \Delta V_{SL}))$$

Where ΔV_{SL} is the additional slope compensation generated and can be calculated by use of *Figure 5* or is equal to 40 x 10^{-6} * R_{SL}. This changes the equation for R_{SEN} to:

$$R_{SEN} = \frac{\left[V_{SENSE} - D \times (V_{SL} + \Delta V_{SL})\right]}{\left[\frac{I_{OUT}}{(1-D)} + \frac{(D \times V_{IN})}{(2 \times f_S \times L)}\right]}$$

Therefore R_{SL} can be used to provide an additional method for setting the current limit.

POWER DIODE SELECTION

Observation of the boost converter circuit shows that the average current through the diode is the average load current, and the peak current through the diode is the peak current through the inductor. The diode should be rated to handle more than its peak current. The peak diode current can be calculated using the formula:

$$I_{D(Peak)} = I_{OUT}/ (1-D) + \Delta I_L$$

In the above equation, I_{OUT} is the output current and ΔI_L has been defined in *Figure 11*

The peak reverse voltage for boost converter is equal to the regulator output voltage. The diode must be capable of handling this voltage. To improve efficiency, a low forward drop schottky diode is recommended.

POWER MOSFET SELECTION

The drive pin of LM3488 must be connected to the gate of an external MOSFET. In a boost topology, the drain of the external N-Channel MOSFET is connected to the inductor and the source is connected to the ground. The drive pin (DR) voltage depends on the input voltage (see typical performance characteristics). In most applications, a logic level MOSFET can be used. For very low input voltages, a sub-logic level MOSFET should be used.

The selected MOSFET directly controls the efficiency. The critical parameters for selection of a MOSFET are:

1. Minimum threshold voltage, V_{TH}(MIN)
2. On-resistance, R_{DS}(ON)
3. Total gate charge, Q_g
4. Reverse transfer capacitance, C_{RSS}
5. Maximum drain to source voltage, $V_{DS(MAX)}$

The off-state voltage of the MOSFET is approximately equal to the output voltage. $V_{DS(MAX)}$ of the MOSFET must be greater than the output voltage. The power losses in the MOSFET can be categorized into conduction losses and ac switching or transition losses. $R_{DS(ON)}$ is needed to estimate the conduction losses. The conduction loss, P_{COND}, is the I^2R loss across the MOSFET. The maximum conduction loss is given by:

Typical Applications (Continued)

$$P_{COND(MAX)} = \left[\left(\frac{I_{OUT}}{1-D_{MAX}}\right)^2 + \left(\frac{\Delta I}{3}\right)^2\right] D_{MAX} R_{DS(ON)}$$

where D_{MAX} is the maximum duty cycle.

$$D_{MAX} = \left(1 - \frac{V_{IN\,(MIN)}}{V_{OUT}}\right)$$

The turn-on and turn-off transitions of a MOSFET require times of tens of nano-seconds. C_{RSS} and Q_g are needed to estimate the large instantaneous power loss that occurs during these transitions.

The amount of gate current required to turn the MOSFET on can be calculated using the formula:

$$I_G = Q_g.F_S$$

The required gate drive power to turn the MOSFET on is equal to the switching frequency times the energy required to deliver the charge to bring the gate charge voltage to V_{DR} (see electrical characteristics and typical performance characteristics for the drive voltage specification).

$$P_{Drive} = F_S.Q_g.V_{DR}$$

INPUT CAPACITOR SELECTION

Due to the presence of an inductor at the input of a boost converter, the input current waveform is continuous and triangular, as shown in *Figure 11*. The inductor ensures that the input capacitor sees fairly low ripple currents. However, as the input capacitor gets smaller, the input ripple goes up. The rms current in the input capacitor is given by:

$$I_{CIN(RMS)} = \Delta i_L / \sqrt{3} = \frac{1}{2\sqrt{3}}\left(\frac{V_{OUT} - V_{IN}}{V_{OUT} L f_S}\right)$$

The input capacitor should be capable of handling the rms current. Although the input capacitor is not as critical in a boost application, low values can cause impedance interactions. Therefore a good quality capacitor should be chosen in the range of 100µF to 200µF. If a value lower than 100µF is used, then problems with impedance interactions or switching noise can affect the LM3478. To improve performance, especially with V_{IN} below 8 volts, it is recommended to use a 20Ω resistor at the input to provide a RC filter. The resistor is placed in series with the V_{IN} pin with only a bypass capacitor attached to the V_{IN} pin directly (see *Figure 13*). A 0.1µF or 1µF ceramic capacitor is necessary in this configuration. The bulk input capacitor and inductor will connect on the other side of the resistor with the input power supply.

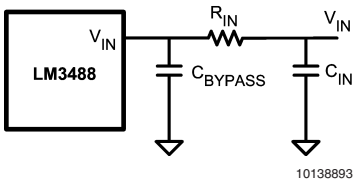

FIGURE 13. Reducing IC Input Noise

OUTPUT CAPACITOR SELECTION

The output capacitor in a boost converter provides all the output current when the inductor is charging. As a result it sees very large ripple currents. The output capacitor should be capable of handling the maximum rms current. The rms current in the output capacitor is:

$$I_{COUT(RMS)} = \sqrt{(1-D)\left[I_{OUT}^2 \frac{D}{(1-D)^2} + \frac{\Delta i_L^2}{3}\right]}$$

Where

$$\Delta i_L = \frac{DV_{IN}}{2Lf_S}$$

and D, the duty cycle is equal to $(V_{OUT} - V_{IN})/V_{OUT}$.

The ESR and ESL of the output capacitor directly control the output ripple. Use capacitors with low ESR and ESL at the output for high efficiency and low ripple voltage. Surface Mount tantalums, surface mount polymer electrolytic and polymer tantalum, Sanyo- OSCON, or multi-layer ceramic capacitors are recommended at the output.

Designing SEPIC Using LM3488

Since the LM3488 controls a low-side N-Channel MOSFET, it can also be used in SEPIC (Single Ended Primary Inductance Converter) applications. An example of SEPIC using LM3488 is shown in *Figure 14*. As shown in *Figure 14*, the output voltage can be higher or lower than the input voltage. The SEPIC uses two inductors to step-up or step-down the input voltage. The inductors L1 and L2 can be two discrete inductors or two windings of a coupled transformer since equal voltages are applied across the inductor throughout the switching cycle. Using two discrete inductors allows use of catalog magnetics, as opposed to a custom transformer. The input ripple can be reduced along with size by using the coupled windings of transformer for L1 and L2.

Due to the presence of the inductor L1 at the input, the SEPIC inherits all the benefits of a boost converter. One main advantage of SEPIC over boost converter is the inherent input to output isolation. The capacitor CS isolates the input from the output and provides protection against shorted or malfunctioning load. Hence, the A SEPIC is useful for replacing boost circuits when true shutdown is required. This means that the output voltage falls to 0V when the switch is turned off. In a boost converter, the output can only fall to the input voltage minus a diode drop.

Designing SEPIC Using LM3488

(Continued)

The duty cycle of a SEPIC is given by:

$$D = \frac{V_{OUT} + V_{DIODE}}{V_{OUT} + V_{IN} - V_Q + V_{DIODE}}$$

In the above equation, V_Q is the on-state voltage of the MOSFET, Q, and V_{DIODE} is the forward voltage drop of the diode.

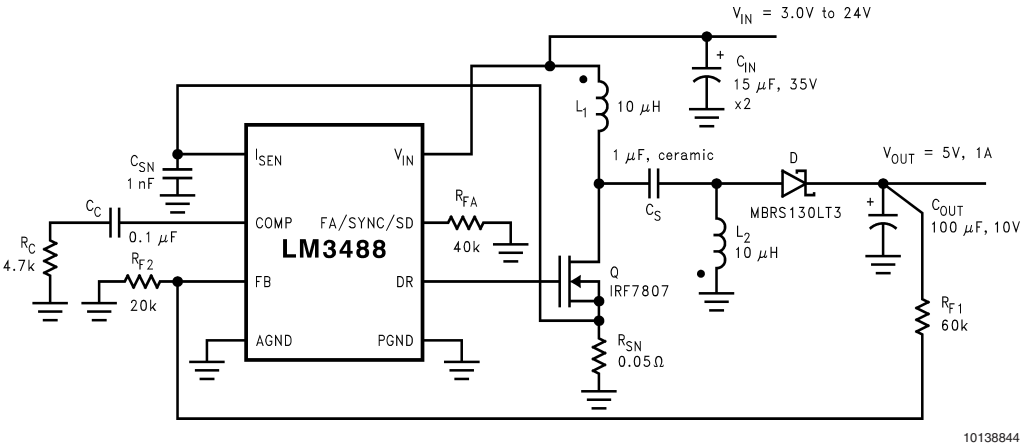

FIGURE 14. Typical SEPIC Converter

POWER MOSFET SELECTION

As in boost converter, the parameters governing the selection of the MOSFET are the minimum threshold voltage, $V_{TH(MIN)}$, the on-resistance, $R_{DS(ON)}$, the total gate charge, Q_g, the reverse transfer capacitance, C_{RSS}, and the maximum drain to source voltage, $V_{DS(MAX)}$. The peak switch voltage in a SEPIC is given by:

$$V_{SW(PEAK)} = V_{IN} + V_{OUT} + V_{DIODE}$$

The selected MOSFET should satisfy the condition:

$$V_{DS(MAX)} > V_{SW(PEAK)}$$

The peak switch current is given by:

$$I_{SW(PEAK)} = I_{L1(AVG)} + I_{OUT} + \frac{\Delta I_{L1} + \Delta I_{L2}}{2}$$

The rms current through the switch is given by:

$$I_{SWRMS} = \sqrt{\left[I_{SWPEAK}^2 - I_{SWPEAK}(\Delta I_{L1} + \Delta I_{L2}) + \frac{(\Delta I_{L1} + \Delta I_{L2})^2}{3}\right] D}$$

POWER DIODE SELECTION

The Power diode must be selected to handle the peak current and the peak reverse voltage. In a SEPIC, the diode peak current is the same as the switch peak current. The off-state voltage or peak reverse voltage of the diode is $V_{IN} + V_{OUT}$. Similar to the boost converter, the average diode current is equal to the output current. Schottky diodes are recommended.

SELECTION OF INDUCTORS L1 AND L2

Proper selection of the inductors L1 and L2 to maintain constant current mode requires calculations of the following parameters.

Average current in the inductors:

$$I_{L1AVE} = \frac{DI_{OUT}}{1-D}$$

$$I_{L2AVE} = I_{OUT}$$

Peak to peak ripple current, to calculate core loss if necessary:

$$\Delta I_{L1} = \frac{(V_{IN} - V_Q)\,D}{(L1)f_S}$$

$$\Delta I_{L2} = \frac{(V_{IN} - V_Q)\,D}{(L2)f_S}$$

maintains the condition $I_L > \Delta i_L/2$ to ensure constant current mode.

$$L1 > \frac{(V_{IN} - V_Q)(1-D)}{2I_{OUT}f_S}$$

Designing SEPIC Using LM3488

(Continued)

$$L2 > \frac{(V_{IN} - V_Q)D}{2I_{OUT}f_S}$$

Peak current in the inductor, to ensure the inductor does not saturate:

$$I_{L1PK} = \frac{DI_{OUT}}{1\text{-}D} + \frac{\Delta I_{L1}}{2}$$

$$I_{L2PK} = I_{OUT} + \frac{\Delta I_{L2}}{2}$$

I_{L1PK} must be lower than the maximum current rating set by the current sense resistor.

The value of L1 can be increased above the minimum recommended to reduce input ripple and output ripple. However, once D_{IL1} is less than 20% of I_{L1AVE}, the benefit to output ripple is minimal.

By increasing the value of L2 above the minimum recommended, Δ_{IL2} can be reduced, which in turn will reduce the output ripple voltage:

$$\Delta V_{OUT} = \left(\frac{I_{OUT}}{1\text{-}D} + \frac{\Delta I_{L2}}{2}\right) ESR$$

where ESR is the effective series resistance of the output capacitor.

If L1 and L2 are wound on the same core, then L1 = L2 = L. All the equations above will hold true if the inductance is replaced by 2L. A good choice for transformer with equal turns is Coiltronics CTX series Octopack.

SENSE RESISTOR SELECTION

The peak current through the switch, $I_{SW(PEAK)}$ can be adjusted using the current sense resistor, R_{SEN}, to provide a certain output current. Resistor R_{SEN} can be selected using the formula:

$$R_{SEN} = \frac{V_{SENSE} - D(V_{SL} + \Delta V_{SL})}{I_{SWPEAK}}$$

Sepic Capacitor Selection

The selection of SEPIC capacitor, CS, depends on the rms current. The rms current of the SEPIC capacitor is given by:

$$I_{CSRMS} = \sqrt{I_{SWRMS}^2 + \left(I_{L1PK}^2 - I_{L1PK}\Delta I_{L1} + \Delta I_{L1}^2\right)\left(1\text{-}D\right)}$$

The SEPIC capacitor must be rated for a large ACrms current relative to the output power. This property makes the SEPIC much better suited to lower power applications where the rms current through the capacitor is relatively small (relative to capacitor technology). The voltage rating of the SEPIC capacitor must be greater than the maximum input voltage. Tantalum capacitors are the best choice for SMT, having high rms current ratings relative to size. Ceramic capacitors could be used, but the low C values will tend to cause larger changes in voltage across the capacitor due to the large currents. High C value ceramics are expensive. Electrolytics work well for through hole applications where the size required to meet the rms current rating can be accommodated. There is an energy balance between CS and L1, which can be used to determine the value of the capacitor. The basic energy balance equation is:

$$\frac{1}{2}C_S\Delta V_S^2 = \frac{1}{2}\ L_1\Delta I_{L1}^2$$

Where

$$\Delta V_S = \left(\frac{V_{OUT}}{V_{OUT} + V_{IN} - V_Q + V_{DIODE}}\right)\frac{I_{OUT}}{f_S C_S}$$

is the ripple voltage across the SEPIC capacitor, and

$$\Delta I_{L1} = \frac{(V_{IN} - V_Q)\ D}{L_1 f_S}$$

is the ripple current through the inductor L1. The energy balance equation can be solved to provide a minimum value for C_S:

$$C_S \geq L_1 \frac{I_{OUT}^2}{(V_{IN} - V_Q)^2}$$

Input Capacitor Selection

Similar to a boost converter, the SEPIC has an inductor at the input. Hence, the input current waveform is continuous and triangular. The inductor ensures that the input capacitor sees fairly low ripple currents. However, as the input capacitor gets smaller, the input ripple goes up. The rms current in the input capacitor is given by:

$$I_{CIN(RMS)} = \Delta I_{L1}/\sqrt{12} = \frac{D}{2\sqrt{3}}\left(\frac{V_{IN} - V_Q}{L_1 f_S}\right)$$

The input capacitor should be capable of handling the rms current. Although the input capacitor is not as critical in a boost application, low values can cause impedance interactions. Therefore a good quality capacitor should be chosen in the range of 100µF to 200µF. If a value lower than 100µF is used, then problems with impedance interactions or switching noise can affect the LM3478. To improve performance, especially with V_{IN} below 8 volts, it is recommended to use a 20Ω resistor at the input to provide a RC filter. The resistor is placed in series with the V_{IN} pin with only a bypass capacitor attached to the V_{IN} pin directly (see *Figure 13*). A 0.1µF or 1µF ceramic capacitor is necessary in this configuration. The bulk input capacitor and inductor will connect on the other side of the resistor with the input power supply.

Output Capacitor Selection

The ESR and ESL of the output capacitor directly control the output ripple. Use low capacitors with low ESR and ESL at

Output Capacitor Selection

(Continued)

the output for high efficiency and low ripple voltage. Surface mount tantalums, surface mount polymer electrolytic and polymer tantalum, Sanyo- OSCON, or multi-layer ceramic capacitors are recommended at the output.

The output capacitor of the SEPIC sees very large ripple currents (similar to the output capacitor of a boost converter. The rms current through the output capacitor is given by:

$$I_{RMS} = \sqrt{\left[I_{SWPK}^2 - I_{SWPK}\,(\Delta I_{L1} + \Delta I_{L2}) + \frac{(\Delta I_{L1} + \Delta I_{L2})^2}{3}\right](1-D) - I_{OUT}^2}$$

The ESR and ESL of the output capacitor directly control the output ripple. Use low capacitors with low ESR and ESL at the output for high efficiency and low ripple voltage. Surface mount tantalums, surface mount polymer electrolytic and polymer tantalum, Sanyo- OSCON, or multi-layer ceramic capacitors are recommended at the output for low ripple.

Other Application Circuits

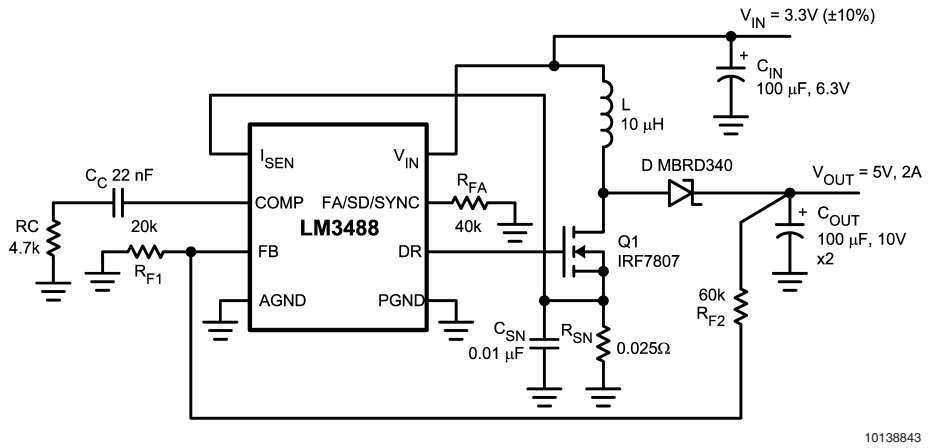

FIGURE 15. Typical High Efficiency Step-Up (Boost) Converter

Physical Dimensions inches (millimeters)

unless otherwise noted

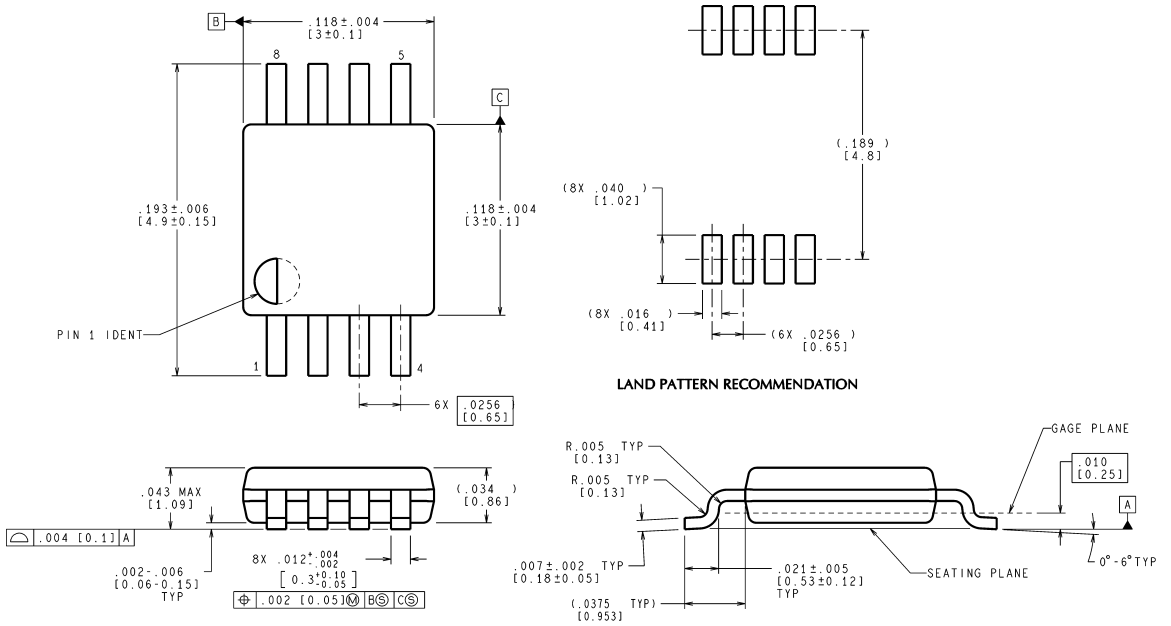

MUA08A (Rev E)

National does not assume any responsibility for use of any circuitry described, no circuit patent licenses are implied and National reserves the right at any time without notice to change said circuitry and specifications.

For the most current product information visit us at www.national.com.

LIFE SUPPORT POLICY

NATIONAL'S PRODUCTS ARE NOT AUTHORIZED FOR USE AS CRITICAL COMPONENTS IN LIFE SUPPORT DEVICES OR SYSTEMS WITHOUT THE EXPRESS WRITTEN APPROVAL OF THE PRESIDENT AND GENERAL COUNSEL OF NATIONAL SEMICONDUCTOR CORPORATION. As used herein:

1. Life support devices or systems are devices or systems which, (a) are intended for surgical implant into the body, or (b) support or sustain life, and whose failure to perform when properly used in accordance with instructions for use provided in the labeling, can be reasonably expected to result in a significant injury to the user.
2. A critical component is any component of a life support device or system whose failure to perform can be reasonably expected to cause the failure of the life support device or system, or to affect its safety or effectiveness.

BANNED SUBSTANCE COMPLIANCE

National Semiconductor manufactures products and uses packing materials that meet the provisions of the Customer Products Stewardship Specification (CSP-9-111C2) and the Banned Substances and Materials of Interest Specification (CSP-9-111S2) and contain no "Banned Substances" as defined in CSP-9-111S2.

National Semiconductor
Americas Customer
Support Center
Email: new.feedback@nsc.com
Tel: 1-800-272-9959

www.national.com

National Semiconductor
Europe Customer Support Center
Fax: +49 (0) 180-530 85 86
Email: europe.support@nsc.com
Deutsch Tel: +49 (0) 69 9508 6208
English Tel: +44 (0) 870 24 0 2171
Français Tel: +33 (0) 1 41 91 8790

National Semiconductor
Asia Pacific Customer
Support Center
Email: ap.support@nsc.com

National Semiconductor
Japan Customer Support Center
Fax: 81-3-5639-7507
Email: jpn.feedback@nsc.com
Tel: 81-3-5639-7560