查询LM2462供应商 捷多邦，专业PCB打样工厂，24小时加急出货

National Semiconductor

February 2002

LM2462
Monolithic Triple 3 ns CRT Driver

General Description

The LM2462 is an integrated high voltage CRT driver circuit designed for use in color monitor applications. The IC contains three high input impedance, wide band amplifiers which directly drive the RGB cathodes of a CRT. Each channel has its gain internally set to −20 and can drive CRT capacitive loads as well as resistive loads present in other applications, limited only by the package's power dissipation.

The IC is packaged in an industry standard 11-lead TO-220 molded plastic power package. See Thermal Considerations section.

Features

- Higher gain to match LM126X CMOS preamplifiers
- 0V to 3.75V input range
- Stable with 0–20 pF capacitive loads and inductive peaking networks
- Convenient TO-220 staggered lead package style
- Maintains standard LM240X Family pinout which is designed for easy PCB layout

Applications

- 1600 x 1200 displays up to 85Hz refresh
- Pixel clock frequencies up to 230 MHz
- Monitors using video blanking

Schematic and Connection Diagrams

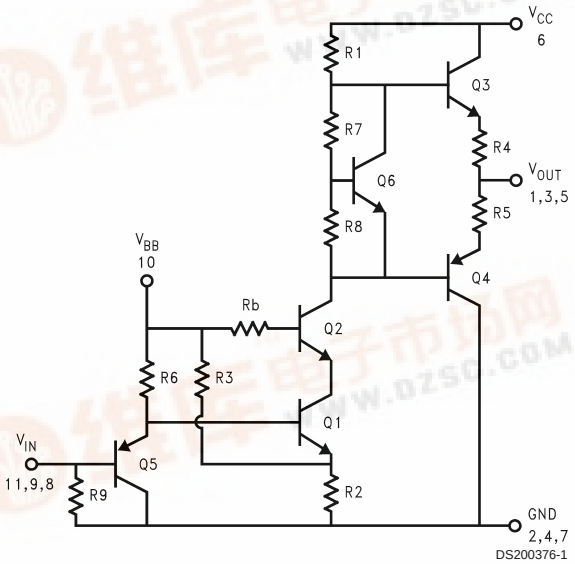

FIGURE 1. Simplified Schematic Diagram (One Channel)

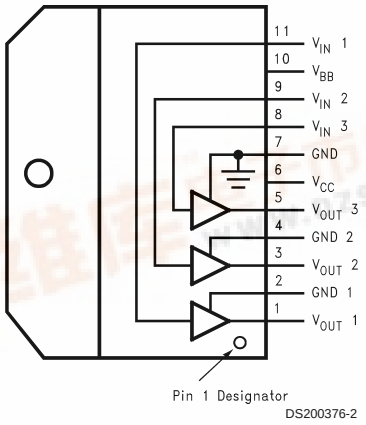

Note: Tab is at GND

Top View
Order Number LM2462TA
NS Package Number: TA11B

找PDF 维库一下 pdf.dzsc.com

Absolute Maximum Ratings (Notes 1, 3)

If Military/Aerospace specified devices are required, please contact the National Semiconductor Sales Office/ Distributors for availability and specifications.

Supply Voltage (V_{CC})	+90V
Bias Voltage (V_{BB})	+16V
Input Voltage (V_{IN})	0V to 4.5V
Storage Temperature Range (T_{STG})	−65˚C to +150˚C
Lead Temperature (Soldering, <10 sec.)	300˚C
ESD Tolerance, Human Body Model	2kV
Machine Model	250V

Operating Ranges (Note 2)

V_{CC}	+60V to +85V
V_{BB}	+8V to +15V
V_{IN}	+0V to +3.75V
V_{OUT}	+15V to +75V
Case Temperature	−20˚C to +100˚C

Do not operate the part without a heat sink.

Electrical Characteristics

(See *Figure 2* for Test Circuit)
Unless otherwise noted: V_{CC} = +80V, V_{BB} = +12V, C_L = 8 pF, T_C = 50˚C
DC Tests: V_{IN} = 2.25VDC
AC Tests: Output = 40V_{PP}(25V - 65V) at 1MHz

Symbol	Parameter	Conditions	LM2462			Units
			Min	Typical	Max	
I_{CC}	Supply Current	All Three Channels, No Input Signal, No Output Load		63		mA
I_{BB}	Bias Current	All Three Channels		42		mA
V_{OUT}	DC Output Voltage	No AC Input Signal, V_{IN} = 1.25V	62	65	68	V_{DC}
A_V	DC Voltage Gain	No AC Input Signal	−18	−20	−22	
ΔA_V	Gain Matching	(Note 4), No AC Input Signal		1.0		dB
LE	Linearity Error	(Notes 4, 5), No AC Input Signal		8		%
t_R	Rise Time	(Note 6), 10% to 90%		3.0	3.8	ns
t_F	Fall Time	(Note 6), 90% to 10%		3.3	4.1	ns
OS	Overshoot	(Note 6)		8		%

Note 1: Absolute Maximum Ratings indicate limits beyond which damage to the device may occur.

Note 2: Operating ratings indicate conditions for which the device is functional, but do not guarantee specific performance limits. For guaranteed specifications and test conditions, see the Electrical Characteristics. Datasheet min/max specification limits are guaranteed by design, test, or statistical analysis. The guaranteed specifications apply only for the test conditions listed. Some performance characteristics may change when the device is not operated under the listed test conditions.

Note 3: All voltages are measured with respect to GND, unless otherwise specified.

Note 4: Calculated value from Voltage Gain test on each channel.

Note 5: Linearity Error is the variation in dc gain from V_{IN} = 1.0V to V_{IN} = 3.5V.

Note 6: Input from signal generator: t_r, t_f < 1 ns.

Note 7: Datasheet min/max specification limits are guaranteed by design, test, or statistical analysis.

AC Test Circuit

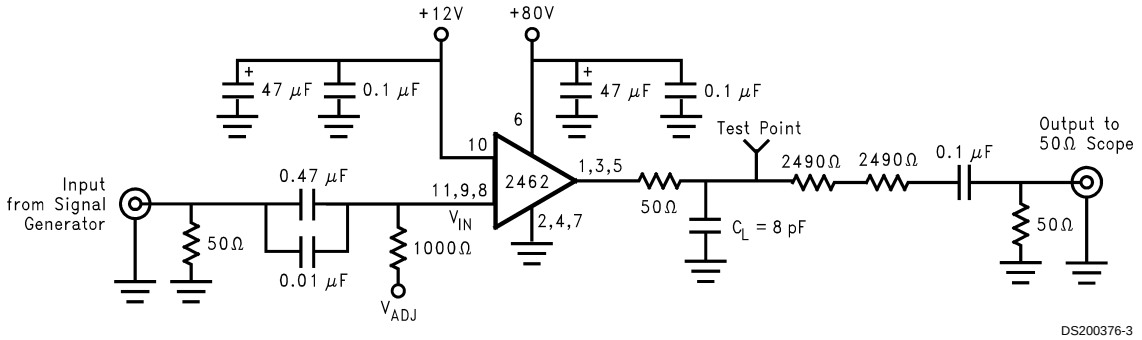

Note: 8 pF load includes parasitic capacitance.

FIGURE 2. Test Circuit (One Channel)

Figure 2 shows a typical test circuit for evaluation of the LM2462. This circuit is designed to allow testing of the LM2462 in a 50Ω environment without the use of an expensive FET probe. The two 2490Ω resistors form a 200:1 divider with the 50Ω resistor and the oscilloscope. A test point is included for easy use of an oscilloscope probe.

Typical Performance Characteristics (V_{CC} = +80V_{DC}, V_{BB} = +12V_{DC}, C_L = 8pF, V_{OUT} = 40V_{PP} (25V−65V), T_{CASE} = 60˚C, Test Circuit - *Figure 2* unless otherwise specified)

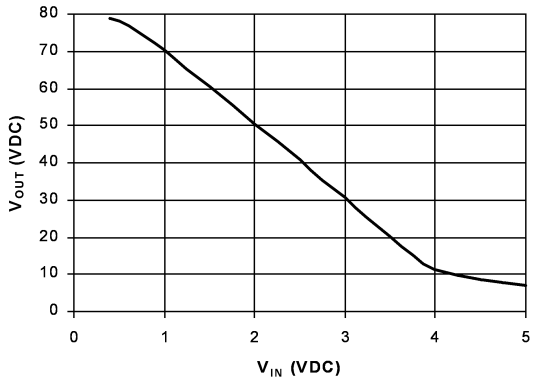

DS200376-19

FIGURE 3. V_{OUT} vs V_{IN}

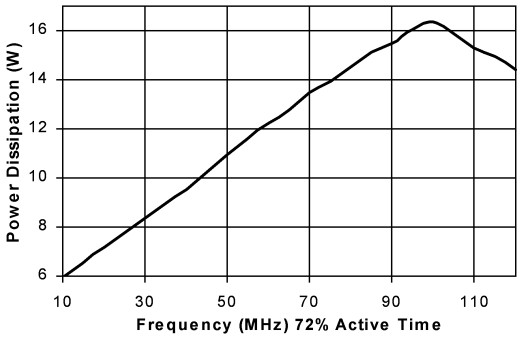

DS200376-24

FIGURE 6. Power Dissipation vs Frequency

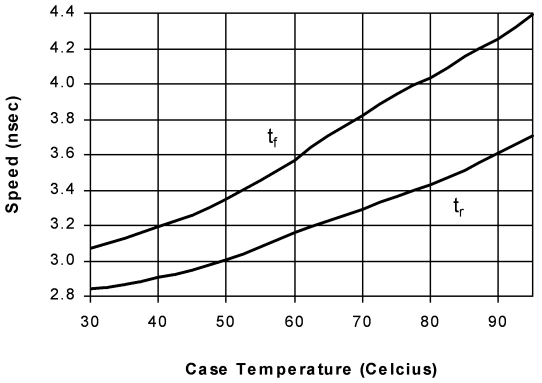

DS200376-17

FIGURE 4. Speed vs Temp.

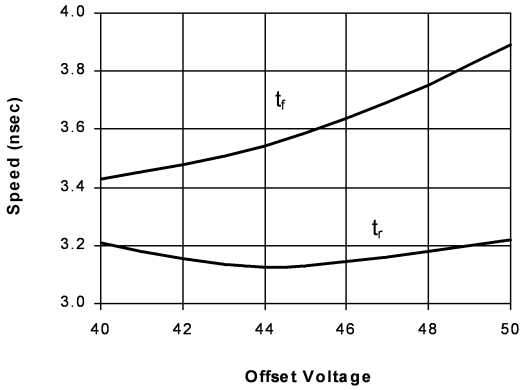

DS200376-18

FIGURE 7. Speed vs Offset

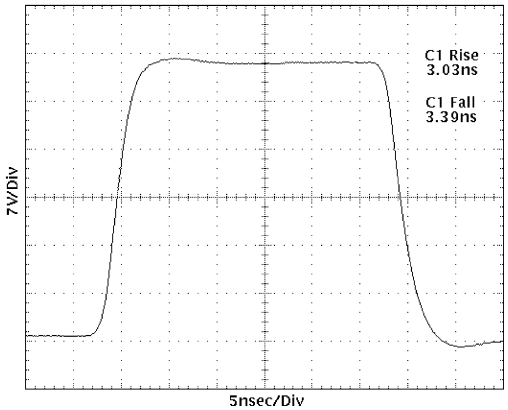

DS200376-25

FIGURE 5. LM2462 Pulse Response
T_{CASE} = 50˚C

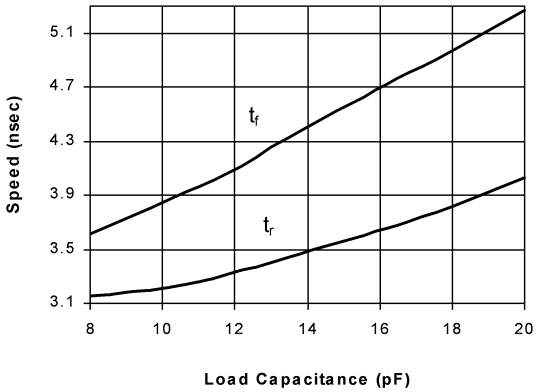

DS200376-16

FIGURE 8. Speed vs Load Capacitance

Theory of Operation

The LM2462 is a high voltage monolithic three channel CRT driver suitable for high resolution display applications. The LM2462 operates with 80V and 12V power supplies. The part is housed in the industry standard 11-lead TO-220 molded plastic power package.

The circuit diagram of the LM2462 is shown in *Figure 1*. The PNP emitter follower, Q5, provides input buffering. Q1 and Q2 form a fixed gain cascode amplifier with resistors R1 and R2 setting the gain at −20. Emitter followers Q3 and Q4 isolate the high output impedance of the cascode stage from the capacitance of the CRT cathode which decreases the sensitivity of the device to changes in load capacitance. Q6 provides biasing to the output emitter follower stage to reduce crossover distortion at low signal levels.

Figure 2 shows a typical test circuit for evaluation of the LM2462. This circuit is designed to allow testing of the LM2462 in a 50Ω environment without the use of an expensive FET probe. In this test circuit, the two 2.49kΩ resistors form a 200:1 wideband, low capacitance probe when connected to a 50Ω coaxial cable and a 50Ω load (such as a 50Ω oscilloscope input). The input signal from the generator is ac coupled to the base of Q5.

Application Hints

INTRODUCTION

National Semiconductor (NSC) is committed to provide application information that assists our customers in obtaining the best performance possible from our products. The following information is provided in order to support this commitment. The reader should be aware that the optimization of performance was done using a specific printed circuit board designed at NSC. Variations in performance can be realized due to physical changes in the printed circuit board and the application. Therefore, the designer should know that component value changes may be required in order to optimize performance in a given application. The values shown in this document can be used as a starting point for evaluation purposes. When working with high bandwidth circuits, good layout practices are also critical to achieving maximum performance.

IMPORTANT INFORMATION

The LM2462 performance is targeted for the high end 19“ and 21“ market with resolutions up to 1600 x 1200 and an 85Hz refresh rate. The application circuits shown in this document were specifically designed to optimize the performance of the LM2462 as well as protect it from damage due to a CRT arc-over. If another member of the LM246X family is used, please refer to its datasheet.

POWER SUPPLY BYPASS

Since the LM2462 is a wide bandwidth amplifier, proper power supply bypassing is critical for optimum performance. Improper power supply bypassing can result in large overshoot, ringing or oscillation. 0.1 µF capacitors should be connected from the supply pins, V_{CC} and V_{BB}, to ground, as close to the LM2462 as is practical. Additionally, a 47 µF or larger electrolytic capacitor should be connected from both supply pins to ground reasonably close to the LM2462.

ARC PROTECTION

During normal CRT operation, internal arcing may occasionally occur. Spark gaps, in the range of 200V, connected from the CRT cathodes to CRT ground will limit the maximum voltage, but to a value that is much higher than allowable on the LM2462. This fast, high voltage, high energy pulse can damage the LM2462 output stage. The application circuit shown in *Figure 9* is designed to help clamp the voltage at the output of the LM2462 to a safe level. The clamp diodes, D1 and D2, should have a fast transient response, high peak current rating, low series impedance and low shunt capacitance. FDH400 or equivalent diodes are recommended. Do not use 1N4148 diodes for the clamp diodes. D1 and D2 should have short, low impedance connections to V_{CC} and ground respectively. The cathode of D1 should be located very close to a separately decoupled bypass capacitor (C3 in *Figure 9*). The ground connection of D2 and the decoupling capacitor should be very close to the LM2462 ground. This will significantly reduce the high frequency voltage transients that the LM2462 would be subjected to during an arcover condition. Resistor R2 limits the arcover current that is seen by the diodes while R1 limits the current into the LM2462 as well as the voltage stress at the outputs of the device. R2 should be a ½W solid carbon type resistor. R1 can be a ¼W metal or carbon film type resistor. Having large value resistors for R1 and R2 would be desirable, but this has the effect of increasing rise and fall times. Inductor L1 is critical to reduce the initial high frequency voltage levels that the LM2462 would be subjected to. The inductor will not only help protect the device but it will also help optimize rise and fall times as well as minimize EMI. For proper arc protection, it is important to not omit any of the arc protection components shown in *Figure 9*.

Application Hints (Continued)

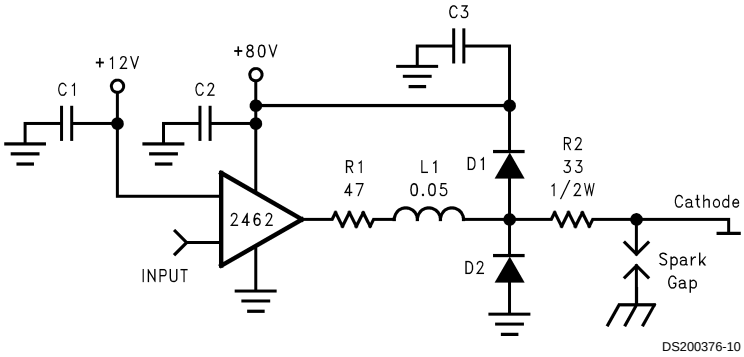

FIGURE 9. One Channel of the LM2462 with the Recommended Arc Protection Circuit

OPTIMIZING TRANSIENT RESPONSE

Referring to *Figure 9*, there are three components (R1, R2 and L1) that can be adjusted to optimize the transient response of the application circuit. Increasing the values of R1 and R2 will slow the circuit down while decreasing overshoot. Increasing the value of L1 will speed up the circuit as well as increase overshoot. It is very important to use inductors with very high self-resonant frequencies, preferably above 300 MHz. Ferrite core inductors from J.W. Miller Magnetics (part # 78-FRK) were used for optimizing the performance of the device in the NSC application board. The values shown in *Figure 9* can be used as a good starting point for the evaluation of the LM2462. Using a variable resistor for R1 will simplify finding the value needed for optimum performance in a given application. Once the optimum value is determined, the variable resistor can be replaced with a fixed value.

EFFECT OF LOAD CAPACITANCE

Figure 8 shows the effect of increased load capacitance on the speed of the device. This demonstrates the importance of knowing the load capacitance in the application. The rise time increased about 0.08 nsec for an increase of 1 pF in the load capacitance. The fall time increased about 0.14 nsec for a 1 pF increase in the load capacitance.

EFFECT OF OFFSET

Figure 7 shows the variation in rise and fall times when the output offset of the device is varied from 40 to 50 V_{DC}. The rise time varies less than 0.10 nsec. The fall time varies a little under 0.50 nsec, but only 0.15 nsec from the fastest fall time at 40V offset.

THERMAL CONSIDERATIONS

Figure 4 shows the performance of the LM2462 in the test circuit shown in *Figure 2* as a function of case temperature. The figure shows that both the rise and fall times of the LM2462 increase by approximately 46% as the case temperature increases from 30˚C to 95˚C. This corresponds to a speed degradation of 7.1% for every 10˚C rise in case temperature.

Figure 6 shows the maximum power dissipation of the LM2462 vs. Frequency when all three channels of the device are driving an 8pF load with a $40V_{p-p}$ alternating one pixel on, one pixel off. The graph assumes a 72% active time (device operating at the specified frequency) which is typical in a monitor application. The other 28% of the time the device is assumed to be sitting at the black level (65V in this case). This graph gives the designer the information needed to determine the heat sink requirement for his application. The designer should note that if the load capacitance is increased the AC component of the total power dissipation will also increase.

The LM2462 case temperature must be maintained below 100˚C. If the maximum expected ambient temperature is 65˚C and the maximum power dissipation is 16.5W (from *Figure 6*, 100MHz bandwidth) then a maximum heat sink thermal resistance can be calculated:

$$R_{TH} = \frac{100°C - 65°C}{16.5W} = 2.1°C/W$$

This example assumes a capacitive load of 8 pF and no resistive load.

TYPICAL APPLICATION

A typical application of the LM2462 is shown in *Figure 10* and *Figure 11*. Used in conjunction with an LM1262 video pre-amp and an LM2479/2480 bias clamp, a complete video channel from monitor input to CRT cathode can be achieved. Performance is ideal for 1600 X 1200 resolution displays with pixel clock frequencies up to 230MHz. *Figure 10* and *Figure 11* are the schematic for the NSC demonstration board that can be used to evaluate the LM1262/2462/2480 combination in a monitor.

PC BOARD LAYOUT CONSIDERATIONS

For optimum performance, an adequate ground plane, isolation between channels, good supply bypassing and minimizing unwanted feedback are necessary. Also, the length of the signal traces from the preamplifier to the LM2462 and from the LM2462 to the CRT cathode should be as short as possible. The following references are recommended:

Ott, Henry W., “Noise Reduction Techniques in Electronic Systems”, John Wiley & Sons, New York, 1976.

“Video Amplifier Design for Computer Monitors”, National Semiconductor Application Note 1013.

Pease, Robert A., “Troubleshooting Analog Circuits”, Butterworth-Heinemann, 1991.

Because of its high small signal bandwidth, the part may oscillate in a monitor if feedback occurs around the video channel through the chassis wiring. To prevent this, leads to the video amplifier input circuit should be shielded, and input circuit wiring should be spaced as far as possible from output circuit wiring.

Application Hints (Continued)

NSC DEMONSTRATION BOARD

Figure 12 shows the routing and component placement on the NSC LM126X/246X demonstration board. The schematic of the board is shown in *Figure 10* and *Figure 11*. This board provides a good example of a layout that can be used as a guide for future layouts. Note the location of the following components:

- C16, C19 — V_{CC} bypass capacitor, located very close to pin 4 and ground pins
- C17, C20 — V_{BB} bypass capacitors, located close to pin 8 and ground
- C46, C47, C48 — V_{CC} bypass capacitors, near LM2462 and V_{CC} clamp diodes. Very important for arc protection.

The routing of the LM2462 outputs to the CRT is very critical to achieving optimum performance. *Figure 13* shows the routing and component placement from pin 1 of the LM2462 to the blue cathode. The white line through the PCB traces show the path of the blue video. Note that the components are placed so that they almost line up from the output pin of the LM2462 to the blue cathode pin of the CRT connector. This is done to minimize the length of the video path between these two components. Note also that D8, D9, R24 and D6 are placed to minimize the size of the video nodes that they are attached to. This minimizes parasitic capacitance in the video path and also enhances the effectiveness of the protection diodes. The anode of protection diode D8 is connected directly to a section of the ground plane that has a short and direct path to the LM2462 ground pins. The cathode of D9 is connected to V_{CC} very close to decoupling capacitor C48 (see *Figure 13*) which is connected to the same section of the ground plane as D8. The diode placement and routing is very important for minimizing the voltage stress on the LM2462 during an arc-over event. Lastly, notice that S3 is placed very close to the blue cathode and is tied directly to CRT ground.

Application Hints (Continued)

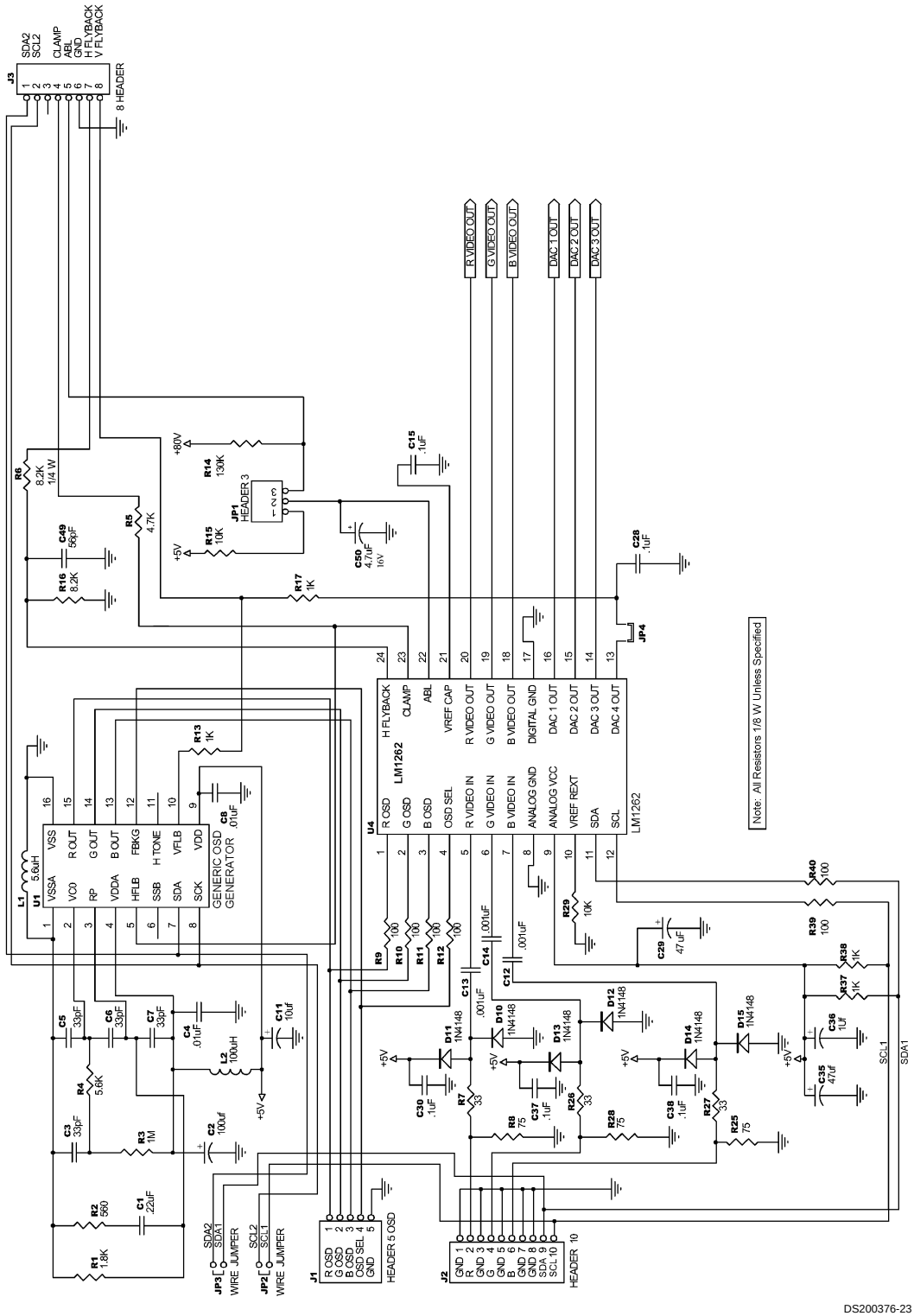

FIGURE 10. LM126X/LM246X Demonstration Board Schematic

Application Hints (Continued)

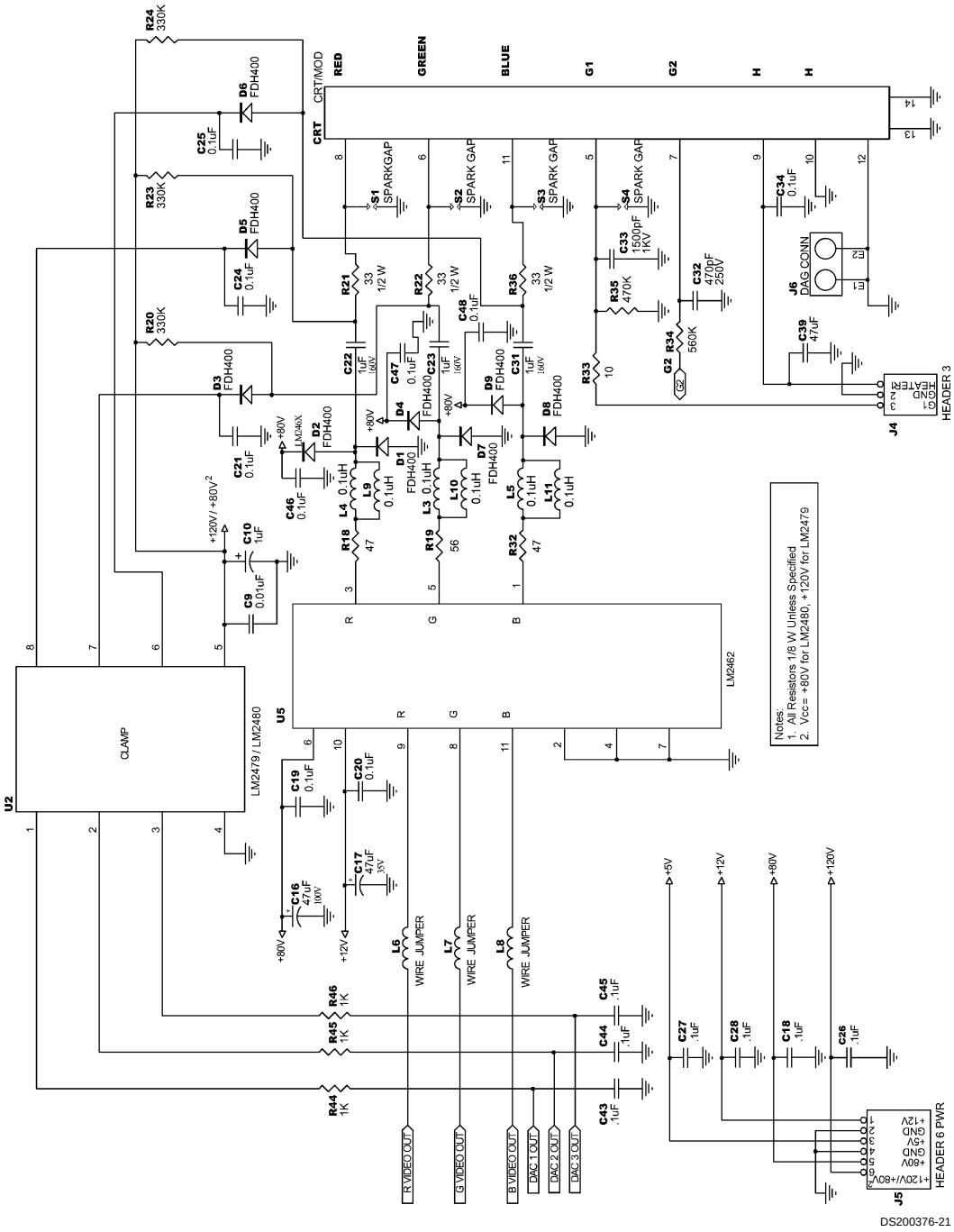

DS200376-21

FIGURE 11. LM126X/LM246X Demonstration Board Schematic (continued)

Application Hints (Continued)

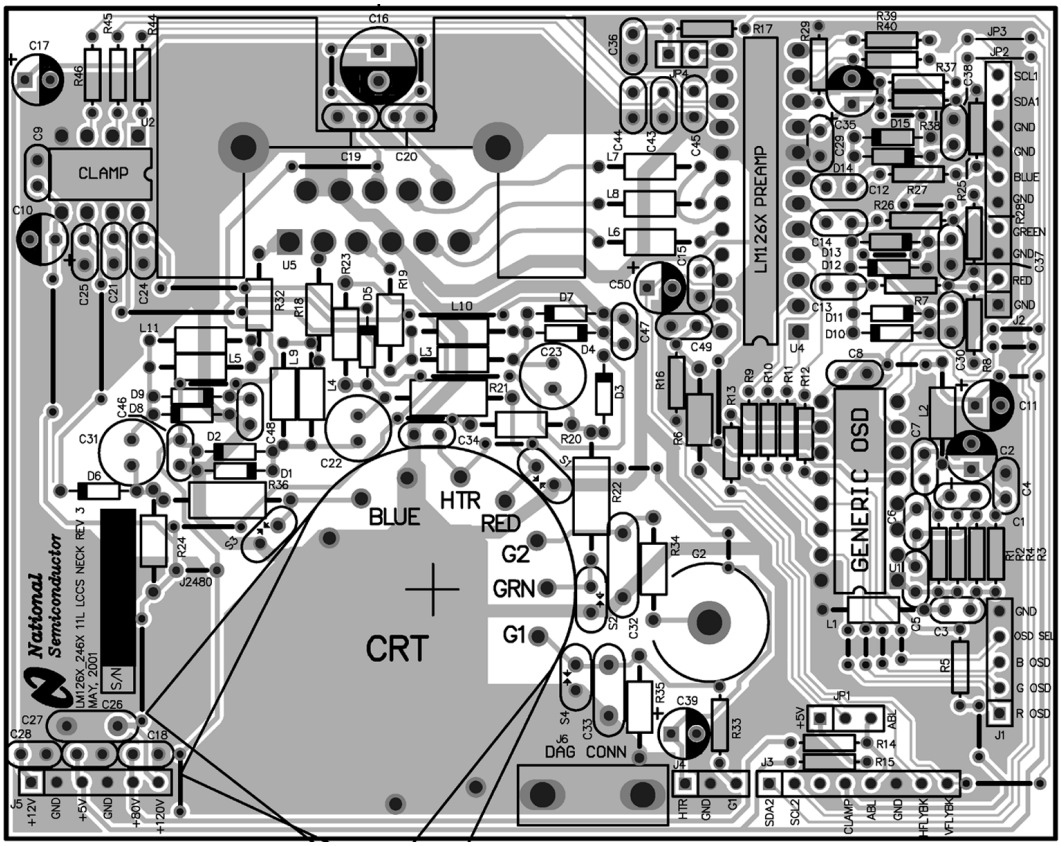

DS200376-22

FIGURE 12. LM126X/LM246X Demo Board Layout

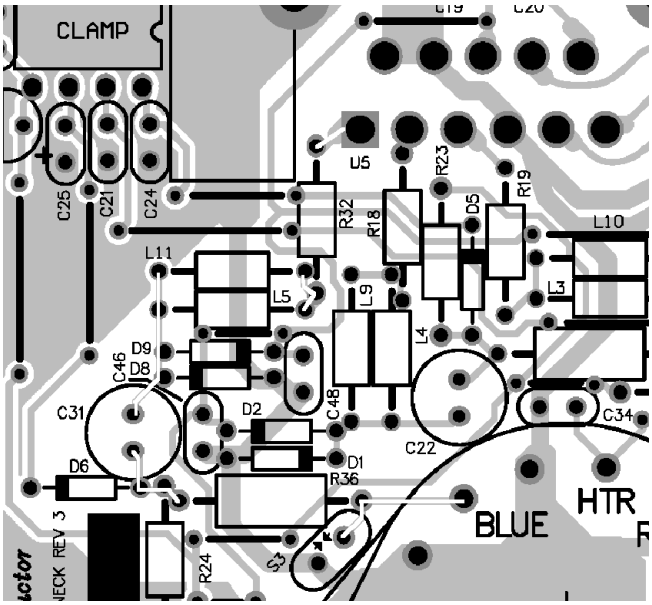

DS200376-20

FIGURE 13. Trace Routing and Component Placement for Blue Channel Output

Physical Dimensions inches (millimeters) unless otherwise noted

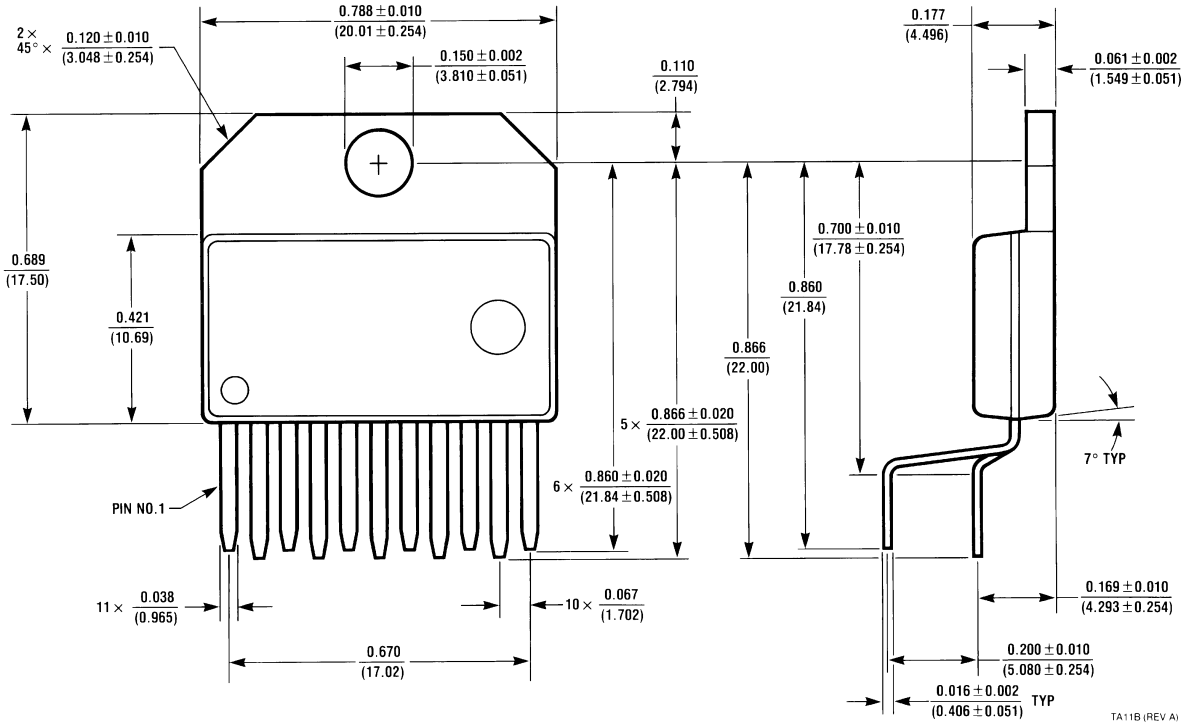

CONTROLLING DIMENSION IS INCH
VALUES IN [ ] ARE MILLIMETERS

NS Package Number TA11B
Order Number LM2462TA

LIFE SUPPORT POLICY

NATIONAL'S PRODUCTS ARE NOT AUTHORIZED FOR USE AS CRITICAL COMPONENTS IN LIFE SUPPORT DEVICES OR SYSTEMS WITHOUT THE EXPRESS WRITTEN APPROVAL OF THE PRESIDENT AND GENERAL COUNSEL OF NATIONAL SEMICONDUCTOR CORPORATION. As used herein:

1. Life support devices or systems are devices or systems which, (a) are intended for surgical implant into the body, or (b) support or sustain life, and whose failure to perform when properly used in accordance with instructions for use provided in the labeling, can be reasonably expected to result in a significant injury to the user.
2. A critical component is any component of a life support device or system whose failure to perform can be reasonably expected to cause the failure of the life support device or system, or to affect its safety or effectiveness.

National Semiconductor Corporation
Americas
Email: support@nsc.com

www.national.com

National Semiconductor Europe
Fax: +49 (0) 180-530 85 86
Email: europe.support@nsc.com
Deutsch Tel: +49 (0) 69 9508 6208
English Tel: +44 (0) 870 24 0 2171
Français Tel: +33 (0) 1 41 91 8790

National Semiconductor Asia Pacific Customer Response Group
Tel: 65-2544466
Fax: 65-2504466
Email: ap.support@nsc.com

National Semiconductor Japan Ltd.
Tel: 81-3-5639-7560
Fax: 81-3-5639-7507

National does not assume any responsibility for use of any circuitry described, no circuit patent licenses are implied and National reserves the right at any time without notice to change said circuitry and specifications.