查询CY2309ZXC-1H供应商 捷多邦，专业PCB打样工厂，24小时加急出货

CYPRESS

CY2305
CY2309

Low-Cost 3.3V Zero Delay Buffer

Features

- **10-MHz to 100-/133-MHz operating range, compatible with CPU and PCI bus frequencies**
- **Zero input-output propagation delay**
- **60 ps typical cycle-to-cycle jitter (high drive)**
- **Multiple low-skew outputs**
  - **— 85 ps typical output-to-output skew**
  - **— One input drives five outputs (CY2305)**
  - **— One input drives nine outputs, grouped as 4 + 4 + 1 (CY2309)**
- **Compatible with Pentium®-based systems**
- **Test Mode to bypass phase-locked loop (PLL) (CY2309 only [see "Select Input Decoding" on page 2])**
- **Available in space-saving 16-pin 150-mil SOIC or 4.4-mm TSSOP packages (CY2309), and 8-pin, 150-mil SOIC package (CY2305)**
- **3.3V operation**
- **Industrial temperature available**

Functional Description

The CY2309 is a low-cost 3.3V zero delay buffer designed to distribute high-speed clocks and is available in a 16-pin SOIC or TSSOP package. The CY2305 is an 8-pin version of the CY2309. It accepts one reference input, and drives out five low-skew clocks. The -1H versions of each device operate at up to 100-/133-MHz frequencies, and have higher drive than the -1 devices. All parts have on-chip PLLs which lock to an input clock on the REF pin. The PLL feedback is on-chip and is obtained from the CLKOUT pad.

The CY2309 has two banks of four outputs each, which can be controlled by the Select inputs as shown in the "Select Input Decoding" table on page 2. If all output clocks are not required, BankB can be three-stated. The select inputs also allow the input clock to be directly applied to the outputs for chip and system testing purposes.

The CY2305 and CY2309 PLLs enter a power-down mode when there are no rising edges on the REF input. In this state, the outputs are three-stated and the PLL is turned off, resulting in less than 12.0 μA of current draw for commercial temperature devices and 25.0 μA for industrial temperature parts. The CY2309 PLL shuts down in one additional case as shown in the table below.

Multiple CY2305 and CY2309 devices can accept the same input clock and distribute it. In this case, the skew between the outputs of two devices is guaranteed to be less than 700 ps.

The CY2305/CY2309 is available in two/three different configurations, as shown in the ordering information (page 10). The CY2305-1/CY2309-1 is the base part. The CY2305-1H/CY2309-1H is the high-drive version of the -1, and its rise and fall times are much faster than the -1s.

Block Diagram

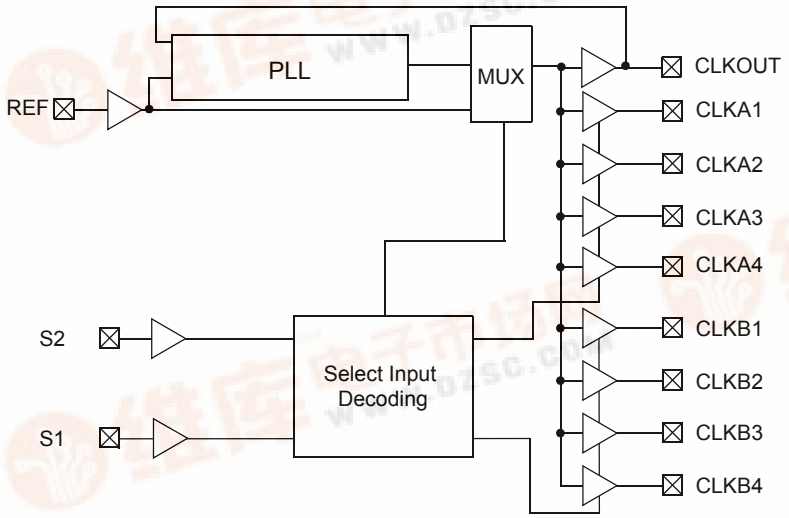

Pin Configuration

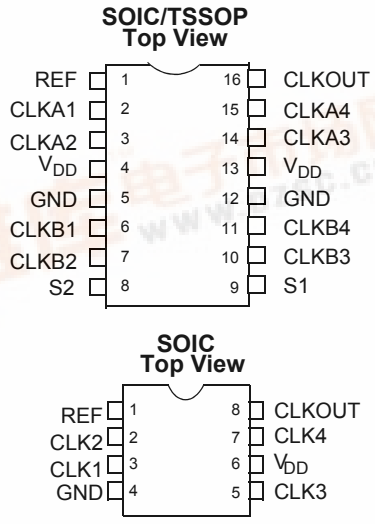

找PDF 维库一下 pdf.dzsc.com

Pin Description for CY2309

Pin	Signal	Description
1	REF[1]	Input reference frequency, 5V-tolerant input
2	CLKA1[2]	Buffered clock output, Bank A
3	CLKA2[2]	Buffered clock output, Bank A
4	V_{DD}	3.3V supply
5	GND	Ground
6	CLKB1[2]	Buffered clock output, Bank B
7	CLKB2[2]	Buffered clock output, Bank B
8	S2[3]	Select input, bit 2
9	S1[3]	Select input, bit 1
10	CLKB3[2]	Buffered clock output, Bank B
11	CLKB4[2]	Buffered clock output, Bank B
12	GND	Ground
13	V_{DD}	3.3V supply
14	CLKA3[2]	Buffered clock output, Bank A
15	CLKA4[2]	Buffered clock output, Bank A
16	CLKOUT[2]	Buffered output, internal feedback on this pin

Pin Description for CY2305

Pin	Signal	Description
1	REF[1]	Input reference frequency, 5V-tolerant input
2	CLK2[2]	Buffered clock output
3	CLK1[2]	Buffered clock output
4	GND	Ground
5	CLK3[2]	Buffered clock output
6	V_{DD}	3.3V supply
7	CLK4[2]	Buffered clock output
8	CLKOUT[2]	Buffered clock output, internal feedback on this pin

Select Input Decoding for CY2309

S2	S1	CLOCK A1–A4	CLOCK B1–B4	CLKOUT[4]	Output Source	PLL Shutdown
0	0	Three-state	Three-state	Driven	PLL	N
0	1	Driven	Three-state	Driven	PLL	N
1	0	Driven	Driven	Driven	Reference	Y
1	1	Driven	Driven	Driven	PLL	N

Notes:
1. Weak pull-down.
2. Weak pull-down on all outputs.
3. Weak pull-ups on these inputs.
4. This output is driven and has an internal feedback for the PLL. The load on this output can be adjusted to change the skew between the reference and output.

REF. Input to CLKA/CLKB Delay vs. Loading Difference between CLKOUT and CLKA/CLKB Pins

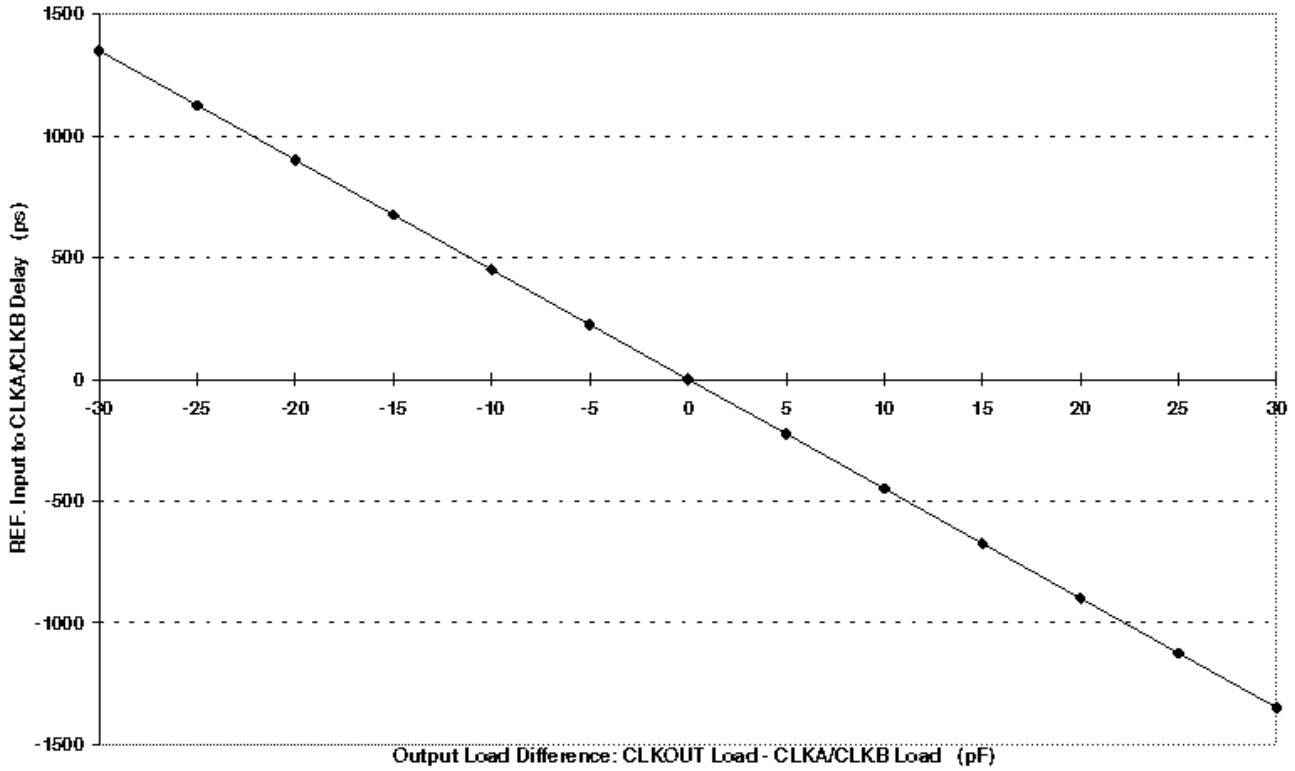

Zero Delay and Skew Control

All outputs should be uniformly loaded to achieve Zero Delay between the input and output. Since the CLKOUT pin is the internal feedback to the PLL, its relative loading can adjust the input-output delay. This is shown in the above graph.

For applications requiring zero input-output delay, all outputs, including CLKOUT, must be equally loaded. Even if CLKOUT is not used, it must have a capacitive load, equal to that on other outputs, for obtaining zero input-output delay. If input to output delay adjustments are required, use the above graph to calculate loading differences between the CLKOUT pin and other outputs.

For zero output-output skew, be sure to load all outputs equally. For further information refer to the application note entitled “CY2305 and CY2309 as PCI and SDRAM Buffers.”

Absolute Maximum Conditions

Supply Voltage to Ground Potential ..... –0.5V to +7.0V
DC Input Voltage (Except REF) .....–0.5V to V_{DD} + 0.5V
DC Input Voltage REF..... –0.5V to 7V
Storage Temperature ..... –65°C to +150°C
Junction Temperature..... 150°C
Static Discharge Voltage
(per MIL-STD-883, Method 3015) ..... > 2,000V

Operating Conditions for CY2305SC-XX and CY2309SC-XX Commercial Temperature Devices

Parameter	Description	Min.	Max.	Unit
V_{DD}	Supply Voltage	3.0	3.6	V
T_A	Operating Temperature (Ambient Temperature)	0	70	°C
C_L	Load Capacitance, below 100 MHz	–	30	pF
C_L	Load Capacitance, from 100 MHz to 133 MHz	–	10	pF
C_{IN}	Input Capacitance	–	7	pF
t_{PU}	Power-up time for all V_{DD}s to reach minimum specified voltage (power ramps must be monotonic)	0.05	50	ms

Electrical Characteristics for CY2305SC-XX and CY2309SC-XX Commercial Temperature Devices

Parameter	Description	Test Conditions	Min.	Max.	Unit
V_{IL}	Input LOW Voltage[5]		–	0.8	V
V_{IH}	Input HIGH Voltage[5]		2.0	–	V
I_{IL}	Input LOW Current	V_{IN} = 0V	–	50.0	µA
I_{IH}	Input HIGH Current	V_{IN} = V_{DD}	–	100.0	µA
V_{OL}	Output LOW Voltage[6]	I_{OL} = 8 mA (–1) I_{OH} = 12 mA (–1H)	–	0.4	V
V_{OH}	Output HIGH Voltage[6]	I_{OH} = –8 mA (–1) I_{OL} = –12 mA (–1H)	2.4	–	V
I_{DD} (PD mode)	Power Down Supply Current	REF = 0 MHz	–	12.0	µA
I_{DD}	Supply Current	Unloaded outputs at 66.67 MHz, SEL inputs at V_{DD}	–	32.0	mA

Switching Characteristics for CY2305SC-1and CY2309SC-1 Commercial Temperature Devices[7]

Parameter	Name	Test Conditions	Min.	Typ.	Max.	Unit
t1	Output Frequency	30-pF load 10-pF load	10 10	–	100 133.33	MHz MHz
	Duty Cycle[6] = $t_2 \div t_1$	Measured at 1.4V, F_{out} = 66.67 MHz	40.0	50.0	60.0	%
t3	Rise Time[6]	Measured between 0.8V and 2.0V	–	–	2.50	ns
t_4	Fall Time[6]	Measured between 0.8V and 2.0V	–	–	2.50	ns
t_5	Output to Output Skew[6]	All outputs equally loaded	–	85	250	ps
t_{6A}	Delay, REF Rising Edge to CLKOUT Rising Edge[6]	Measured at V_{DD}/2	–	0	±350	ps
t_{6B}	Delay, REF Rising Edge to CLKOUT Rising Edge[6]	Measured at V_{DD}/2. Measured in PLL Bypass Mode, CY2309 device only.	1	5	8.7	ns
t_7	Device to Device Skew[6]	Measured at V_{DD}/2 on the CLKOUT pins of devices	–	–	700	ps
t_J	Cycle to Cycle Jitter[6]	Measured at 66.67 MHz, loaded outputs	–	70	200	ps
t_{LOCK}	PLL Lock Time[6]	Stable power supply, valid clock presented on REF pin	–	–	1.0	ms

Notes:
5. REF input has a threshold voltage of V_{DD}/2.
6. Parameter is guaranteed by design and characterization. Not 100% tested in production.
7. All parameters specified with loaded outputs.

Switching Characteristics for CY2305SC-1H and CY2309SC-1H Commercial Temperature Devices[7]

Parameter	Name	Description	Min.	Typ.	Max.	Unit
t1	Output Frequency	30-pF load 10-pF load	10 10	–	100 133.33	MHz MHz
	Duty Cycle[6] = $t_2 \div t_1$	Measured at 1.4V, F_{out} = 66.67 MHz	40.0	50.0	60.0	%
	Duty Cycle[6] = $t_2 \div t_1$	Measured at 1.4V, F_{out} < 50.0 MHz	45.0	50.0	55.0	%
t3	Rise Time[6]	Measured between 0.8V and 2.0V	–	–	1.50	ns
t_4	Fall Time[6]	Measured between 0.8V and 2.0V	–	–	1.50	ns
t_5	Output to Output Skew[6]	All outputs equally loaded	–	85	250	ps
t_{6A}	Delay, REF Rising Edge to CLKOUT Rising Edge[6]	Measured at $V_{DD}/2$	–	–	±350	ps
t_{6B}	Delay, REF Rising Edge to CLKOUT Rising Edge[6]	Measured at $V_{DD}/2$. Measured in PLL Bypass Mode, CY2309 device only.	1	5	8.7	ns
t_7	Device to Device Skew[6]	Measured at $V_{DD}/2$ on the CLKOUT pins of devices	–	–	700	ps
t_8	Output Slew Rate[6]	Measured between 0.8V and 2.0V using Test Circuit #2	1	–		V/ns
t_J	Cycle to Cycle Jitter[6]	Measured at 66.67 MHz, loaded outputs	–	60	200	ps
t_{LOCK}	PLL Lock Time[6]	Stable power supply, valid clock presented on REF pin	–	–	1.0	ms

Operating Conditions for CY2305SI-XX and CY2309SI-XX Industrial Temperature Devices

Parameter	Description	Min.	Max.	Unit
V_{DD}	Supply Voltage	3.0	3.6	V
T_A	Operating Temperature (Ambient Temperature)	–40	85	°C
C_L	Load Capacitance, below 100 MHz	–	30	pF
C_L	Load Capacitance, from 100 MHz to 133 MHz	–	10	pF
C_{IN}	Input Capacitance	–	7	pF

Electrical Characteristics for CY2305SI-XX and CY2309SI-XX Industrial Temperature Devices

Parameter	Description	Test Conditions	Min.	Max.	Unit
V_{IL}	Input LOW Voltage[5]		–	0.8	V
V_{IH}	Input HIGH Voltage[5]		2.0	–	V
I_{IL}	Input LOW Current	V_{IN} = 0V	–	50.0	μA
I_{IH}	Input HIGH Current	$V_{IN} = V_{DD}$	–	100.0	μA
V_{OL}	Output LOW Voltage[6]	I_{OL} = 8 mA (–1) I_{OH} =12 mA (–1H)	–	0.4	V
V_{OH}	Output HIGH Voltage[6]	I_{OH} = –8 mA (–1) I_{OL} = –12 mA (–1H)	2.4	–	V
I_{DD} (PD mode)	Power-down Supply Current	REF = 0 MHz	–	25.0	μA
I_{DD}	Supply Current	Unloaded outputs at 66.67 MHz, SEL inputs at V_{DD}	–	35.0	mA

Switching Characteristics for CY2305SI-1and CY2309SI-1 Industrial Temperature Devices [7]

Parameter	Name	Test Conditions	Min.	Typ.	Max.	Unit
t1	Output Frequency	30-pF load 10-pF load	10 10	–	100 133.33	MHz MHz
	Duty Cycle[6] = $t_2 \div t_1$	Measured at 1.4V, F_{out} = 66.67 MHz	40.0	50.0	60.0	%
t3	Rise Time[6]	Measured between 0.8V and 2.0V	–	–	2.50	ns
t_4	Fall Time[6]	Measured between 0.8V and 2.0V	–	–	2.50	ns
t_5	Output to Output Skew[6]	All outputs equally loaded	–	85	250	ps
t_{6A}	Delay, REF Rising Edge to CLKOUT Rising Edge[6]	Measured at $V_{DD}/2$	–	–	±350	ps
t_{6B}	Delay, REF Rising Edge to CLKOUT Rising Edge[6]	Measured at $V_{DD}/2$. Measured in PLL Bypass Mode, CY2309 device only.	1	5	8.7	ns
t_7	Device to Device Skew[6]	Measured at $V_{DD}/2$ on the CLKOUT pins of devices	–	–	700	ps
t_J	Cycle to Cycle Jitter[6]	Measured at 66.67 MHz, loaded outputs	–	70	200	ps
t_{LOCK}	PLL Lock Time[6]	Stable power supply, valid clock presented on REF pin	–	–	1.0	ms

Switching Characteristics for CY2305SI-1H and CY2309SI-1H Industrial Temperature Devices[7]

Parameter	Name	Description	Min.	Typ.	Max.	Unit
t_1	Output Frequency	30-pF load 10-pF load	10 10	–	100 133.33	MHz MHz
	Duty Cycle[6] = $t_2 \div t_1$	Measured at 1.4V, F_{out} = 66.67 MHz	40.0	50.0	60.0	%
	Duty Cycle[6] = $t_2 \div t_1$	Measured at 1.4V, F_{out} < 50.0 MHz	45.0	50.0	55.0	%
t_3	Rise Time[6]	Measured between 0.8V and 2.0V	–	–	1.50	ns
t_4	Fall Time[6]	Measured between 0.8V and 2.0V	–	–	1.50	ns
t_5	Output to Output Skew[6]	All outputs equally loaded	–	85	250	ps
t_{6A}	Delay, REF Rising Edge to CLKOUT Rising Edge[6]	Measured at $V_{DD}/2$	–	–	±350	ps
t_{6B}	Delay, REF Rising Edge to CLKOUT Rising Edge[6]	Measured at $V_{DD}/2$. Measured in PLL Bypass Mode, CY2309 device only.	1	5	8.7	ns
t_7	Device to Device Skew[6]	Measured at $V_{DD}/2$ on the CLKOUT pins of devices	–	–	700	ps
t_8	Output Slew Rate[6]	Measured between 0.8V and 2.0V using Test Circuit #2	1	–	–	V/ns
t_J	Cycle to Cycle Jitter[6]	Measured at 66.67 MHz, loaded outputs	–	60	200	ps
t_{LOCK}	PLL Lock Time[6]	Stable power supply, valid clock presented on REF pin	–	–	1.0	ms

Switching Waveforms

Duty Cycle Timing

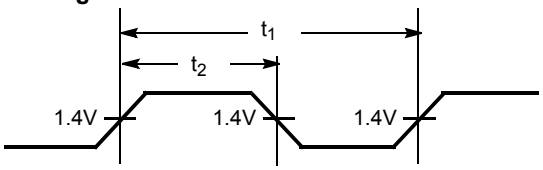

All Outputs Rise/Fall Time

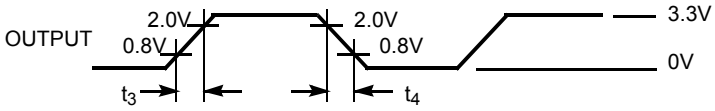

Output-Output Skew

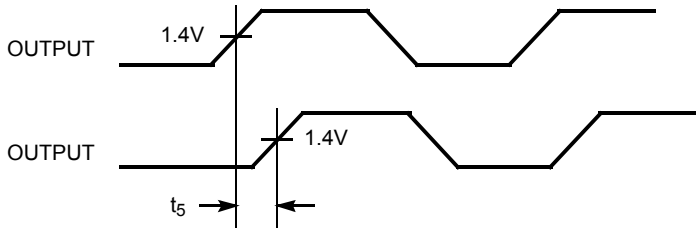

Input-Output Propagation Delay

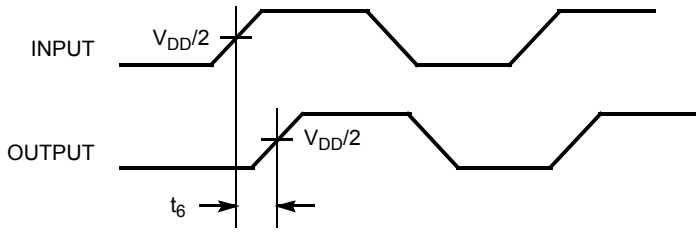

Device-Device Skew

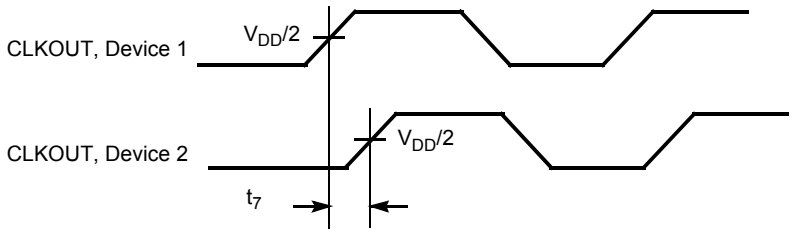

Typical Duty Cycle[8] and I_{DD} Trends[9] for CY2305-1 and CY2309-1

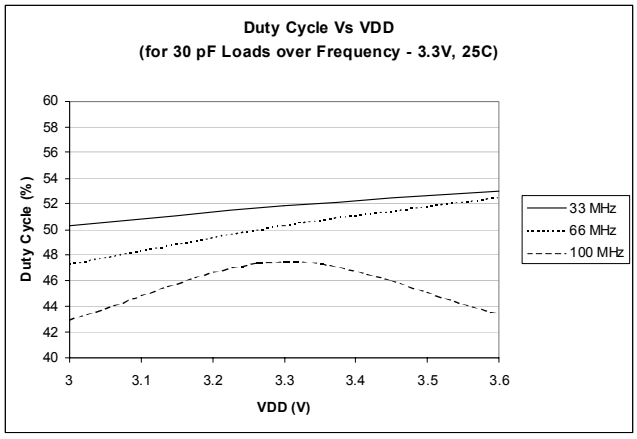

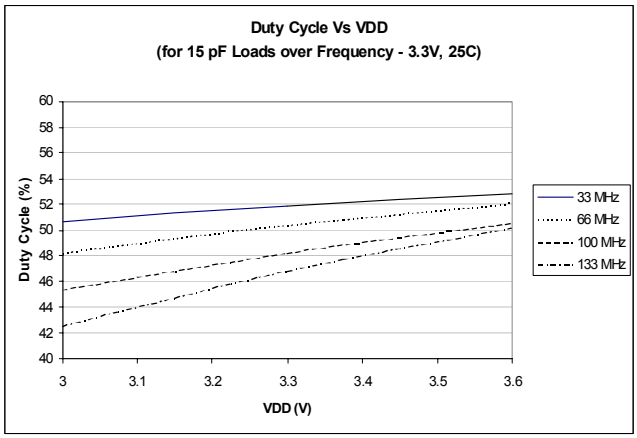

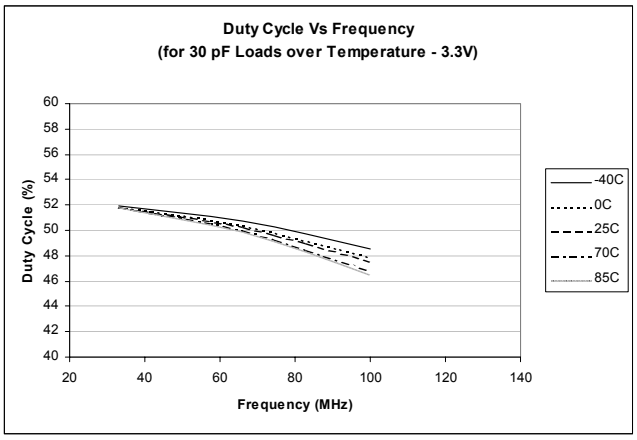

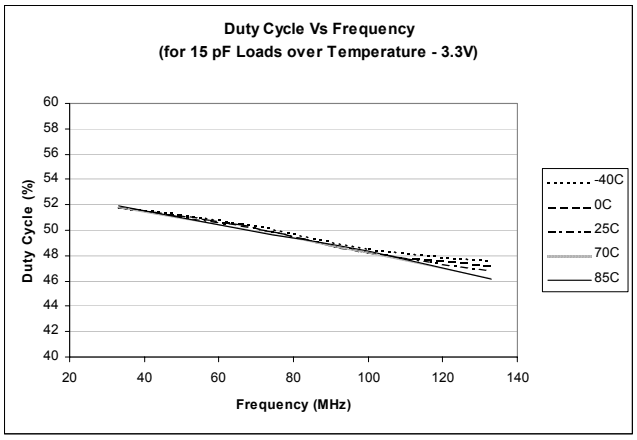

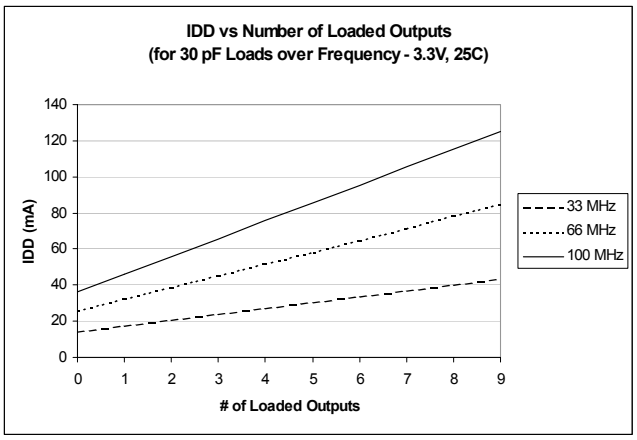

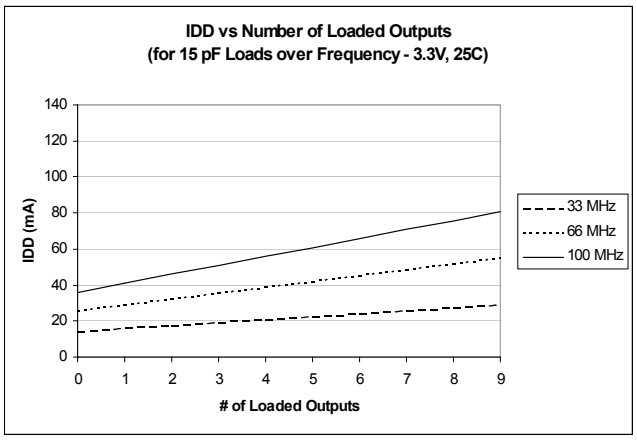

Notes:

8. Duty Cycle is taken from typical chip measured at 1.4V.
9. I_{DD} data is calculated from $I_{DD} = I_{CORE} + nCVf$, where I_{CORE} is the unloaded current. (n = # of outputs; C = Capacitance load per output (F); V = Supply Voltage (V); f = frequency (Hz)).

Typical Duty Cycle[8] and IDD Trends[9] for CY2305-1H and CY2309-1H

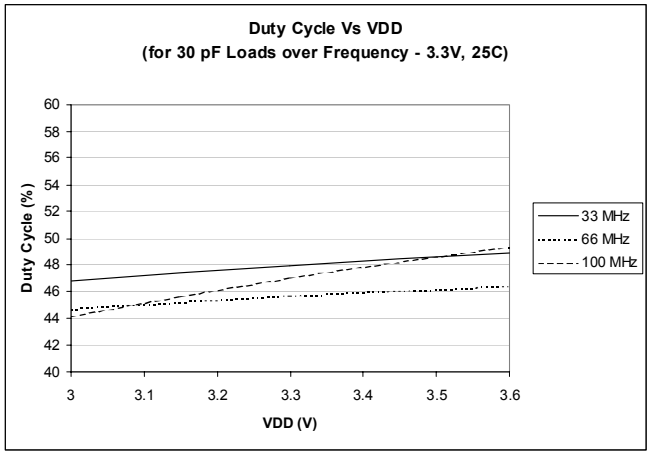

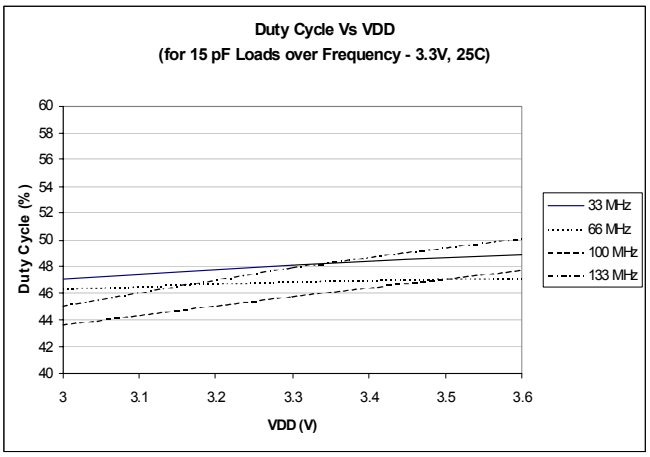

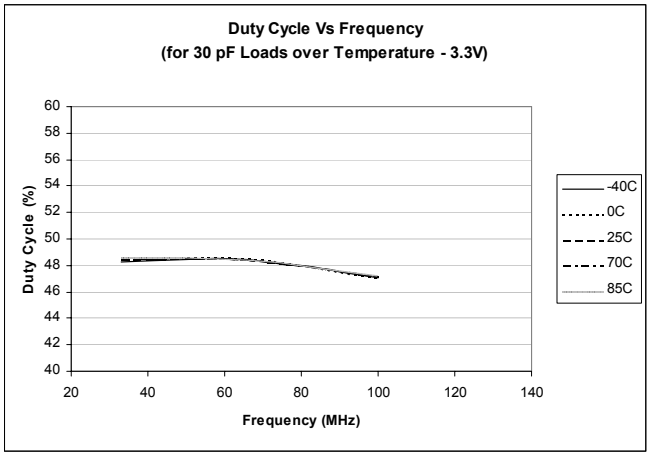

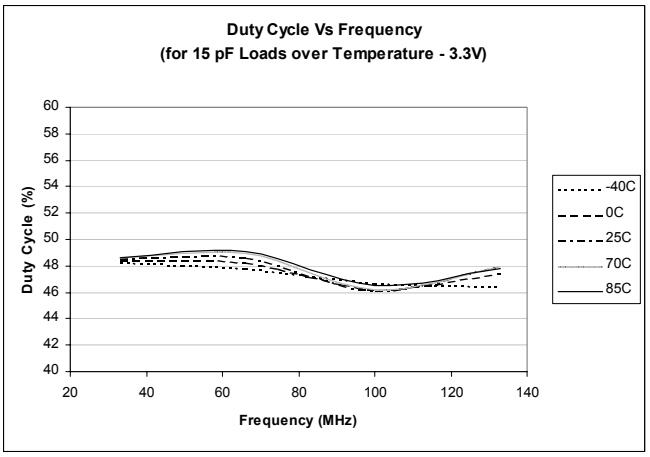

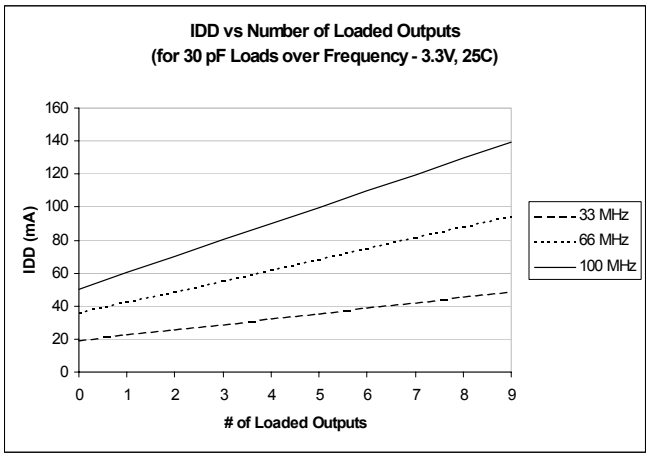

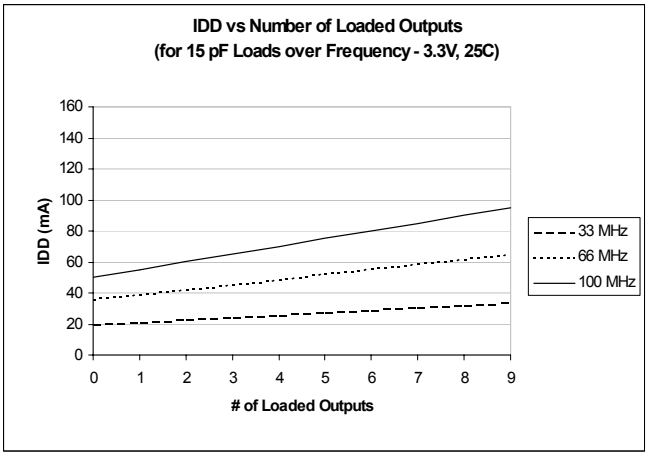

Test Circuits

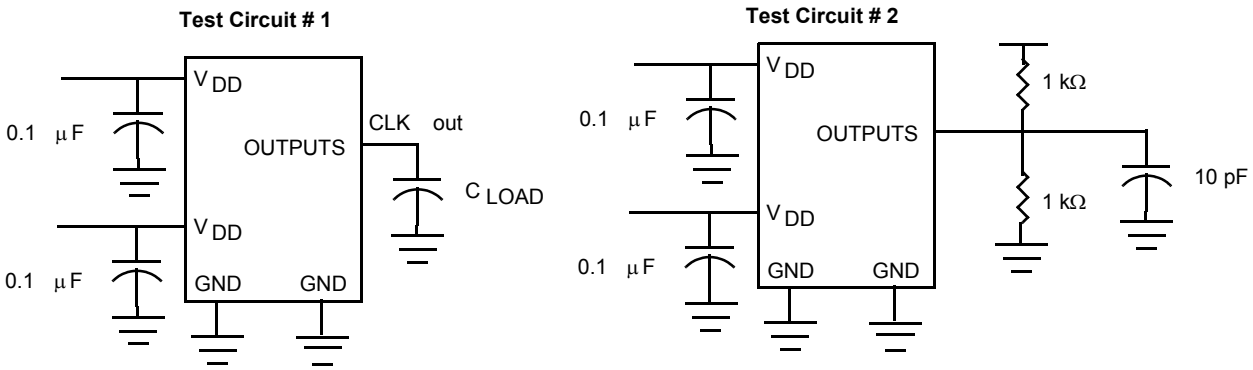

For parameter t_8 (output slew rate) on -1H devices

Ordering Information

Ordering Code	Package Type	Operating Range
CY2305SC-1	8-pin 150-mil SOIC	Commercial
CY2305SC-1T	8-pin 150-mil SOIC – Tape and Reel	Commercial
CY2305SZC-1	8-pin 150-mil SOIC – (Lead-free)	Commercial
CY2305SZC-1T	8-pin 150-mil SOIC – Tape and Reel – (Lead-free)	Commercial
CY2305SXC-1	8-pin 150-mil SOIC – (Lead-free)	Commercial
CY2305SXC-1T	8-pin 150-mil SOIC – Tape and Reel – (Lead-free)	Commercial
CY2305SI-1	8-pin 150-mil SOIC	Industrial
CY2305SI-1T	8-pin 150-mil SOIC – Tape and Reel	Industrial
CY2305SZI-1	8-pin 150-mil SOIC – (Lead-free)	Industrial
CY2305SZI-1T	8-pin 150-mil SOIC – Tape and Reel – (Lead-free)	Industrial
CY2305SXI-1	8-pin 150-mil SOIC – (Lead-free)	Industrial
CY2305SXI-1T	8-pin 150-mil SOIC – Tape and Reel – (Lead-free)	Industrial
CY2305SC-1H	8-pin 150-mil SOIC	Commercial
CY2305SC-1HT	8-pin 150-mil SOIC – Tape and Reel	Commercial
CY2305SZC-1H	8-pin 150-mil SOIC – (Lead-free)	Commercial
CY2305SZC-1HT	8-pin 150-mil SOIC – Tape and Reel – (Lead-free)	Commercial
CY2305SXC-1H	8-pin 150-mil SOIC – (Lead-free)	Commercial
CY2305SXC-1HT	8-pin 150-mil SOIC – Tape and Reel – (Lead-free)	Commercial
CY2305SI-1H	8-pin 150-mil SOIC	Industrial
CY2305SI-1HT	8-pin 150-mil SOIC – Tape and Reel	Industrial
CY2305SZI-1H	8-pin 150-mil SOIC – (Lead-free)	Industrial
CY2305SZI-1HT	8-pin 150-mil SOIC – Tape and Reel – (Lead-free)	Industrial
CY2305SXI-1H	8-pin 150-mil SOIC – (Lead-free)	Industrial
CY2305SXI-1HT	8-pin 150-mil SOIC – Tape and Reel – (Lead-free)	Industrial
CY2309SC-1	16-pin 150-mil SOIC	Commercial
CY2309SC-1T	16-pin 150-mil SOIC – Tape and Reel	Commercial
CY2309SZC-1	16-pin 150-mil SOIC – (Lead-free)	Commercial
CY2309SZC-1T	16-pin 150-mil SOIC – Tape and Reel – (Lead-free)	Commercial
CY2309SXC-1	16-pin 150-mil SOIC – (Lead-free)	Commercial
CY2309SXC-1T	16-pin 150-mil SOIC – Tape and Reel – (Lead-free)	Commercial

Ordering Information (continued)

Ordering Code	Package Type	Operating Range
CY2309SI-1	16-pin 150-mil SOIC	Industrial
CY2309SI-1	16-pin 150-mil SOIC	Industrial
CY2309SI-1T	16-pin 150-mil SOIC – Tape and Reel	Industrial
CY2309SZI-1	16-pin 150-mil SOIC – (Lead-free)	Industrial
CY2309SZI-1T	16-pin 150-mil SOIC – Tape and Reel – (Lead-free)	Industrial
CY2309SXI-1	16-pin 150-mil SOIC – (Lead-free)	Industrial
CY2309SXI-1T	16-pin 150-mil SOIC – Tape and Reel – (Lead-free)	Industrial
CY2309SC-1H	16-pin 150-mil SOIC	Commercial
CY2309SC-1HT	16-pin 150-mil SOIC – Tape and Reel	Commercial
CY2309SZC-1H	16-pin 150-mil SOIC – (Lead-free)	Commercial
CY2309SZC-1HT	16-pin 150-mil SOIC – Tape and Reel – (Lead-free)	Commercial
CY2309SXC-1H	16-pin 150-mil SOIC – (Lead-free)	Commercial
CY2309SXC-1HT	16-pin 150-mil SOIC – Tape and Reel – (Lead-free)	Commercial
CY2309SI-1H	16-pin 150-mil SOIC	Industrial
CY2309SI-1HT	16-pin 150-mil SOIC – Tape and Reel	Industrial
CY2309SZI-1H	16-pin 150-mil SOIC – (Lead-free)	Industrial
CY2309SZI-1HT	16-pin 150-mil SOIC – Tape and Reel – (Lead-free)	Industrial
CY2309SXI-1H	16-pin 150-mil SOIC – (Lead-free)	Industrial
CY2309SXI-1HT	16-pin 150-mil SOIC – Tape and Reel – (Lead-free)	Industrial
CY2309ZC-1H	16-pin 4.4-mm TSSOP	Commercial
CY2309ZC-1HT	16-pin 4.4-mm TSSOP – Tape and Reel	Commercial
CY2309ZXC-1H	16-pin 4.4-mm TSSOP – (Lead-free)	Commercial
CY2309ZXC-1HT	16-pin 4.4-mm TSSOP – Tape and Reel – (Lead-free)	Commercial
CY2309ZZC-1H	16-pin 4.4-mm TSSOP – (Lead-free)	Commercial
CY2309ZZC-1HT	16-pin 4.4-mm TSSOP – Tape and Reel – (Lead-free)	Commercial
CY2309ZI-1H	16-pin 4.4-mm TSSOP	Industrial
CY2309ZI-1HT	16-pin 4.4-mm TSSOP – Tape and Reel	Industrial
CY2309ZXI-1H	16-pin 4.4-mm TSSOP – (Lead-free)	Industrial
CY2309ZXI-1HT	16-pin 4.4-mm TSSOP – Tape and Reel – (Lead-free)	Industrial
CY2309ZZI-1H	16-pin 4.4-mm TSSOP – (Lead-free)	Industrial
CY2309ZZI-1HT	16-pin 4.4-mm TSSOP – Tape and Reel – (Lead-free)	Industrial

Package Drawing and Dimensions

8-lead (150-Mil) SOIC S8

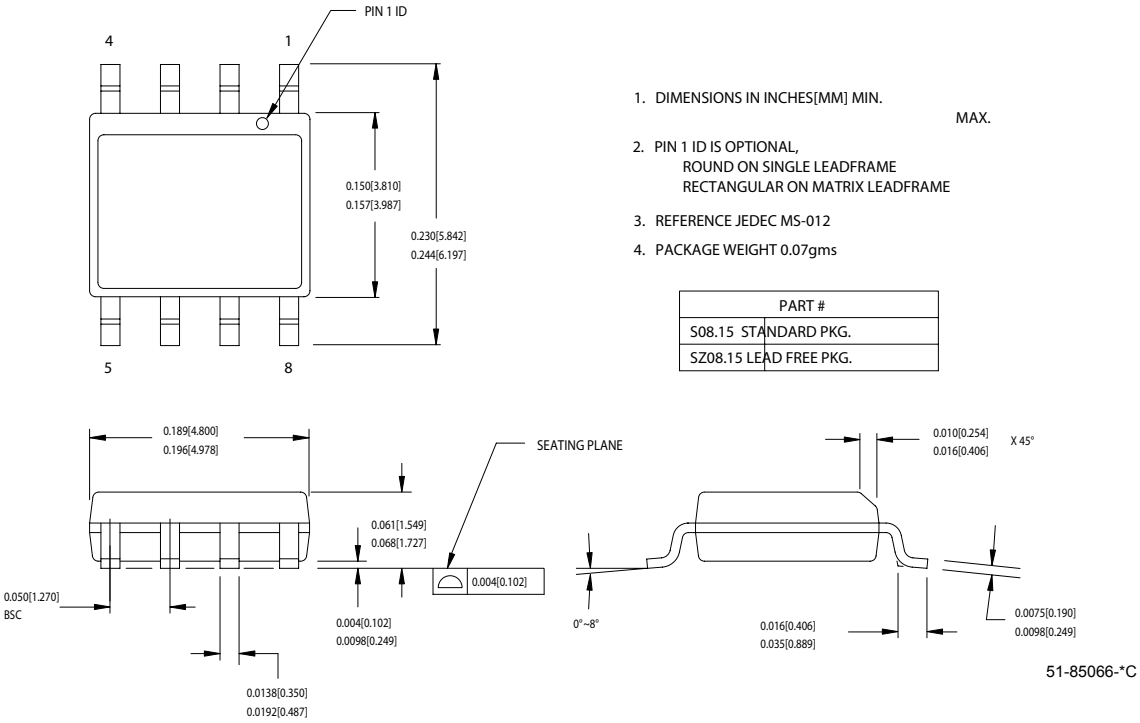

1. DIMENSIONS IN INCHES[MM] MIN. MAX.
2. PIN 1 ID IS OPTIONAL,
   ROUND ON SINGLE LEADFRAME
   RECTANGULAR ON MATRIX LEADFRAME
3. REFERENCE JEDEC MS-012
4. PACKAGE WEIGHT 0.07gms

PART #
S08.15 STANDARD PKG.
SZ08.15 LEAD FREE PKG.

16-Lead (150-Mil) SOIC S16

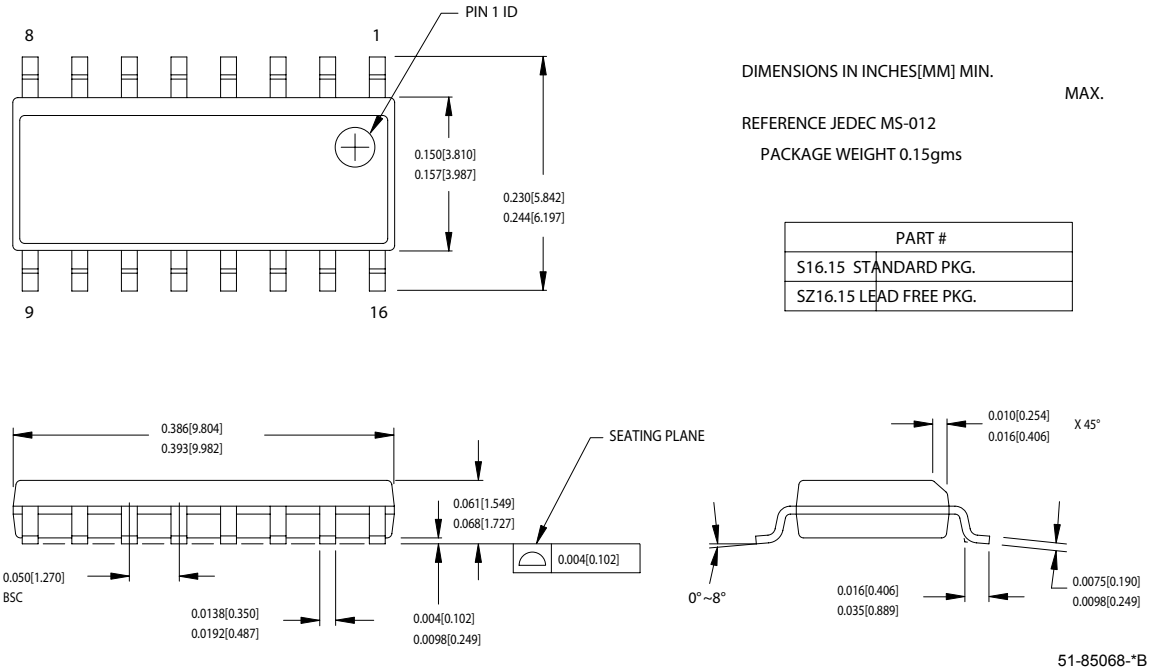

DIMENSIONS IN INCHES[MM] MIN. MAX.

REFERENCE JEDEC MS-012

PACKAGE WEIGHT 0.15gms

PART #
S16.15 STANDARD PKG.
SZ16.15 LEAD FREE PKG.

Package Drawing and Dimensions (continued)

16-lead TSSOP 4.40 MM Body Z16.173

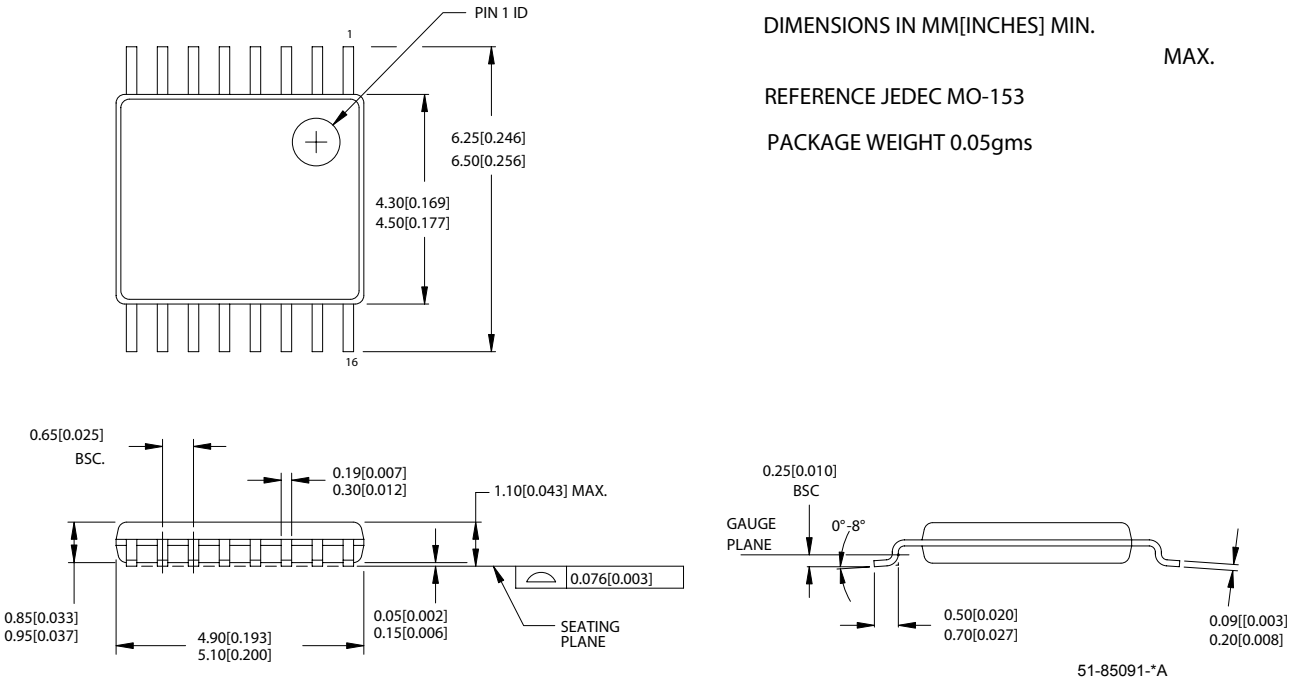

Pentium is a registered trademark of Intel Corporation. All product and company names mentioned in this document may be the trademarks of their respective holders.

© Cypress Semiconductor Corporation, 2005. The information contained herein is subject to change without notice. Cypress Semiconductor Corporation assumes no responsibility for the use

Document History Page

Document Title: CY2305/CY2309 Low-Cost 3.3V Zero Delay Buffer Document Number: 38-07140				
REV.	**ECN NO.**	**Issue Date**	**Orig. of Change**	**Description of Change**
**	110249	10/19/01	SZV	Change from Spec number: 38-00530 to 38-07140
*A	111117	03/01/02	CKN	Added t6B row to the Switching Characteristics Table; also added the letter “A” to the t6A row Corrected the table title from CY2305SC-IH and CY2309SC-IH to CY2305SI-IH and CY2309SI-IH
*B	117625	10/21/02	HWT	Added eight-pin TSSOP packages (CY2305ZC-1 and CY2305ZC-1T) to the ordering information table. Added the Tape and Reel option to all the existing packages: CY2305SC-1T, CY2305SI-1T, CY2305SC-1HT, CY2305SI-1HT, CY2305ZC-1T, CY2309SC-1T, CY2309SI-1T, CY2309SC-1HT, CY2309SI-1HT, CY2309ZC-1HT, CY2309ZI-1HT
*C	121828	12/14/02	RBI	Power-up requirements added to Operating Conditions information
*D	131503	12/12/03	RGL	Added Lead-free for all the devices in the ordering information table
*E	214083	See ECN	RGL	Added a Lead-free with the new coding for all SOIC devices in the ordering information table
*F	291099	See ECN	RGL	Added TSSOP Lead-free devices
*G	390582	See ECN	RGL	Added typical values for jitter

中发网 WWW.ZFA.CN
全球最大的PDF中文下载站
中发网
www.zfa.cn
PDF 资料下载尽在中发网