查询ADSP-2196供应商 捷多邦，专业PCB打样工厂，24小时加急出货

ANALOG DEVICES

DSP Microcomputer

Preliminary Technical Data ADSP-2196

ADSP-219x DSP CORE FEATURES

- 6.25 ns Instruction Cycle Time (Internal), for up to 160 MIPS Sustained Performance
- ADSP-218x Family Code Compatible with the Same Easy -to-Use Algebraic Syntax
- Single-Cycle Instruction Execution
- Up to 16M words of Addressable Memory Space with 24 Bits of Addressing Width
- Dual Purpose Program Memory for Both Instruction and Data Storage
- Fully Transparent Instruction Cache Allows Dual Operand Fetches in Every Instruction Cycle
- Unified Memory Space Permits Flexible Address Generation, Using Two Independent DAG Units
- Independent ALU, Multiplier/Accumulator, and Barrel Shifter Computational Units with Dual 40-bit Accumulators
- Single-Cycle Context Switch between Two Sets of Computational and DAG Registers
- Parallel Execution of Computation and Memory Instructions
- Pipelined Architecture Supports Efficient Code Execution at Speeds up to 160 MIPS
- Register File Computations with All Nonconditional, Nonparallel Computational Instructions
- Powerful Program Sequencer Provides Zero-Overhead Looping and Conditional Instruction Execution
- Architectural Enhancements for Compiled C Code Efficiency

FUNCTIONAL BLOCK DIAGRAM

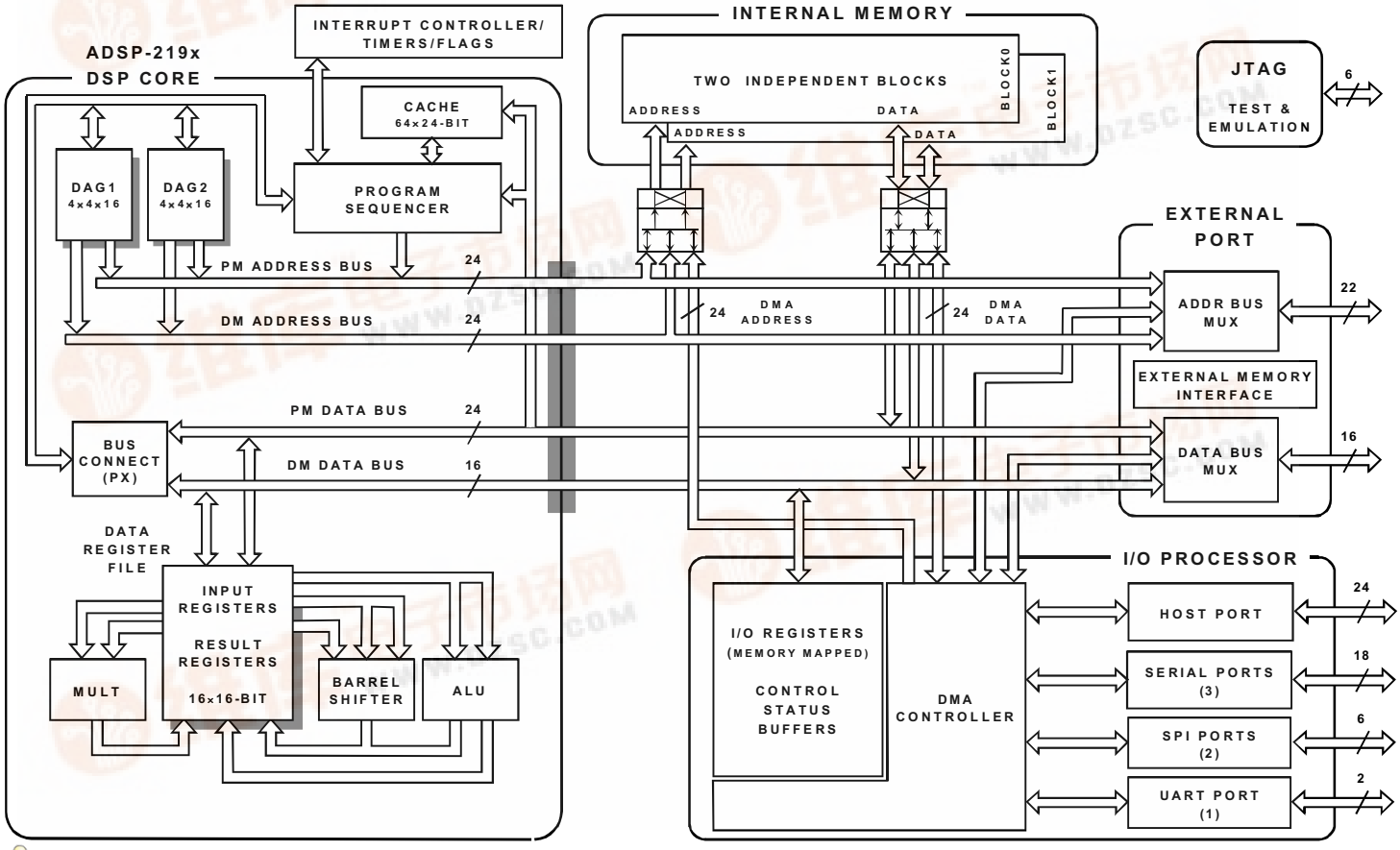

REV. PrA

This information applies to a product under development. Its characteristics and specifications are subject to change without notice. Analog Devices assumes no obligation regarding future manufacturing unless otherwise

One Technology Way, P.O.Box 9106, Norwood, MA 02062-9106, U.S.A.
Tel:781/329-4700 World Wide Web Site: http://www.analog.com
Fax:781/326-8703

©Analog Devices Inc., 2001

ADSP-2196

For current information contact Analog Devices at 800/262-5643

September 2001

ADSP-2196 DSP FEATURES

16K Words of On-Chip RAM, Configured as 8K Words On-Chip 24-bit RAM and 8K Words On-Chip 16-bit RAM

16K Words of On-Chip 24-bit ROM

Architecture Enhancements beyond ADSP-218x Family are Supported with Instruction Set Extensions for Added Registers, Ports, and Peripherals

Flexible Power Management with Selectable Power-Down and Idle Modes

Programmable PLL Supports 1× to 32× Frequency Multiplication, Enabling Full-Speed Operation from Low-Speed Input Clocks

2.5 V Internal Operation Supports 3.3 V Compliant I/O

Three Full-Duplex Multichannel Serial Ports, Each Supporting H.100 Standard with A-Law and μ-Law Companding in Hardware

Two SPI-Compatible Ports with DMA Capability

One UART Port with DMA Capability

16 General-Purpose I/O Pins (Eight Dedicated/Eight Programmable from the External Memory Interface) with Integrated Interrupt Support

Three Programmable 32-Bit Interval Timers with Pulsewidth Counter, PWM Generation, and Externally Clocked Timer Capabilities

Up to 11 DMA Channels can be Active at any Given Time

Host Port With DMA Capability for Efficient, Glueless Host Interface (16-Bit Transfers)

External Memory Interface Features Include:

- **Direct Access from the DSP to External Memory for Data and Instructions.**
- **Support for DMA Block Transfers to/from External Memory.**
- **Separate Peripheral Memory Space with Parallel Support for 224K External 16-Bit Registers.**
- **Four General-Purpose Memory Select Signals that Provide Access to Separate Banks of External Memory. Bank Boundaries and Size Are User-Programmable.**
- **Programmable Waitstate Logic with ACK Signal and Separate Read and Write Wait Counts. Wait Mode Completion Supports All Combinations of ACK and/or Wait Count.**
- **I/O Clock Rate Can Be Set to the Peripheral Clock Rate Divided by 1, 2, 4, 16, or 32 to Allow Interface to Slow Memory Devices.**
- **Address Translation and Data Word Packing is Provided to Support an 8- or 16-Bit External Data Bus.**
- **Programmable Read and Write Strobe Polarity.**
- **Separate Configuration Registers for the Four General-Purpose, Peripheral, and Boot Memory Spaces.**
- **Bus Request and Grant Signals Support the Use of the External Bus by an External Device.**

Boot Methods Include Booting Through External Memory Interface, SPI Ports, UART Port, or Host Interface

IEEE JTAG Standard 1149.1 Test Access Port Supports On-Chip Emulation and System Debugging

144-Lead LQFP Package (20 × 20 × 1.4 mm) and 144-Lead Mini-BGA Package (10 × 10 × 1.25 mm)

This information applies to a product under development. Its characteristics and specifications are subject to change without notice. Analog Devices assumes no obligation regarding future manufacturing unless otherwise agreed to in writing.

TABLE OF CONTENTS

ADSP-219x dSP Core Features 1
Functional Block Diagram 1
ADSP-2196 DSP Features 2
General Note 4
General Description 4
DSP Core Architecture 4
DSP Peripherals Architecture 5
Memory Architecture 6
Internal (On-Chip) Memory 6
Internal On-Chip ROM 6
On-Chip Memory Security 7
External (Off-Chip) Memory 7
External Memory Space 7
I/O Memory Space 7
Boot Memory Space 7
Interrupts 8
DMA Controller 10
Host Port 10
Host Port Acknowledge (HACK) Modes 10
Host Port Chip Selects 11
DSP Serial Ports (SPORTs) 11
Serial Peripheral Interface (SPI) Ports 12
UART Port 12
Programmable Flag (PFx) Pins 13
Low Power Operation 13
Idle Mode 13
Power-down Core Mode 13
Power-Down Core/Peripherals Mode 13
Power-Down All Mode 14
Clock Signals 14
Reset 14
Power Supplies 15
Booting Modes 15
Bus Request and Bus Grant 16
Instruction Set Description 16
Development Tools 16
Designing an Emulator-Compatible DSP Board (Target) 17
Target Board Header 17
JTAG Emulator Pod Connector 18
Design-for-Emulation Circuit Information 18
Additional Information 18
Pin Descriptions 18
Specifications 22
Recommended Operating Conditions 22
Electrical Characteristics 22
ABSOLUTE MAXIMUM RATINGS 24
ESD SENSITIVITY 24
Timing Specifications 24
Clock In and Clock Out Cycle Timing 25
Programmable Flags Cycle Timing 26
Timer PWM_OUT Cycle Timing 27
External Port Write Cycle Timing 28
External Port Read Cycle Timing 30
External Port Bus Request and Grant Cycle Timing 32
Host Port ALE Mode Write Cycle Timing 34
Host Port ACC Mode Write Cycle Timing 36
Host Port ALE Mode Read Cycle Timing 38
Host Port ACC Mode Read Cycle Timing 40
Serial Port (SPORT) Clocks and Data Timing . 42
Serial Port (SPORT) Frame Synch Timing 44
Serial Peripheral Interface (SPI) Port—Master Timing 46
Serial Peripheral Interface (SPI) Port—Slave Timing 48
Universal Asynchronous Receiver-Transmitter (UART) Port—Receive and Transmit Timing 50
JTAG Test And Emulation Port Timing 51
Output Drive Currents 52
Power Dissipation 52
Test Conditions 54
Output Disable Time 54
Output Enable Time 54
Example System Hold Time Calculation 55
Capacitive Loading 55
Environmental Conditions 55
Thermal Characteristics 55
ADSP-2196 144-Lead LQFP Pinout 58
ADSP-2196 144-Lead Mini-BGA Pinout 62
144-Lead Metric Thin Plastic Quad Flatpack (LQFP) (ST-144) 67
144-Ball Mini-BGA (CA-144) 67

This information applies to a product under development. Its characteristics and specifications are subject to change without notice. Analog Devices assumes no obligation regarding future manufacturing unless otherwise agreed to in writing.

General Note

This data sheet provides preliminary information for the ADSP-2196 Digital Signal Processor.

GENERAL DESCRIPTION

The ADSP-2196 DSP is a single-chip microcomputer optimized for digital signal processing (DSP) and other high speed numeric processing applications.

The ADSP-2196 combines the ADSP-219x family base architecture (three computational units, two data address generators, and a program sequencer) with three serial ports, two SPI-compatible ports, one UART port, a DMA controller, three programmable timers, general-purpose Programmable Flag pins, extensive interrupt capabilities, and on-chip program and data memory spaces.

The ADSP-2196 architecture is code-compatible with ADSP-218x family DSPs. Although the architectures are compatible, the ADSP-2196 architecture has a number of enhancements over the ADSP-218x architecture. The enhancements to computational units, data address generators, and program sequencer make the ADSP-2196 more flexible and even easier to program than the ADSP-218x DSPs.

Indirect addressing options provide addressing flexibility—premodify with no update, pre- and post-modify by an immediate 8-bit, two's-complement value and base address registers for easier implementation of circular buffering.

The ADSP-2196 integrates 32K words of on-chip memory configured as 8K words (24-bit) of program RAM, 8K words (16-bit) of data RAM, and 16K words (24-bit) of program ROM. Power-down circuitry is also provided to meet the low power needs of battery-operated portable equipment. The ADSP-2196 is available in 144-lead LQFP and mini-BGA packages.

Fabricated in a high-speed, low-power, CMOS process, the ADSP-2196 operates with a 6.25 ns instruction cycle time (160 MIPS). All instructions, except two multiword instructions, can execute in a single DSP cycle.

The ADSP-2196's flexible architecture and comprehensive instruction set support multiple operations in parallel. For example, in one processor cycle, the ADSP-2196 can:

- Generate an address for the next instruction fetch
- Fetch the next instruction
- Perform one or two data moves
- Update one or two data address pointers
- Perform a computational operation

These operations take place while the processor continues to:

- Receive and transmit data through two serial ports
- Receive and/or transmit data from a Host
- Receive or transmit data through the UART
- Receive or transmit data over two SPI ports
- Access external memory through the external memory interface
- Decrement the timers

DSP Core Architecture

The ADSP-2196 instruction set provides flexible data moves and multifunction (one or two data moves with a computation) instructions. Every single-word instruction can be executed in a single processor cycle. The ADSP-2196 assembly language uses an algebraic syntax for ease of coding and readability. A comprehensive set of development tools supports program development.

The functional block diagram on page 1 shows the architecture of the ADSP-219x core. It contains three independent computational units: the ALU, the multiplier/accumulator (MAC), and the shifter. The computational units process 16-bit data from the register file and have provisions to support multiprecision computations. The ALU performs a standard set of arithmetic and logic operations; division primitives are also supported. The MAC performs single-cycle multiply, multiply/add, and multiply/subtract operations. The MAC has two 40-bit accumulators, which help with overflow. The shifter performs logical and arithmetic shifts, normalization, denormalization, and derive exponent operations. The shifter can be used to efficiently implement numeric format control, including multiword and block floating-point representations.

Register-usage rules influence placement of input and results within the computational units. For most operations, the computational units' data registers act as a data register file, permitting any input or result register to provide input to any unit for a computation. For feedback operations, the computational units let the output (result) of any unit be input to any unit on the next cycle. For conditional or multifunction instructions, there are restrictions on which data registers may provide inputs or receive results from each computational unit. For more information, see the *ADSP-219x DSP Instruction Set Reference*.

A powerful program sequencer controls the flow of instruction execution. The sequencer supports conditional jumps, subroutine calls, and low interrupt overhead. With internal loop counters and loop stacks, the ADSP-2196 executes looped code with zero overhead; no explicit jump instructions are required to maintain loops.

Two data address generators (DAGs) provide addresses for simultaneous dual operand fetches (from data memory and program memory). Each DAG maintains and updates four 16-bit address pointers. Whenever the pointer is used to access data (indirect addressing), it is pre- or post-modified by the value of one of four possible modify registers. A length value and base address may be associated with each pointer to implement automatic modulo addressing for circular buffers. Page registers in the DAGs allow circular addressing

This information applies to a product under development. Its characteristics and specifications are subject to change without notice. Analog Devices assumes no obligation regarding future manufacturing unless otherwise agreed to in writing.

within 64K word boundaries of each of the 256 memory pages, but these buffers may not cross page boundaries. Secondary registers duplicate all the primary registers in the DAGs; switching between primary and secondary registers provides a fast context switch.

Efficient data transfer in the core is achieved with the use of internal buses:

- Program Memory Address (PMA) Bus
- Program Memory Data (PMD) Bus
- Data Memory Address (DMA) Bus
- Data Memory Data (DMD) Bus
- DMA Address Bus
- DMA Data Bus

The two address buses (PMA and DMA) share a single external address bus, allowing memory to be expanded off-chip, and the two data buses (PMD and DMD) share a single external data bus. Boot memory space and I/O memory space also share the external buses.

Program memory can store both instructions and data, permitting the ADSP-2196 to fetch two operands in a single cycle, one from program memory and one from data memory. The DSP's dual memory buses also let the ADSP-219x core fetch an operand from data memory and the next instruction from program memory in a single cycle.

DSP Peripherals Architecture

The functional block diagram on page 1 shows the DSP's on-chip peripherals, which include the external memory interface, Host port, serial ports, SPI-compatible ports, UART port, JTAG test and emulation port, timers, flags, and interrupt controller. These on-chip peripherals can connect to off-chip devices as shown in Figure 1.

The ADSP-2196 has a 16-bit Host port with DMA capability that lets external Hosts access on-chip memory. This 24-pin parallel port consists of a 16-pin multiplexed data/address bus and provides a low-service overhead data move capability. Configurable for 8- or 16-bits, this port provides a glueless interface to a wide variety of 8- and 16-bit microcontrollers. Two chip-selects provide Hosts access to the DSP's entire memory map. The DSP is bootable through this port.

The ADSP-2196 also has an external memory interface that is shared by the DSP's core, the DMA controller, and DMA capable peripherals, which include the UART, SPORT0, SPORT1, SPORT2, SPI0, SPI1, and the Host port. The external port consists of a 16-bit data bus, a 22-bit address bus, and control signals. The data bus is configurable to provide an 8 or 16 bit interface to external memory. Support for word packing lets the DSP access 16- or 24-bit words from external memory regardless of the external data bus width. When configured for an 8-bit interface, the unused

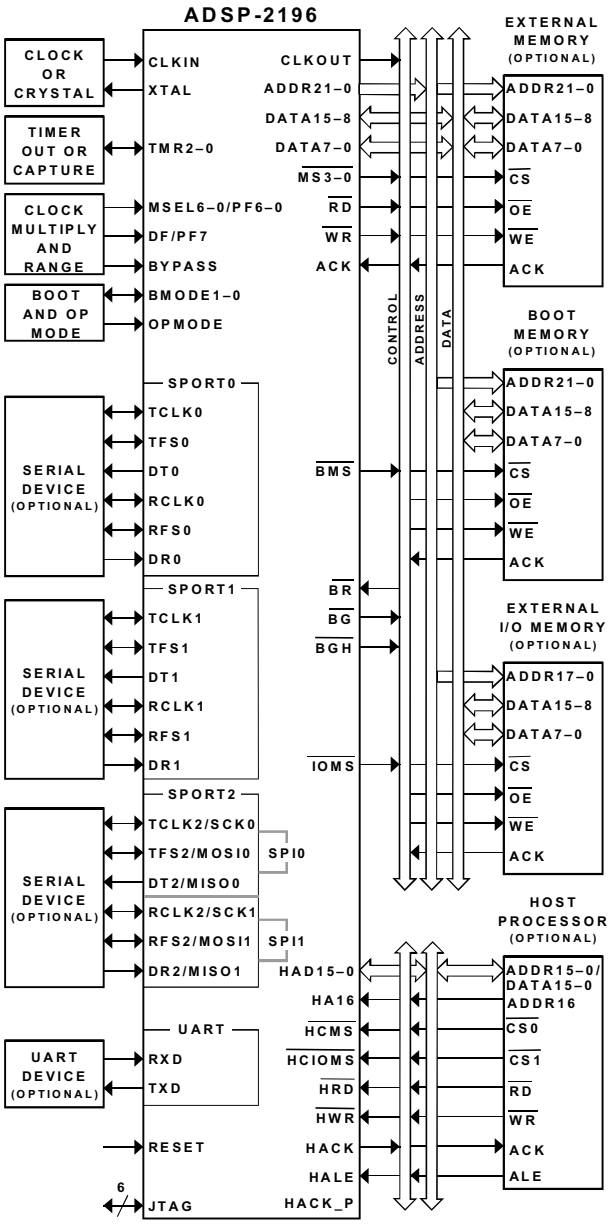

Figure 1. ADSP-2196 System Diagram

eight lines provide eight programmable, bidirectional general-purpose Programmable Flag lines, six of which can be mapped to software condition signals.

The memory DMA controller lets the ADSP-2196 move data and instructions from between memory spaces: internal-to-external, internal-to-internal, and external-to-external. On-chip peripherals can also use this controller for DMA transfers.

The ADSP-2196 can respond to up to seventeen interrupts at any given time: three internal (stack, emulator kernel, and power-down), two external (emulator and reset), and twelve user-defined (peripherals) interrupts. Programmers assign

This information applies to a product under development. Its characteristics and specifications are subject to change without notice. Analog Devices assumes no obligation regarding future manufacturing unless otherwise agreed to in writing.

a peripheral to one of the 12 user-defined interrupts. These assignments determine the priority of each peripheral for interrupt service.

There are three serial ports on the ADSP-2196 that provide a complete synchronous, full-duplex serial interface. This interface includes optional companding in hardware and a wide variety of framed or frameless data transmit and receive modes of operation. Each serial port can transmit or receive an internal or external, programmable serial clock and frame syncs. Each serial port supports 128-channel Time Division Multiplexing.

The ADSP-2196 provides up to sixteen general-purpose I/O pins, which are programmable as either inputs or outputs. Eight of these pins are dedicated general purpose Programmable Flag pins. The other eight of them are multifunctional pins, acting as general purpose I/O pins when the DSP connects to an 8-bit external data bus and acting as the upper eight data pins when the DSP connects to a 16-bit external data bus. These Programmable Flag pins can implement edge- or level-sensitive interrupts, some of which can be used to base the execution of conditional instructions.

Three programmable interval timers generate periodic interrupts. Each timer can be independently set to operate in one of three modes:

- Pulse Waveform Generation mode
- Pulsewidth Count/Capture mode
- External Event Watchdog mode

Each timer has one bi-directional pin and four registers that implement its mode of operation: A 7-bit configuration register, a 32-bit count register, a 32-bit period register, and a 32-bit pulsewidth register. A single status register supports all three timers. A bit in the mode status register globally enables or disables all three timers, and a bit in each timer's configuration register enables or disables the corresponding timer independently of the others.

Memory Architecture

The ADSP-2196 DSP provides 16K words of on-chip SRAM memory. This memory is divided into two 8K blocks located on memory Page 0 in the DSP's memory map. The DSP also provides 16K words of on-chip ROM. In addition to the internal and external memory space, the ADSP-2196 can address two additional and separate off-chip memory spaces: I/O space and boot space.

As shown in Figure 2, the DSP's two internal memory blocks populate all of Page 0. The entire DSP memory map consists of 256 pages (Pages 0–255), and each page is 64K words long. External memory space consists of four memory banks (banks 0–3) and supports a wide variety of SRAM memory devices. Each bank is selectable using the memory select pins ($\overline{MS3–0}$) and has configurable page boundaries, waitstates, and waitstate modes. The 1K word of on-chip boot-ROM populates the top of Page 255 while the remaining 254 pages are addressable off-chip. I/O memory pages differ from external memory pages in that I/O pages are 1K word long, and the external I/O pages have their own select pin ($\overline{IOMS}$). Pages 0–31 of I/O memory space reside on-chip and contain the configuration registers for the peripherals. Both the ADSP-2196 and DMA-capable peripherals can access the DSP's entire memory map.

Internal (On-Chip) Memory

The ADSP-2196's unified program and data memory space consists of 16M locations that are accessible through two 24-bit address buses, the PMA and DMA buses. The DSP uses slightly different mechanisms to generate a 24-bit address for each bus. The DSP has three functions that support access to the full memory map.

- The DAGs generate 24-bit addresses for data fetches from the entire DSP memory address range. Because DAG index (address) registers are 16 bits wide and hold the lower 16 bits of the address, each of the DAGs has its own 8-bit page register (DMPGx) to hold the most significant eight address bits. Before a DAG generates an address, the program must set the DAG's DMPGx register to the appropriate memory page.
- The Program Sequencer generates the addresses for instruction fetches. For relative addressing instructions, the program sequencer bases addresses for relative jumps, calls, and loops on the 24-bit Program Counter (PC). In direct addressing instructions (two-word instructions), the instruction provides an immediate 24-bit address value. The PC allows linear addressing of the full 24-bit address range.
- For indirect jumps and calls that use a 16-bit DAG address register for part of the branch address, the Program Sequencer relies on an 8-bit Indirect Jump page (IJPG) register to supply the most significant eight address bits. Before a cross page jump or call, the program must set the program sequencer's IJPG register to the appropriate memory page.

The ADSP-2196 has 1K word of on-chip ROM that holds boot routines. If peripheral booting is selected, the DSP starts executing instructions from the on-chip boot ROM, which starts the boot process from the selected peripheral. For more information, see Booting Modes on page 15. The on-chip boot ROM is located on Page 255 in the DSP's memory space map.

Internal On-Chip ROM

The ADSP-2196 DSP features a 16K-word × 24-bit on-chip maskable ROM mapped into program memory space (Figure 3).

Customers can arrange to have the ROM programmed with application-specific code.

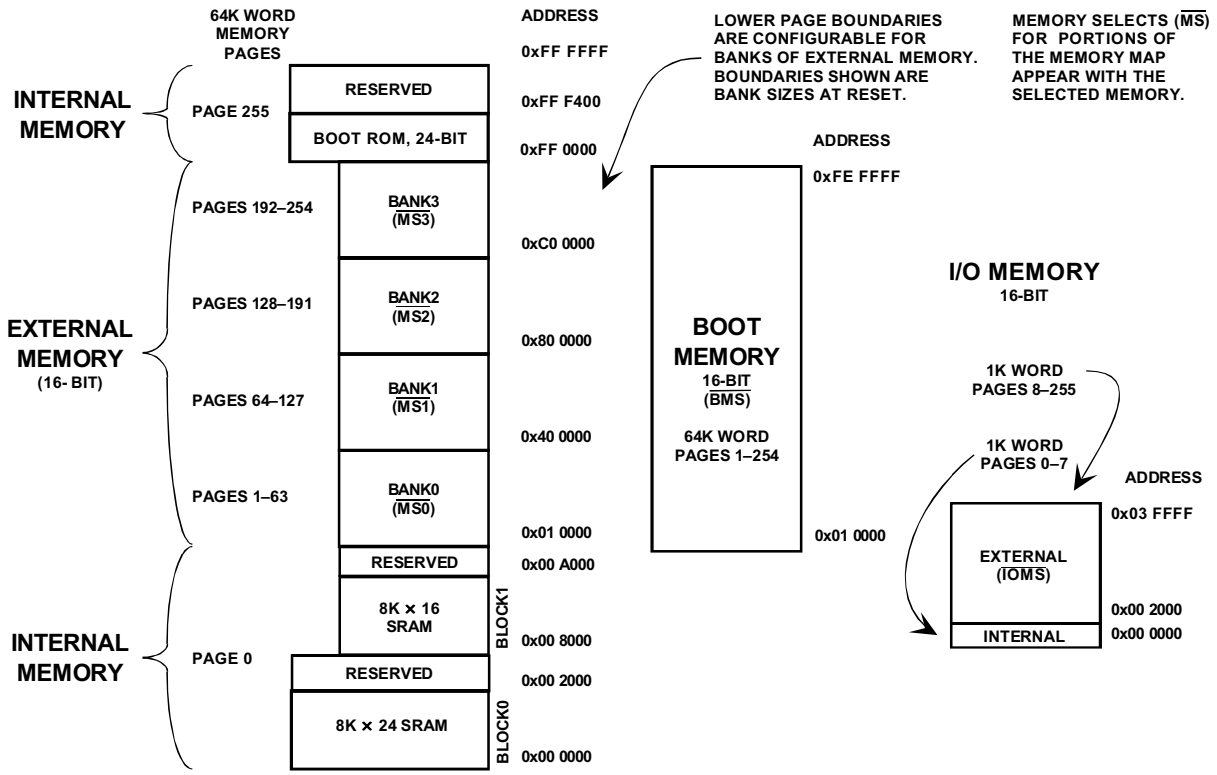

Figure 2. ADSP-2196 Memory Map

On-Chip Memory Security

The ADSP-2196 has a maskable option to protect the contents of on-chip memories from being accessed. When the ROM protection is set, the on-chip ROM space cannot be accessed by a hardware emulator.

External (Off-Chip) Memory

Each of the ADSP-2196's off-chip memory spaces has a separate control register, so applications can configure unique access parameters for each space. The access parameters include read and write wait counts, waitstate completion mode, I/O clock divide ratio, write hold time extension, strobe polarity, and data bus width. The core clock and peripheral clock ratios influence the external memory access strobe widths. For more information, see Clock Signals on page 14. The off-chip memory spaces are:

- External memory space ($\overline{MS3–0}$ pins)
- I/O memory space ($\overline{IOMS}$ pin)
- Boot memory space ($\overline{BMS}$ pin)

All of these off-chip memory spaces are accessible through the External Port, which can be configured for 8-bit or 16-bit data widths.

External Memory Space

External memory space consists of four memory banks. These banks can contain a configurable number of 64K word pages. At reset, the page boundaries for external memory have Bank0 containing pages 1–63, Bank1 containing pages 64–127, Bank2 containing pages 128–191, and Bank3 containing Pages 192–254. The $\overline{MS3–0}$ memory bank pins select Banks 3–0, respectively. The external memory interface decodes the 8 MSBs of the DSP program address to select one of the four banks. Both the ADSP-219x core and DMA-capable peripherals can access the DSP's external memory space.

I/O Memory Space

The ADSP-2196 supports an additional external memory called I/O memory space. This space is designed to support simple connections to peripherals (such as data converters and external registers) or to bus interface ASIC data registers. I/O space supports a total of 256K locations. The first 8K addresses are reserved for on-chip peripherals. The upper 248K addresses are available for external peripheral devices. The DSP's instruction set provides instructions for accessing I/O space. These instructions use an 18-bit address that is assembled from an 8-bit I/O page (IOPG) register and a 10-bit immediate value supplied in the instruction. Both the ADSP-219x core and a Host (through the Host Port Interface) can access I/O memory space.

Boot Memory Space

Boot memory space consists of one off-chip bank with 254 pages. The $\overline{BMS}$ memory bank pin selects boot memory space. Both the ADSP-219x core and DMA-capable

This information applies to a product under development. Its characteristics and specifications are subject to change without notice. Analog Devices assumes no obligation regarding future manufacturing unless otherwise agreed to in writing.

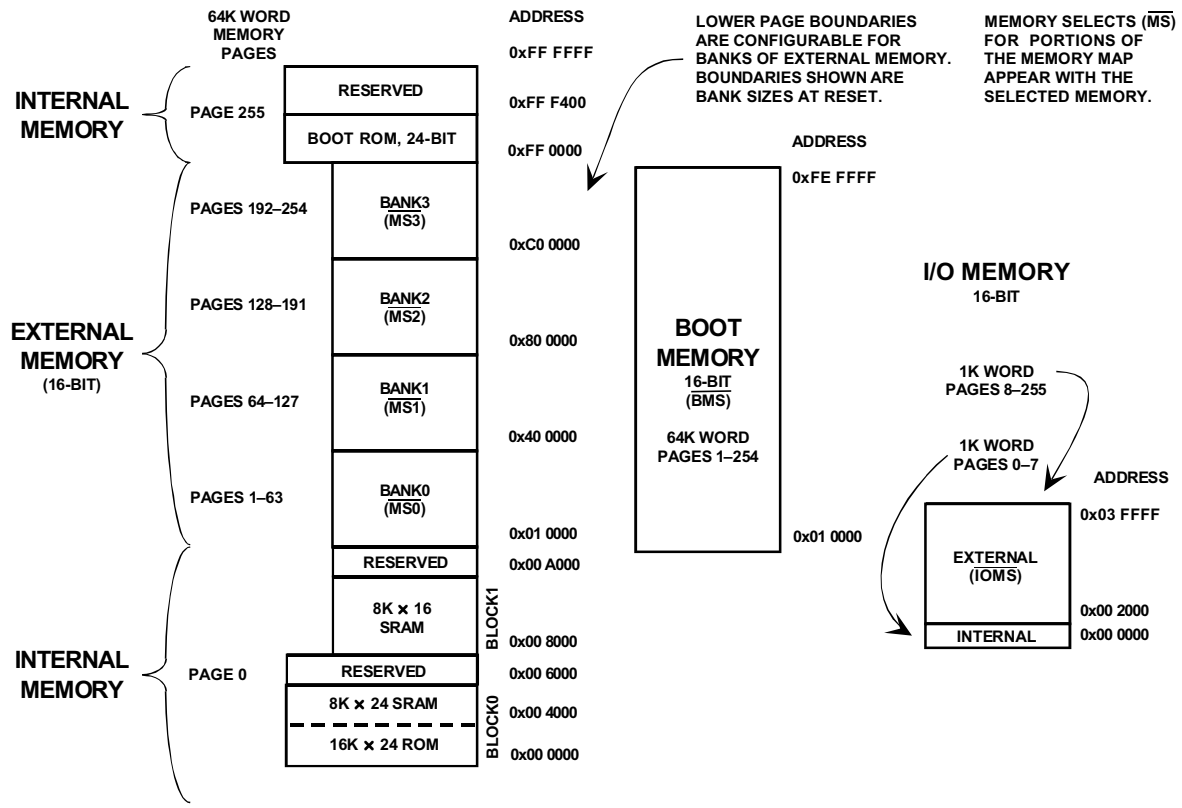

Figure 3. ADSP-2196 Memory Map, with On-Chip ROM

peripherals can access the DSP's off-chip boot memory space. After reset, the DSP always starts executing instructions from the on-chip boot ROM. Depending on the boot configuration, the boot ROM code can start booting the DSP from boot memory. For more information, see Booting Modes on page 15.

Interrupts

The interrupt controller lets the DSP respond to 17 interrupts with minimum overhead. The controller implements an interrupt priority scheme as shown in Table 1. Applications can use the unassigned slots for software and peripheral interrupts.

Table 1. Interrupt Priorities/Addresses

Interrupt	IMASK/ IRPTL	Vector Address[1]
Emulator (NMI)— Highest Priority	NA	NA
Reset (NMI)	0	0x00 0000
Power-Down (NMI)	1	0x00 0020
Loop and PC Stack	2	0x00 0040

Table 1. Interrupt Priorities/Addresses (Continued)

Interrupt	IMASK/ IRPTL	Vector Address[1]
Emulation Kernel	3	0x00 0060
User Assigned Interrupt	4	0x00 0080
User Assigned Interrupt	5	0x00 00A0
User Assigned Interrupt	6	0x00 00C0
User Assigned Interrupt	7	0x00 00E0
User Assigned Interrupt	8	0x00 0100
User Assigned Interrupt	9	0x00 0120
User Assigned Interrupt	10	0x00 0140
User Assigned Interrupt	11	0x00 0160
User Assigned Interrupt	12	0x00 0180

Table 1. Interrupt Priorities/Addresses (Continued)

Interrupt	IMASK/ IRPTL	Vector Address[1]
User Assigned Interrupt	13	0x00 01A0
User Assigned Interrupt	14	0x00 01C0
User Assigned Interrupt—Lowest Priority	15	0x00 01E0

[1]These interrupt vectors start at address 0x10000 when the DSP is in "no-boot", run-form-external memory mode.

Table 2 shows the ID and priority at reset of each of the peripheral interrupts. To assign the peripheral interrupts a different priority, applications write the new priority to their corresponding control bits (determined by their ID) in the Interrupt Priority Control register. The peripheral interrupt's position in the IMASK and IRPTL register and its vector address depend on its priority level, as shown in Table 1. Because the IMASK and IRPTL registers are limited to 16 bits, any peripheral interrupts assigned a priority level of 11 are aliased to the lowest priority bit position (15) in these registers and share vector address 0x00 01E0.

Table 2. Peripheral Interrupts and Priority at Reset

Interrupt	ID	Reset Priority
Slave DMA/Host Port Interface	0	0
SPORT0 Receive	1	1
SPORT0 Transmit	2	2
SPORT1 Receive	3	3
SPORT1 Transmit	4	4
SPORT2 Receive/SPI0	5	5
SPORT2 Transmit/SPI1	6	6
UART Receive	7	7
UART Transmit	8	8
Timer A	9	9
Timer B	10	10
Timer C	11	11

Table 2. Peripheral Interrupts and Priority at Reset

Interrupt	ID	Reset Priority
Programmable Flag 0 (any PFx)	12	11
Programmable Flag 1 (any PFx)	13	11
Memory DMA port	14	11

Interrupt routines can either be nested with higher priority interrupts taking precedence or processed sequentially. Interrupts can be masked or unmasked with the IMASK register. Individual interrupt requests are logically ANDed with the bits in IMASK; the highest priority unmasked interrupt is then selected. The emulation, power-down, and reset interrupts are nonmaskable with the IMASK register, but software can use the DIS INT instruction to mask the power-down interrupt.

The Interrupt Control (ICNTL) register controls interrupt nesting and enables or disables interrupts globally. The general-purpose Programmable Flag (PFx) pins can be configured as outputs, can implement software interrupts, and (as inputs) can implement hardware interrupts. Programmable Flag pin interrupts can be configured for level-sensitive, single edge-sensitive, or dual edge-sensitive operation.

Table 3. Interrupt Control (ICNTL) Register Bits

Bit	Description
0–3	Reserved
4	Interrupt Nesting Enable
5	Global Interrupt Enable
6	Reserved
7	MAC-Biased Rounding Enable
8–9	Reserved
10	PC Stack Interrupt Enable
11	Loop Stack Interrupt Enable
12–15	Reserved

The IRPTL register is used to force and clear interrupts. On-chip stacks preserve the processor status and are automatically maintained during interrupt handling. To support interrupt, loop, and subroutine nesting, the PC stack is 33 levels deep, the loop stack is eight levels deep, and the status stack is 16 levels deep. To prevent stack overflow, the

This information applies to a product under development. Its characteristics and specifications are subject to change without notice. Analog Devices assumes no obligation regarding future manufacturing unless otherwise agreed to in writing.

PC stack can generate a stack-level interrupt if the PC stack falls below three locations full or rises above 28 locations full.

The following instructions globally enable or disable interrupt servicing, regardless of the state of IMASK.

```
ENA INT;
DIS INT;
```

At reset, interrupt servicing is disabled.

For quick servicing of interrupts, a secondary set of DAG and computational registers exist. Switching between the primary and secondary registers lets programs quickly service interrupts, while preserving the DSP's state.

DMA Controller

The ADSP-2196 has a DMA controller that supports automated data transfers with minimal overhead for the DSP core. Cycle stealing DMA transfers can occur between the ADSP-2196's internal memory and any of its DMA-capable peripherals. Additionally, DMA transfers can be accomplished between any of the DMA-capable peripherals and external devices connected to the external memory interface. DMA-capable peripherals include the Host port, SPORTs, SPI ports, and UART. Each individual DMA-capable peripheral has a dedicated DMA channel. To describe each DMA sequence, the DMA controller uses a set of parameters—called a DMA descriptor. When successive DMA sequences are needed, these DMA descriptors can be linked or chained together, so the completion of one DMA sequence auto-initiates and starts the next sequence. DMA sequences do not contend for bus access with the DSP core, instead DMAs "steal" cycles to access memory.

All DMA transfers use the DMA bus shown in the functional block diagram on page 1. Because all of the peripherals use the same bus, arbitration for DMA bus access is needed. The arbitration for DMA bus access appears in Table 4.

Table 4. I/O Bus Arbitration Priority

DMA Bus Master	Arbitration Priority
SPORT0 Receive DMA	0—Highest
SPORT1 Receive DMA	1
SPORT2 Receive DMA	2
SPORT0 Transmit DMA	3
SPORT1 Transmit DMA	4
SPORT2 Transmit DMA	5
SPI0 Receive/Transmit DMA	6
SPI1 Receive/Transmit DMA	7

Table 4. I/O Bus Arbitration Priority (Continued)

DMA Bus Master	Arbitration Priority
UART Receive DMA	8
UART Transmit DMA	9
Host Port DMA	10
Memory DMA	11—Lowest

Host Port

The ADSP-2196's Host port functions as a slave on the external bus of an external Host. The Host port interface lets a Host read from or write to the DSP's memory space, boot space, or internal I/O space. Examples of Hosts include external microcontrollers, microprocessors, or ASICs.

The Host port is a multiplexed address and data bus that provides both an 8-bit and a 16-bit data path and operates using an asynchronous transmission protocol. Through this port, an off-chip Host can directly access the DSP's entire memory space map, boot memory space, and internal I/O space. To access the DSP's internal memory space, a Host steals one cycle per access from the DSP. A Host access to the DSP's external memory uses the external port interface and does not stall (or steal cycles from) the DSP's core. Because a Host can access internal I/O memory space, a Host can control any of the DSP's I/O mapped peripherals.

The Host port is most efficient when using the DSP as a slave and uses DMA to automate the incrementing of addresses for these accesses. In this case, an address does not have to be transferred from the Host for every data transfer.

Host Port Acknowledge (HACK) Modes

The Host port supports a number of modes (or protocols) for generating a HACK output for the host. The host selects ACK or Ready Modes using the HACK_P and HACK pins. The Host port also supports two modes for address control: Address Latch Enable (ALE) and Address Cycle Control (ACC) modes. The DSP auto-detects ALE versus ACC Mode from the HALE and $\overline{\text{HWR}}$ inputs.

The host port HACK signal polarity is selected (only at reset) as active high or active low, depending on the value driven on the HACK_P pin.The HACK polarity is stored into the host port configuration register as a read only bit.

The DSP uses HACK to indicate to the Host when to complete an access. For a read transaction, a Host can proceed and complete an access when valid data is present in the read buffer and the host port is not busy doing a write. For a write transactions, a Host can complete an access when the write buffer is not full and the host port is not busy doing a write.

This information applies to a product under development. Its characteristics and specifications are subject to change without notice. Analog Devices assumes no obligation regarding future manufacturing unless otherwise agreed to in writing.

Two mode bits in the Host Port configuration register HPCR [7:6] define the functionality of the HACK line. HPCR6 is initialized at reset based on the values driven on HACK and HACK_P pins (shown in Table 5); HPCR7 is always cleared (0) at reset. HPCR [7:6] can be modified after reset by a write access to the host port configuration register.

Table 5. Host Port Acknowledge Mode Selection

Values Driven At Reset		HPCR [7:6] Initial Values		Acknowledge Mode
HACK_P	HACK	Bit 7	Bit 6	
0	0	0	1	Ready Mode
0	1	0	0	ACK Mode
1	0	0	0	ACK Mode
1	1	0	1	Ready Mode

The functional modes selected by HPCR [7:6] are as follows (assuming active high signal):

- **ACK Mode**—Acknowledge is active on strobes; HACK goes high from the leading edge of the strobe to indicate when the access can complete. After the Host samples the HACK active, it can complete the access by removing the strobe.The host port then removes the HACK.
- **Ready Mode**—Ready active on strobes, goes low to insert wait state during the access.If the host port can not complete the access, it de-asserts the HACK/READY line. In this case, the Host has to extend the access by keeping the strobe asserted. When the Host samples the HACK asserted, it can then proceed and complete the access by de-asserting the strobe.

While in Address Cycle Control (ACC) mode and the ACK or Ready acknowledge modes, the HACK is returned active for any address cycle.

Host Port Chip Selects

There are two chip-select signals associated with the Host Port: $\overline{\text{HCMS}}$ and $\overline{\text{HCIOMS}}$. The Host Chip Memory Select ($\overline{\text{HCMS}}$) lets the Host select the DSP and directly access the DSP's internal/external memory space or boot memory space. The Host Chip I/O Memory Select ($\overline{\text{HCIOMS}}$) lets the Host select the DSP and directly access the DSP's internal I/O memory space.

Before starting a direct access, the Host configures Host port interface registers, specifying the width of external data bus (8- or 16-bit) and the target address page (in the IJPG register). The DSP generates the needed memory select signals during the access, based on the target address. The Host port interface combines the data from one, two, or three consecutive Host accesses (up to one 24-bit value) into a single DMA bus access to prefetch Host direct reads or to post direct writes. During assembly of larger words, the Host port interface asserts ACK for each byte access that does not start a read or complete a write. Otherwise, the Host port interface asserts ACK when it has completed the memory access successfully.

DSP Serial Ports (SPORTs)

The ADSP-2196 incorporates three complete synchronous serial ports (SPORT0, SPORT1, and SPORT2) for serial and multiprocessor communications. The SPORTs support the following features:

- Bidirectional operation—each SPORT has independent transmit and receive pins.
- Buffered (8-deep) transmit and receive ports—each port has a data register for transferring data words to and from other DSP components and shift registers for shifting data in and out of the data registers.
- Clocking—each transmit and receive port can either use an external serial clock (≤75 MHz) or generate its own, in frequencies ranging from 1144 Hz to 75 MHz.
- Word length—each SPORT supports serial data words from 3 to 16 bits in length transferred in Big Endian (MSB) or Little Endian (LSB) format.
- Framing—each transmit and receive port can run with or without frame sync signals for each data word. Frame sync signals can be generated internally or externally, active high or low, and with either of two pulsewidths and early or late frame sync.
- Companding in hardware—each SPORT can perform A-law or μ-law companding according to ITU recommendation G.711. Companding can be selected on the transmit and/or receive channel of the SPORT without additional latencies.
- DMA operations with single-cycle overhead—each SPORT can automatically receive and transmit multiple buffers of memory data, one data word each DSP cycle. Either the DSP's core or a Host processor can link or chain sequences of DMA transfers between a SPORT and memory. The chained DMA can be dynamically allocated and updated through the DMA descriptors (DMA transfer parameters) that set up the chain.
- Interrupts—each transmit and receive port generates an interrupt upon completing the transfer of a data word or after transferring an entire data buffer or buffers through DMA.
- Multichannel capability—each SPORT supports the H.100 standard.

This information applies to a product under development. Its characteristics and specifications are subject to change without notice. Analog Devices assumes no obligation regarding future manufacturing unless otherwise agreed to in writing.

Serial Peripheral Interface (SPI) Ports

The DSP has two SPI-compatible ports that enable the DSP to communicate with multiple SPI-compatible devices. These ports are multiplexed with SPORT2, so either SPORT2 or the SPI ports are active, depending on the state of the OPMODE pin during hardware reset.

The SPI interface uses three pins for transferring data: two data pins (Master Output-Slave Input, MOSIx, and Master Input-Slave Output, MISOx) and a clock pin (Serial Clock, SCKx). Two SPI chip select input pins ($\overline{\text{SPISSx}}$) let other SPI devices select the DSP, and fourteen SPI chip select output pins (SPIxSEL7–1) let the DSP select other SPI devices. The SPI select pins are reconfigured Programmable Flag pins. Using these pins, the SPI ports provide a full duplex, synchronous serial interface, which supports both master and slave modes and multimaster environments.

Each SPI port's baud rate and clock phase/polarities are programmable (see Figure 4), and each has an integrated DMA controller, configurable to support both transmit and receive data streams. The SPI's DMA controller can only service unidirectional accesses at any given time.

$$\text{SPI Clock Rate} = \frac{HCLK}{2 \times SPIBAUD}$$

Figure 4. SPI Clock Rate Calculation

During transfers, the SPI ports simultaneously transmit and receive by serially shifting data in and out on their two serial data lines. The serial clock line synchronizes the shifting and sampling of data on the two serial data lines.

In master mode, the DSP's core performs the following sequence to set up and initiate SPI transfers:

1. Enables and configures the SPI port's operation (data size, and transfer format).
2. Selects the target SPI slave with an SPIxSELy output pin (reconfigured Programmable Flag pin).
3. Defines one or more DMA descriptors in Page 0 of I/O memory space (optional in DMA mode only).
4. Enables the SPI DMA engine and specifies transfer direction (optional in DMA mode only).
5. In non-DMA mode only, reads or writes the SPI port receive or transmit data buffer.

The SCKx line generates the programmed clock pulses for simultaneously shifting data out on MOSIx and shifting data in on MISOx. In DMA mode only, transfers continue until the SPI DMA word count transitions from 1 to 0.

In slave mode, the DSP's core performs the following sequence to set up the SPI port to receive data from a master transmitter:

1. Enables and configures the SPI slave port to match the operation parameters set up on the master (data size and transfer format) SPI transmitter.
2. Defines and generates a receive DMA descriptor in Page 0 of memory space to interrupt at the end of the data transfer (optional in DMA mode only).
3. Enables the SPI DMA engine for a receive access (optional in DMA mode only).
4. Starts receiving the data on the appropriate SPI SCKx edges after receiving an SPI chip select on an $\overline{\text{SPISSx}}$ input pin (reconfigured Programmable Flag pin) from a master

In DMA mode only, reception continues until the SPI DMA word count transitions from 1 to 0. The DSP's core could continue, by queuing up the next DMA descriptor.

A slave mode transmit operation is similar, except the DSP's core specifies the data buffer in memory space from which to transmit data, generates and relinquishes control of the transmit DMA descriptor, and begins filling the SPI port's data buffer. If the SPI controller isn't ready on time to transmit, it can transmit a "zero" word.

UART Port

The UART port provides a simplified UART interface to another peripheral or Host. It performs full duplex, asynchronous transfers of serial data. Options for the UART include support for 5–8 data bits; 1 or 2 stop bits; and none, even, or odd parity. The UART port supports two modes of operation:

- PIO (programmed I/O)

  The DSP's core sends or receives data by writing or reading I/O-mapped UATX or UARX registers, respectively. The data is double-buffered on both transmit and receive.

- DMA (direct memory access)

  The DMA controller transfers both transmit and receive data. This reduces the number and frequency of interrupts required to transfer data to and from memory. The UART has two dedicated DMA channels. These DMA channels have lower priority than most DMA channels because of their relatively low service rates.

The UART's baud rate (see Figure 5), serial data format, error code generation and status, and interrupts are programmable:

- Supported bit rates range from 95 bits to 6.25M bits per second (100 MHz peripheral clock).
- Supported data formats are 7- or 12-bit frames.
- Transmit and receive status can be configured to generate maskable interrupts to the DSP's core.

$$\text{UART Clock Rate} = \frac{HCLK}{16 \times D}$$

Figure 5. UART Clock Rate Calculation[1]

[1]Where D = 1 to 65536

The timers can be used to provide a hardware-assisted autobaud detection mechanism for the UART interface.

Programmable Flag (PFx) Pins

The ADSP-2196 has 16 bidirectional, general-purpose I/O, Programmable Flag (PF15–0) pins. The PF7–0 pins are dedicated to general-purpose I/O. The PF15–8 pins serve either as general-purpose I/O pins (if the DSP is connected to an 8-bit external data bus) or serve as DATA15–8 lines (if the DSP is connected to a 16-bit external data bus). The Programmable Flag pins have special functions for clock multiplier selection and for SPI port operation. For more information, see Serial Peripheral Interface (SPI) Ports on page 12 and Clock Signals on page 14. Ten memory-mapped registers control operation of the Programmable Flag pins:

- Flag Direction register

  Specifies the direction of each individual PFx pin as input or output.

- Flag Control and Status registers

  Specify the value to drive on each individual PFx output pin. As input, software can predicate instruction execution on the value of individual PFx input pins captured in this register. One register sets bits, and one register clears bits.

- Flag Interrupt Mask registers

  Enable and disable each individual PFx pin to function as an interrupt to the DSP's core. One register sets bits to enable interrupt function, and one register clears bits to disable interrupt function. Input PFx pins function as hardware interrupts, and output PFx pins function as software interrupts—latching in the IMASK and IRPTL registers.

- Flag Interrupt Polarity register

  Specifies the polarity (active high or low) for interrupt sensitivity on each individual PFx pin.

- Flag Sensitivity registers

  Specify whether individual PFx pins are level- or edge-sensitive and specify—if edge-sensitive—whether just the rising edge or both the rising and falling edges of the signal are significant. One register selects the type of sensitivity, and one register selects which edges are significant for edge-sensitivity.

Low Power Operation

The ADSP-2196 has four low-power options that significantly reduce the power dissipation when the device operates under standby conditions. To enter any of these modes, the DSP executes an IDLE instruction. The ADSP-2196 uses configuration of the PDWN, STOPCK, and STOPALL bits in the PLLCTL register to select between the low-power modes as the DSP executes the IDLE. Depending on the mode, an IDLE shuts off clocks to different parts of the DSP in the different modes. The low power modes are:

- Idle
- Power-Down Core
- Power-Down Core/Peripherals
- Power-Down All

Idle Mode

When the ADSP-2196 is in Idle mode, the DSP core stops executing instructions, retains the contents of the instruction pipeline, and waits for an interrupt. The core clock and peripheral clock continue running.

To enter Idle mode, the DSP can execute the IDLE instruction anywhere in code. To exit Idle mode, the DSP responds to an interrupt and (after two cycles of latency) resumes executing instructions with the instruction after the IDLE.

Power-down Core Mode

When the ADSP-2196 is in Power-Down Core mode, the DSP core clock is off, but the DSP retains the contents of the pipeline and keeps the PLL running. The peripheral bus keeps running, letting the peripherals receive data.

To enter Power-Down Core mode, the DSP executes an IDLE instruction after performing the following tasks:

- Enter a power-down interrupt service routine
- Check for pending interrupts and I/O service routines
- Clear (= 0) the PDWN bit in the PLLCTL register
- Clear (= 0) the STOPALL bit in the PLLCTL register
- Set (= 1) the STOPCK bit in the PLLCTL register

To exit Power-Down Core mode, the DSP responds to an interrupt and (after two cycles of latency) resumes executing instructions with the instruction after the IDLE.

Power-Down Core/Peripherals Mode

When the ADSP-2196 is in Power-Down Core/Peripherals mode, the DSP core clock and peripheral bus clock are off, but the DSP keeps the PLL running. The DSP does not retain the contents of the instruction pipeline.The peripheral bus is stopped, so the peripherals cannot receive data.

To enter Power-Down Core/Peripherals mode, the DSP executes an IDLE instruction after performing the following tasks:

- Enter a power-down interrupt service routine
- Check for pending interrupts and I/O service routines

This information applies to a product under development. Its characteristics and specifications are subject to change without notice. Analog Devices assumes no obligation regarding future manufacturing unless otherwise agreed to in writing.

- Clear (= 0) the PDWN bit in the PLLCTL register
- Set (= 1) the STOPALL bit in the PLLCTL register

To exit Power-Down Core/Peripherals mode, the DSP responds to an interrupt and (after five to six cycles of latency) resumes executing instructions with the instruction after the IDLE.

Power-Down All Mode

When the ADSP-2196 is in Power-Down All mode, the DSP core clock, the peripheral clock, and the PLL are all stopped. The DSP does not retain the contents of the instruction pipeline. The peripheral bus is stopped, so the peripherals cannot receive data.

To enter Power-Down All mode, the DSP executes an IDLE instruction after performing the following tasks:

- Enter a power-down interrupt service routine
- Check for pending interrupts and I/O service routines
- Set (= 1) the PDWN bit in the PLLCTL register

To exit Power-Down Core/Peripherals mode, the DSP responds to an interrupt and (after 500 cycles to re-stabilize the PLL) resumes executing instructions with the instruction after the IDLE.

Clock Signals

The ADSP-2196 can be clocked by a crystal oscillator or a buffered, shaped clock derived from an external clock oscillator. If a crystal oscillator is used, the crystal should be connected across the CLKIN and XTAL pins, with two capacitors connected as shown in Figure 6. Capacitor values are dependent on crystal type and should be specified by the crystal manufacturer. A parallel-resonant, fundamental frequency, microprocessor-grade crystal should be used for this configuration.

If a buffered, shaped clock is used, this external clock connects to the DSP's CLKIN pin. CLKIN input cannot be halted, changed, or operated below the specified frequency during normal operation. This clock signal should be a TTL-compatible signal. When an external clock is used, the XTAL input must be left unconnected.

The DSP provides a user-programmable 1× to 32× multiplication of the input clock, including some fractional values, to support 128 external to internal (DSP core) clock ratios. The MSEL6–0, BYPASS, and DF pins decide the PLL multiplication factor at reset. At runtime, the multiplication factor can be controlled in software. To support input clocks greater that 100 MHz, the PLL uses an additional input: the Divide Frequency (DF) pin. If the input clock is greater than 100 MHz, DF must be high. If the input clock is less than 100 MHz, DF must be low. The combination of pullup and pull-down resistors in Figure 6 set up a core clock ratio of 6:1, which produces a 150 MHz core clock from the 25 MHz input. For other clock multiplier settings, see the *ADSP-219x/2191 DSP Hardware Reference*.

The peripheral clock is supplied to the CLKOUT pin.

All on-chip peripherals for the ADSP-2196 operate at the rate set by the peripheral clock. The peripheral clock is either equal to the core clock rate or one-half the DSP core clock rate. This selection is controlled by the IOSEL bit in the PLLCTL register. The maximum core clock is 160 MHz, and the maximum peripheral clock is 100 MHz—the combination of the input clock and core/peripheral clock ratios may not exceed these limits.

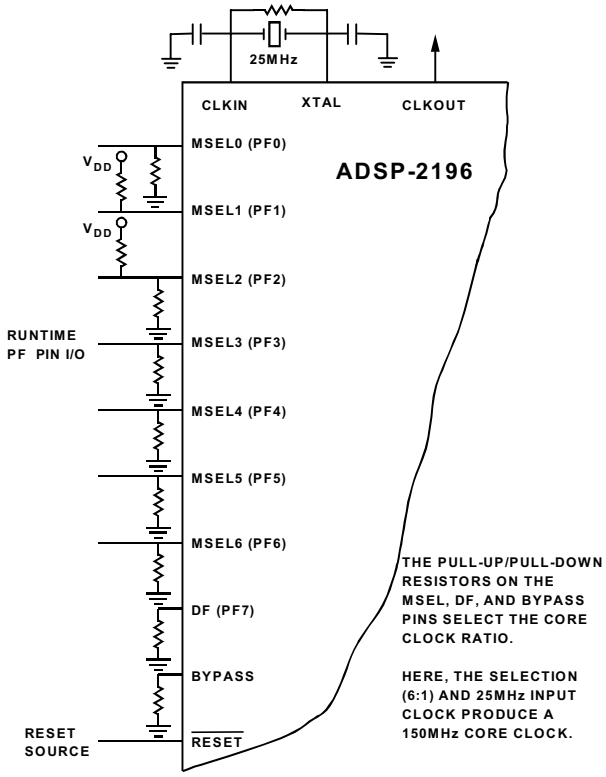

Figure 6. External Crystal Connections

Reset

The $\overline{\text{RESET}}$ signal initiates a master reset of the ADSP-2196. The $\overline{\text{RESET}}$ signal must be asserted during the power-up sequence to assure proper initialization. $\overline{\text{RESET}}$ during initial power-up must be held long enough to allow the internal clock to stabilize. If $\overline{\text{RESET}}$ is activated any time after power up, the clock does not continue to run and requires stabilization time when recovering from reset.

The power-up sequence is defined as the total time required for the crystal oscillator circuit to stabilize after a valid V_{DD} is applied to the processor, and for the internal phase-locked loop (PLL) to lock onto the specific crystal frequency. A minimum of 100 µs ensures that the PLL has locked, but does not include the crystal oscillator start-up time. During

This information applies to a product under development. Its characteristics and specifications are subject to change without notice. Analog Devices assumes no obligation regarding future manufacturing unless otherwise agreed to in writing.

this power-up sequence the $\overline{\text{RESET}}$ signal should be held low. On any subsequent resets, the $\overline{\text{RESET}}$ signal must meet the minimum pulsewidth specification, t_{RSP}.

The $\overline{\text{RESET}}$ input contains some hysteresis. If using an RC circuit to generate your $\overline{\text{RESET}}$ signal, the circuit should use an external Schmidt trigger.

The master reset sets all internal stack pointers to the empty stack condition, masks all interrupts, and resets all registers to their default values (where applicable). When $\overline{\text{RESET}}$ is released, if there is no pending bus request and the chip is configured for booting, the boot-loading sequence is performed. Program control jumps to the location of the on-chip boot ROM (0xFF0000).

Power Supplies

The ADSP-2196 has separate power supply connections for the internal (V_{DDINT}) and external (V_{DDEXT}) power supplies. The internal supply must meet the 2.5 V requirement. The external supply must be connected to a 3.3 V supply. All external supply pins must be connected to the same supply.

As indicated in Table 6, the OPMODE pin has a dual role, acting as a boot mode select during reset and determining SPORT or SPI operation at runtime. If the OPMODE pin at reset is the opposite of what is needed in an application during runtime, the application needs to set the OPMODE bit appropriately during runtime prior to using the corresponding peripheral.

Booting Modes

The ADSP-2196 has seven mechanisms (listed in Table 6) for automatically loading internal program memory after reset.

Table 6. Select Boot Mode (OPMODE, BMODE1, and BMODE0)

OPMODE	BMODE1	BMODE0	Function
0	0	0	Execute from external memory 16 bits (No Boot)
0	0	1	Boot from EPROM
0	1	0	Boot from Host
0	1	1	Reserved
1	0	0	Execute from external memory 8 bits (No Boot)
1	0	1	Boot from UART
1	1	0	Boot from SPI, up to 4K bits
1	1	1	Boot from SPI, >4K bits up to 512K bits

The OPMODE, BMODE1, and BMODE0 pins, sampled during hardware reset, and three bits in the Reset Configuration Register implement these modes:

- Boot from memory external 16 bits—The memory boot routine located in boot ROM memory space executes a boot-stream-formatted program located at address 0x10000 of boot memory space, packing 16-bit external data into 24-bit internal data. The External Port Interface is configured for the default clock multiplier (128) and read waitstates (7).
- Boot from EPROM—The EPROM boot routine located in boot ROM memory space executes a boot-stream-formatted program located at address 0x10000 of boot memory space, packing 8- or 16-bit external data into 24-bit internal data. The External Port Interface is configured for the default clock multiplier (32) and read waitstates (7).
- Boot from Host—The (8- or 16-bit) Host downloads a boot-stream-formatted program to internal or external memory. The Host's boot routine is located in internal ROM memory space and uses the top 16 locations of Page 0 program memory and the top 272 locations of Page 0 data memory.

  The internal boot ROM sets semaphore A (an IO register within the host port) and then polls until the semaphore is reset. Once detected, the internal boot ROM will remap the interrupt vector table to Page 0 internal memory and jump to address 0x0000 internal. From the point of view of the host interface, an external host has full control of the DSP's memory map. The Host has the freedom to directly write internal memory, external memory, and internal I/O memory space. The DSP core execution is held off until the Host clears the semaphore register. This strategy allows the maximum flexibility for the Host to boot in the program and data code, by leaving it up to the programmer.
- Execute from memory external 8 bits (No Boot)—execution starts from Page 1 of external memory space, packing either 8- or 16-bit external data into 24-bit internal data. The External Port Interface is configured for the default clock multiplier (128) and read waitstates (7).
- Boot from UART—The Host downloads boot-stream-formatted program using an autobaud handshake sequence. The Host agent selects a baud rate within the UART's clocking capabilities. After a hardware reset, the DSP's UART transmits 0xFF values (eight bits data, one start bit, one stop bit, no parity bit) until detecting the start of the first memory block. The UART boot routine is located in internal ROM memory space and uses the top 16 locations of Page 0 program memory and the top 272 locations of Page 0 data memory.

This information applies to a product under development. Its characteristics and specifications are subject to change without notice. Analog Devices assumes no obligation regarding future manufacturing unless otherwise agreed to in writing.

- Boot from SPI, up to 4K bits—The SPI0 port uses the SPI0SEL1 (reconfigured PF2) output pin to select a single serial EPROM device, submits a read command at address 0x00, and begins clocking consecutive data into internal or external memory. Use only SPI-compatible EPROMs of ≤ 4K bit (12-bit address range). The SPI0 boot routine located in internal ROM memory space executes a boot-stream-formatted program, using the top 16 locations of Page 0 program memory and the top 272 locations of Page 0 data memory. The SPI boot configuration is SPIBAUD0=60 (decimal), CPHA=1, CPOL=1, 8-bit data, and MSB first.
- Boot from SPI, from >4K bits to 512K bits—The SPI0 port uses the SPI0SEL1 (re-configured PF2) output pin to select a single serial EPROM device, submits a read command at address 0x00, and begins clocking consecutive data into internal or external memory. Use only SPI-compatible EPROMs of ≥ 4K bit (16-bit address range). The SPI0 boot routine located in internal ROM memory space executes a boot-stream-formatted program, using the top 16 locations of Page 0 program memory and the top 272 locations of Page 0 data memory.

Bus Request and Bus Grant

The ADSP-2196 can relinquish control of the data and address buses to an external device. When the external device requires access to the bus, it asserts the bus request ($\overline{BR}$) signal. The ($\overline{BR}$) signal is arbitrated with core and peripheral requests. External Bus requests have the lowest priority. If no other internal request is pending, the external bus request will be granted. Due to synchronizer and arbitration delays, bus grants will be provided with a minimum of three peripheral clock delays. The ADSP-2196 will respond to the bus grant by:

- Three-stating the data and address buses and the $\overline{MS3–0}$, $\overline{BMS}$, $\overline{IOMS}$, $\overline{RD}$, and $\overline{WR}$ output drivers.
- Asserting the bus grant ($\overline{BG}$) signal.

The ADSP-2196 will halt program execution if the bus is granted to an external device and an instruction fetch or data read/write request is made to external general-purpose or peripheral memory spaces. If an instruction requires two external memory read accesses, the bus will not be granted between the two accesses. If an instruction requires an external memory read and an external memory write access, the bus may be granted between the two accesses. The external memory interface can be configured so that the core will have exclusive use of the interface. DMA and Bus Requests will be granted. When the external device releases $\overline{BR}$, the DSP releases $\overline{BG}$ and continues program execution from the point at which it stopped.

The bus request feature operates at all times, even while the DSP is booting and $\overline{RESET}$ is active.

The ADSP-2196 asserts the $\overline{BGH}$ pin when it is ready to start another external port access, but is held off because the bus was previously granted. This mechanism can be extended to define more complex arbitration protocols for implementing more elaborate multimaster systems.

Instruction Set Description

The ADSP-2196 assembly language instruction set has an algebraic syntax that was designed for ease of coding and readability. The assembly language, which takes full advantage of the processor's unique architecture, offers the following benefits:

- ADSP-219x assembly language syntax is a superset of and source-code-compatible (except for two data registers and DAG base address registers) with ADSP-218x family syntax. It may be necessary to restructure ADSP-218x programs to accommodate the ADSP-2196's unified memory space and to conform to its interrupt vector map.
- The algebraic syntax eliminates the need to remember cryptic assembler mnemonics. For example, a typical arithmetic add instruction, such as AR = AX0 + AY0, resembles a simple equation.
- Every instruction, but two, assembles into a single, 24-bit word that can execute in a single instruction cycle. The exceptions are two dual word instructions. One writes 16- or 24-bit immediate data to memory, and the other is an absolute jump/call with the 24-bit address specified in the instruction.
- Multifunction instructions allow parallel execution of an arithmetic, MAC, or shift instruction with up to two fetches or one write to processor memory space during a single instruction cycle.
- Program flow instructions support a wider variety of conditional and unconditional jumps/calls and a larger set of conditions on which to base execution of conditional instructions.

Development Tools

The ADSP-2196 is supported with a complete set of software and hardware development tools, including Analog Devices' emulators and VisualDSP++® development environment. The same emulator hardware that supports other ADSP-219x DSPs, also fully emulates the ADSP-2196.

The VisualDSP++ project management environment lets programmers develop and debug an application. This environment includes an easy-to-use assembler that is based on an algebraic syntax; an archiver (librarian/library builder), a linker, a loader, a cycle-accurate instruction-level simula-

This information applies to a product under development. Its characteristics and specifications are subject to change without notice. Analog Devices assumes no obligation regarding future manufacturing unless otherwise agreed to in writing.

tor, a C/C++ compiler, and a C/C++ run-time library that includes DSP and mathematical functions. Two key points for these tools are:

- Compiled ADSP-219x C/C++ code efficiency—the compiler has been developed for efficient translation of C/C++ code to ADSP-219x assembly. The DSP has architectural features that improve the efficiency of compiled C/C++ code.
- ADSP-218x family code compatibility—The assembler has legacy features to ease the conversion of existing ADSP-218x applications to the ADSP-219x.

Debugging both C/C++ and assembly programs with the VisualDSP++ debugger, programmers can:

- View mixed C/C++ and assembly code (interleaved source and object information)
- Insert break points
- Set conditional breakpoints on registers, memory, and stacks
- Trace instruction execution
- Perform linear or statistical profiling of program execution
- Fill, dump, and graphically plot the contents of memory
- Source level debugging
- Create custom debugger windows

The VisualDSP++ IDE lets programmers define and manage DSP software development. Its dialog boxes and property pages let programmers configure and manage all of the ADSP-219x development tools, including the syntax highlighting in the VisualDSP++ editor. This capability permits:

- Control how the development tools process inputs and generate outputs.
- Maintain a one-to-one correspondence with the tool's command line switches.

Analog Devices' DSP emulators use the IEEE 1149.1 JTAG test access port of the ADSP-2196 processor to monitor and control the target board processor during emulation. The emulator provides full-speed emulation, allowing inspection and modification of memory, registers, and processor stacks. Nonintrusive in-circuit emulation is assured by the use of the processor's JTAG interface—the emulator does not affect target system loading or timing.

In addition to the software and hardware development tools available from Analog Devices, third parties provide a wide range of tools supporting the ADSP-219x processor family. Hardware tools include ADSP-219x PC plug-in cards. Third Party software tools include DSP libraries, real-time operating systems, and block diagram design tools.

Designing an Emulator-Compatible DSP Board (Target)

The White Mountain DSP (Product Line of Analog Devices, Inc.) family of emulators are tools that every DSP developer needs to test and debug hardware and software systems. Analog Devices has supplied an IEEE 1149.1 JTAG Test Access Port (TAP) on each JTAG DSP. The emulator uses the TAP to access the internal features of the DSP, allowing the developer to load code, set breakpoints, observe variables, observe memory, and examine registers. The DSP must be halted to send data and commands, but once an operation has been completed by the emulator, the DSP system is set running at full speed with no impact on system timing.

To use these emulators, the target's design must include the interface between an Analog Devices' JTAG DSP and the emulation header on a custom DSP target board.

Target Board Header

The emulator interface to an Analog Devices' JTAG DSP is a 14-pin header, as shown in Figure 7. The customer must supply this header on the target board in order to communicate with the emulator. The interface consists of a standard dual row 0.025" square post header, set on 0.1" × 0.1" spacing, with a minimum post length of 0.235". Pin 3 is the key position used to prevent the pod from being inserted backwards. This pin must be clipped on the target board.

Also, the clearance (length, width, and height) around the header must be considered. Leave a clearance of at least 0.15" and 0.10" around the length and width of the header, and reserve a height clearance to attach and detach the pod connector.

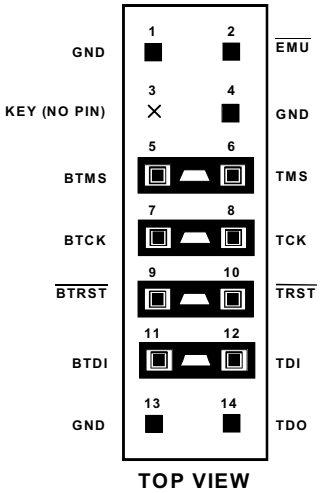

Figure 7. JTAG Target Board Connector for JTAG Equipped Analog Devices DSP (Jumpers in Place)

This information applies to a product under development. Its characteristics and specifications are subject to change without notice. Analog Devices assumes no obligation regarding future manufacturing unless otherwise agreed to in writing.

As can be seen in Figure 7, there are two sets of signals on the header. There are the standard JTAG signals TMS, TCK, TDI, TDO, $\overline{\text{TRST}}$, and $\overline{\text{EMU}}$ used for emulation purposes (via an emulator). There are also secondary JTAG signals BTMS, BTCK, BTDI, and $\overline{\text{BTRST}}$ that are optionally used for board-level (boundary scan) testing.

When the emulator is not connected to this header, place jumpers across BTMS, BTCK, $\overline{\text{BTRST}}$, and BTDI as shown in Figure 8. This holds the JTAG signals in the correct state to allow the DSP to run free. Remove all the jumpers when connecting the emulator to the JTAG header.

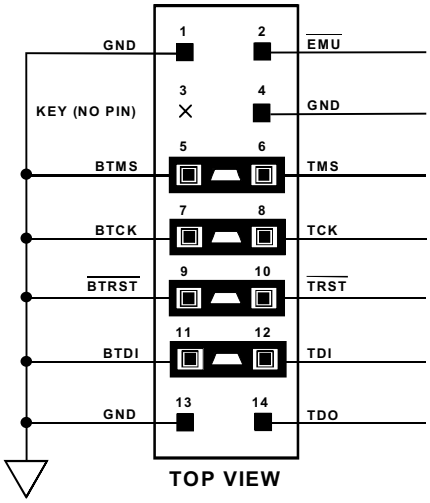

Figure 8. JTAG Target Board Connector with No Local Boundary Scan

JTAG Emulator Pod Connector

Figure 9 details the dimensions of the JTAG pod connector at the 14-pin target end. Figure 10 displays the keep-out area for a target board header. The keep-out area allows the pod connector to properly seat onto the target board header. This board area should contain no components (chips, resistors, capacitors, etc.). The dimensions are referenced to the center of the 0.25" square post pin.

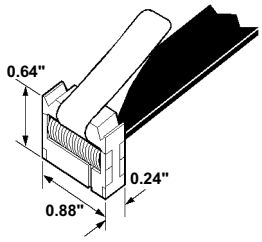

Figure 9. JTAG Pod Connector Dimensions

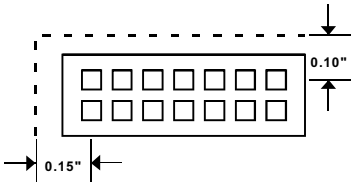

Figure 10. JTAG Pod Connector Keep-Out Area

Design-for-Emulation Circuit Information

For details on target board design issues including: single processor connections, multiprocessor scan chains, signal buffering, signal termination, and emulator pod logic, see the *EE-68: Analog Devices JTAG Emulation Technical Reference* on the Analog Devices website (www.analog.com)—use site search on "EE-68". This document is updated regularly to keep pace with improvements to emulator support.

Additional Information

This data sheet provides a general overview of the ADSP-2196 architecture and functionality. For detailed information on the ADSP-219x family core architecture and instruction set, refer to the *ADSP-219x/2191 DSP Hardware Reference*.

PIN DESCRIPTIONS

ADSP-2196 pin definitions are listed in Table 7. All ADSP-2196 inputs are asynchronous and can be asserted asynchronously to CLKIN (or to TCK for $\overline{\text{TRST}}$).

Unused inputs should be tied or pulled to V_{DDEXT} or GND, except for ADDR21–0, DATA15–0, PF7-0, and inputs that have internal pull-up or pull-down resistors ($\overline{\text{TRST}}$, BMODE0, BMODE1, OPMODE, BYPASS, TCK, TMS, TDI, and $\overline{\text{RESET}}$)—these pins can be left floating. These pins have a logic-level hold circuit that prevents input from floating internally.

The following symbols appear in the Type column of Table 7: G = Ground, I = Input, O = Output, P = Power Supply, and T = Three-State.

Table 7. Pin Descriptions

Pin	Type	Function
A21–0	O/T	External Port Address Bus
D7–0	I/O/T	External Port Data Bus, least significant 8 bits
D15 /PF15 /SPI1SEL7	I/O/T I/O I	Data 15 (if 16-bit external bus)/Programmable Flags 15 (if 8-bit external bus)/SPI1 Slave Select output 7 (if 8-bit external bus, when SPI1 enabled)
D14 /PF14 /SPI0SEL7	I/O/T I/O I	Data 14 (if 16-bit external bus)/Programmable Flags 14 (if 8-bit external bus)/SPI0 Slave Select output 7 (if 8-bit external bus, when SPI0 enabled)
D13 /PF12 /SPI1SEL6	I/O/T I/O I	Data 13 (if 16-bit external bus)/Programmable Flags 13 (if 8-bit external bus)/SPI1 Slave Select output 6 (if 8-bit external bus, when SPI1 enabled)
D12 /PF12 /SPI0SEL6	I/O/T I/O I	Data 12 (if 16-bit external bus)/Programmable Flags 12 (if 8-bit external bus)/SPI0 Slave Select output 6 (if 8-bit external bus, when SPI0 enabled)
D11 /PF11 /SPI1SEL5	I/O/T I/O I	Data 11 (if 16-bit external bus)/Programmable Flags 11 (if 8-bit external bus)/SPI1 Slave Select output 5 (if 8-bit external bus, when SPI1 enabled)
D10 /PF10 /SPI0SEL5	I/O/T I/O I	Data 10 (if 16-bit external bus)/Programmable Flags 10 (if 8-bit external bus)/SPI0 Slave Select output 5 (if 8-bit external bus, when SPI0 enabled)
D9 /PF9 /SPI1SEL4	I/O/T I/O I	Data 9 (if 16-bit external bus)/Programmable Flags 9 (if 8-bit external bus)/SPI1 Slave Select output 4 (if 8-bit external bus, when SPI1 enabled)
D8 /PF8 /SPI0SEL4	I/O/T I/O I	Data 8 (if 16-bit external bus)/Programmable Flags 8 (if 8-bit external bus)/SPI0 Slave Select output 4 (if 8-bit external bus, when SPI0 enabled)
PF7 /SPI1SEL3 /DF	I/O/T I I	Programmable Flags 7/SPI1 Slave Select output 3 (when SPI0 enabled)/Divisor Frequency (divisor select for PLL input during boot)
PF6 /SPI0SEL3 /MSEL6	I/O/T I I	Programmable Flags 6/SPI0 Slave Select output 3 (when SPI0 enabled)/Multiplier Select 6 (during boot)
PF5 /SPI1SEL2 /MSEL5	I/O/T I I	Programmable Flags 5/SPI1 Slave Select output 2 (when SPI0 enabled)/Multiplier Select 5 (during boot)
PF4 /SPI0SEL2 /MSEL4	I/O/T I I	Programmable Flags 4/SPI0 Slave Select output 2 (when SPI0 enabled)/Multiplier Select 4 (during boot)
PF3 /SPI1SEL1 /MSEL3	I/O/T I I	Programmable Flags 3/SPI1 Slave Select output 1 (when SPI0 enabled)/Multiplier Select 3 (during boot)

This information applies to a product under development. Its characteristics and specifications are subject to change without notice. Analog Devices assumes no obligation regarding future manufacturing unless otherwise agreed to in writing.

Table 7. Pin Descriptions (Continued)

Pin	Type	Function
PF2 /SPI0SEL1 /MSEL2	I/O/T I I	Programmable Flags 2/SPI0 Slave Select output 1 (when SPI0 enabled)/Multiplier Select 2 (during boot)
PF1 /SPISS1 /MSEL1	I/O/T I I	Programmable Flags 1/SPI1 Slave Select input (when SPI1 enabled)/Multiplier Select 1 (during boot)
PF0 /SPISS0 /MSEL0	I/O/T I I	Programmable Flags 0/SPI0 Slave Select input (when SPI0 enabled)/Multiplier Select 0 (during boot)
$\overline{\text{RD}}$	O/T	External Port Read Strobe
$\overline{\text{WR}}$	O/T	External Port Write Strobe
ACK	I	External Port Access Ready Acknowledge
$\overline{\text{BMS}}$	O/T	External Port Boot Space Select
$\overline{\text{IOMS}}$	O/T	External Port IO Space Select
$\overline{\text{MS3–0}}$	O/T	External Port Memory Space Selects
$\overline{\text{BR}}$	I	External Port Bus Request
$\overline{\text{BG}}$	O	External Port Bus Grant
$\overline{\text{BGH}}$	O	External Port Bus Grant Hang
HAD15–0	I/O/T	Host Port Multiplexed Address and Data Bus
HA16	I	Host Port MSB of Address Bus
HACK_P	I	Host Port ACK Polarity
$\overline{\text{HRD}}$	I	Host Port Read Strobe
$\overline{\text{HWR}}$	I	Host Port Write Strobe
HACK	O	Host Port Access Ready Acknowledge
HALE	I	Host Port Address Latch Strobe or Address Cycle Control
$\overline{\text{HCMS}}$	I	Host Port Internal Memory–Internal I/O Memory–Boot Memory Select
$\overline{\text{HCIOMS}}$	I	Host Port Internal I/O Memory Select
CLKIN	I	Clock Input/Oscillator input
XTAL	O	Oscillator output
BMODE1–0	I	Boot Mode 1–0. The BMODE1 and BMODE0 pins have 85 kΩ internal pull-up resistors.
OPMODE	I	Operating Mode. The OPMODE pin has a 85 kΩ internal pull-up resistor.
CLKOUT	O	Clock Output
BYPASS	I	Phase-Lock-Loop (PLL) Bypass mode. The BYPASS pin has a 85 kΩ internal pull-up resistor.

Table 7. Pin Descriptions (Continued)

Pin	Type	Function
RCLK1–0	I/O/T	SPORT1–0 Receive Clock
RCLK2/SCK1	I/O/T	SPORT2 Receive Clock/SPI1 Serial Clock
RFS1–0	I/O/T	SPORT1–0 Receive Frame Sync
RFS2/MOSI1	I/O/T	SPORT2 Receive Frame Sync/SPI1 Master-Output, Slave-Input data
TCLK1–0	I/O/T	SPORT1–0 Transmit Clock
TCLK2/SCK0	I/O/T	SPORT2 Transmit Clock/SPI0 Serial Clock
TFS1–0	I/O/T	SPORT1–0 Transmit Frame Sync
TFS2/MOSI0	I/O/T	SPORT2 Transmit Frame Sync/SPI0 Master-Output, Slave-Input data
DR1–0	I/T	SPORT1–0 Serial Data Receive
DR2/MISO1	I/O/T	SPORT2 Serial Data Receive/SPI1 Master-Input, Slave-Output data
DT1–0	O/T	SPORT1–0 Serial Data Transmit
DT2/MISO0	I/O/T	SPORT2 Serial Data Transmit/SPI0 Master-Input, Slave-Output data
TMR2–0	I/O/T	Timer output or capture
RXD	I	UART Serial Receive Data
TXD	O	UART Serial Transmit Data
$\overline{\text{RESET}}$	I	Processor Reset. Resets the ADSP-2196 to a known state and begins execution at the program memory location specified by the hardware reset vector address. The $\overline{\text{RESET}}$ input must be asserted (low) at power-up. The RESET pin has a 85 kΩ internal pull-up resistor.
TCK	I	Test Clock (JTAG). Provides a clock for JTAG boundary scan. The TCK pin has a 85 kΩ internal pull-up resistor.
TMS	I	Test Mode Select (JTAG). Used to control the test state machine. The TMS pin has a 85 kΩ internal pull-up resistor.
TDI	I	Test Data Input (JTAG). Provides serial data for the boundary scan logic. The TDI pin has a 85 kΩ internal pull-up resistor.
TDO	O	Test Data Output (JTAG). Serial scan output of the boundary scan path.
$\overline{\text{TRST}}$	I	Test Reset (JTAG). Resets the test state machine. $\overline{\text{TRST}}$ must be asserted (pulsed low) after power-up or held low for proper operation of the ADSP-2196. The $\overline{\text{TRST}}$ pin has a 65 kΩ internal pull-down resistor.
$\overline{\text{EMU}}$	O	Emulation Status (JTAG). Must be connected to the ADSP-2196 emulator target board connector only.
V_{DDINT}	P	Core Power Supply. Nominally 2.5 V dc and supplies the DSP's core processor. (four pins).
V_{DDEXT}	P	I/O Power Supply; Nominally 3.3 V dc. (nine pins).
GND	G	Power Supply Return. (twelve pins).
NC		Do Not Connect. Reserved pins that must be left open and unconnected.

This information applies to a product under development. Its characteristics and specifications are subject to change without notice. Analog Devices assumes no obligation regarding future manufacturing unless otherwise agreed to in writing.

RECOMMENDED OPERATING CONDITIONS

Parameter	Description[1]	Min	Max	Unit
V_{DDINT}	Internal (Core) Supply Voltage	2.37	2.63	V
V_{DDEXT}	External (I/O) Supply Voltage	TBD	3.6	V
V_{IH1}	High Level Input Voltage[2], @ V_{DDINT} = max	2.0	V_{DDEXT}	V
V_{IH2}	High Level Input Voltage[3], @ V_{DDINT} = max	2.2	V_{DDEXT}	V
V_{IL}	Low Level Input Voltage[2], @ V_{DDINT} = min	–0.3	0.6	V
T_{AMB}	Ambient Operating Temperature	0	70	°C

[1]Specifications subject to change without notice.

[2]Applies to input and bidirectional pins: DATA15–0, HAD15–0, HA16, HALE, HACK, HACK_P, BYPASS, $\overline{\text{HRD}}$, $\overline{\text{HWR}}$, ACK, PF7–0, $\overline{\text{HCMS}}$, $\overline{\text{HCIOMS}}$, $\overline{\text{BR}}$, TFS0, TFS1, TFS2/MOSI0, RFS0, RFS1, RFS2/MOSI1, OPMODE, BMODE1–0, TMS, TDI, TCK, DT2/MISO0, DR0, DR1, DR2/MISO1, TCLK0, TCLK1, TCLK2/SCK0, RCLK0, RCLK1, RCLK2/SCK1.

[3]Applies to input pins: CLKIN, $\overline{\text{RESET}}$, $\overline{\text{TRST}}$.

ELECTRICAL CHARACTERISTICS

Parameter[1]	Description	Test Conditions	Min	Typical	Max	Unit
V_{OH}	High Level Output Voltage[2]	@ V_{DDEXT} = min, I_{OH} = –0.5 mA	2.4			V
V_{OL}	Low Level Output Voltage[2]	@ V_{DDEXT} = min, I_{OL} = 2.0 mA			0.4	V
I_{IH}	High Level Input Current[3, 4]	@ V_{DDEXT} = max, V_{IN} = V_{DD} max			TBD	µA
I_{IL}	Low Level Input Current[2]	@ V_{DDEXT} = max, V_{IN} = 0 V			TBD	µA
I_{INP}	High Level Input Current[5]	@ V_{DDEXT} = max, V_{IN} = V_{DD} max			TBD	µA
I_{ILP}	Low Level Input Current[3]	@ V_{DDEXT} = max, V_{IN} = 0 V			TBD	µA
I_{OZH}	Three-State Leakage Current[6]	@ V_{DDEXT} = max, V_{IN} = V_{DD} max			10	µA
I_{OZL}	Three-State Leakage Current[5]	@ V_{DDEXT} = max, V_{IN} = 0 V			10	µA
$I_{DD\text{-}IDLE1}$	Supply Current (Core) Idle1	PLL Enabled, CCLK = 160 MHz[7]				mA

This information applies to a product under development. Its characteristics and specifications are subject to change without notice. Analog Devices assumes no obligation regarding future manufacturing unless otherwise agreed to in writing.

ELECTRICAL CHARACTERISTICS (CONTINUED)

Parameter[1]	Description	Test Conditions	Min	Typical	Max	Unit
$I_{DD\text{-}IDLE2}$	Supply Current (Core) Idle2	PLL Enabled, HCLK = 80 MHz, CCLK Disabled[7]		1		mA
$I_{DD\text{-}TYPICAL}$	Supply Current (Core) Typical	HCLK = 80 MHz, CCLK = 160 MHz[7,8]		184		mA
$I_{DD\text{-}PEAK}$	Supply Current (Core) Peak	HCLK = 80 MHz, CCLK = 160 MHz[7,8]		215		mA
$I_{DD\text{-}PERIPHERAL1}$	Supply Current (Peripheral)	PLL Enabled, Core, HCLK Disabled[7]		5		mA
$I_{DD\text{-}PERIPHERAL2}$	Supply Current (Peripheral)	HCLK = 80 MHz[7]		60		mA
$I_{DD\text{-}POWERDOWN}$	Supply Current	PLL, Core, HCLK, CLKIN Disabled[7]		100		µA
C_{IN}	Input Capacitance[9, 10]	f_{IN} = 1 MHz, T_{CASE} = 25°C, V_{IN} = 2.5 V			TBD	pF

[1]Specifications subject to change without notice.

[2]Applies to output and bidirectional pins: DATA15–0, ADDR21–0, HAD15–0, $\overline{MS3–0}$, $\overline{IOMS}$, $\overline{RD}$, $\overline{WR}$, CLKOUT, HACK, PF7–0, TMR2–0, $\overline{BGH}$, $\overline{BG}$, DT0, DT1, DT2/MISO0, TCLK0, TCLK1, TCLK2/SCK0, RCLK0, RCLK1, RCLK2/SCK1, TFS0, TFS1, TFS2/MOSI0, RFS0, RFS1, RFS2/MOSI1, $\overline{BMS}$, TDO, TXD, $\overline{EMU}$.

[3]Applies to input pins: ACK, $\overline{BR}$, $\overline{HCMS}$, $\overline{HCIOMS}$, OPMODE, BMODE1–0, HA16, HALE, $\overline{HRD}$, $\overline{HWR}$, CLKIN, $\overline{RESET}$, TCK, TDI, TMS, $\overline{TRST}$, DR0, DR1, BYPASS, RXD.

[4]Applies to input pins with internal pull-ups: BMODE0, BMODE1, OPMODE, BYPASS, TCK, TMS, TDI, $\overline{RESET}$.

[5]Applies to input pin with internal pull-down: $\overline{TRST}$

[6]Applies to three-statable pins: DATA15–0, ADDR21–0, $\overline{MS3–0}$, $\overline{RD}$, $\overline{WR}$, PF7–0, $\overline{BMS}$, $\overline{IOMS}$, TFSx, RFSx, TDO, $\overline{EMU}$.

[7]Test Conditions: @ V_{DDINT} = 2.5V, T_{AMB} = 25°C

[8]Refer to Table 23 on page 52 for definitions of operation types.

[9]Applies to all signal pins.

[10]Guaranteed, but not tested.

This information applies to a product under development. Its characteristics and specifications are subject to change without notice. Analog Devices assumes no obligation regarding future manufacturing unless otherwise agreed to in writing.

ABSOLUTE MAXIMUM RATINGS

V_{DDINT} Internal (Core) Supply Voltage[1,2] .....–0.3 to 3.0 V

V_{DDEXT} External (I/O) Supply Voltage .....–0.3 to 4.6 V

V_{IL}–V_{IH} Input Voltage .....–0.5 to V_{DDEXT}+0.5 V

V_{OL}–V_{OH} Output Voltage Swing .....–0.5 to V_{DDEXT}+0.5 V

C_L Load Capacitance..... 200 pF

t_{CCLK} Core Clock Period..... 6.25 ns

f_{CCLK} Core Clock Frequency..... 160 MHz

t_{HCLK} Peripheral Clock Period..... 10 ns

f_{HCLK} Peripheral Clock Frequency..... 100 MHz

T_{STORE} Storage Temperature Range ..... –65 to 150°C

T_{LEAD} Lead Temperature (5 seconds)..... 185°C

[1]Specifications subject to change without notice.

[2]Stresses greater than those listed above may cause permanent damage to the device. These are stress ratings only, and functional operation of the device at these or any other conditions greater than those indicated in the operational sections of this specification is not implied. Exposure to absolute maximum rating conditions for extended periods may affect device reliability.

ESD SENSITIVITY

CAUTION:

ESD (electrostatic discharge) sensitive device. Electrostatic charges as high as 4000V readily accumulate on the human body and test equipment and can discharge without detection. Although the ADSP-2196 features proprietary ESD protection circuitry, permanent damage may occur on devices subjected to high-energy electrostatic discharges. Therefore, proper ESD precautions are recommended to avoid performance degradation or loss of functionality.

TIMING SPECIFICATIONS

This section contains timing information for the DSP's external signals.

Clock In and Clock Out Cycle Timing

Table 8 and Figure 11 describe clock and reset operations. Per V_{DDINT}Internal (Core) Supply Voltage, –0.3 to 3.0 V on page 24, combinations of CLKIN and clock multipliers must not select core/peripheral clocks in excess of 160/100 MHz.

Table 8. Clock In and Clock Out Cycle Timing

Parameter	Description	Min	Max	Unit
Switching Characteristic				
t_{CKOD}	CLKOUT delay from CLKIN	0	5.8	ns
t_{CKO}	CLKOUT period[1]	10		ns
Timing Requirements				
t_{CK}	CLKIN period[2,3]	6.25	200	ns
t_{CKL}	CLKIN low pulse	2.2		ns
t_{CKH}	CLKIN high pulse	2.2		ns
t_{WRST}	$\overline{\text{RESET}}$ asserted pulsewidth low	$200t_{CLKOUT}$		ns
t_{MSLS}	MSELx/BYPASS stable before $\overline{\text{RESET}}$ asserted setup	160		µs
t_{MSLH}	MSELx/BYPASS stable after $\overline{\text{RESET}}$ de-asserted hold	1000		ns

[1]Figure 11 shows a ×2 ratio between CLKOUT = 2 × CLKIN (or $t_{HCLK} = 2 \times t_{CCLK}$), but the ratio has many programmable options. For more information see the System Design chapter of the *ADSP-219x/2191 DSP Hardware Reference*.

[2]In clock multiplier mode and MSEL6–0 set for 1:1 (or CLKIN=CCLK), $t_{CK}=t_{CCLK}$.

[3]In bypass mode, $t_{CK}=t_{CCLK}$.

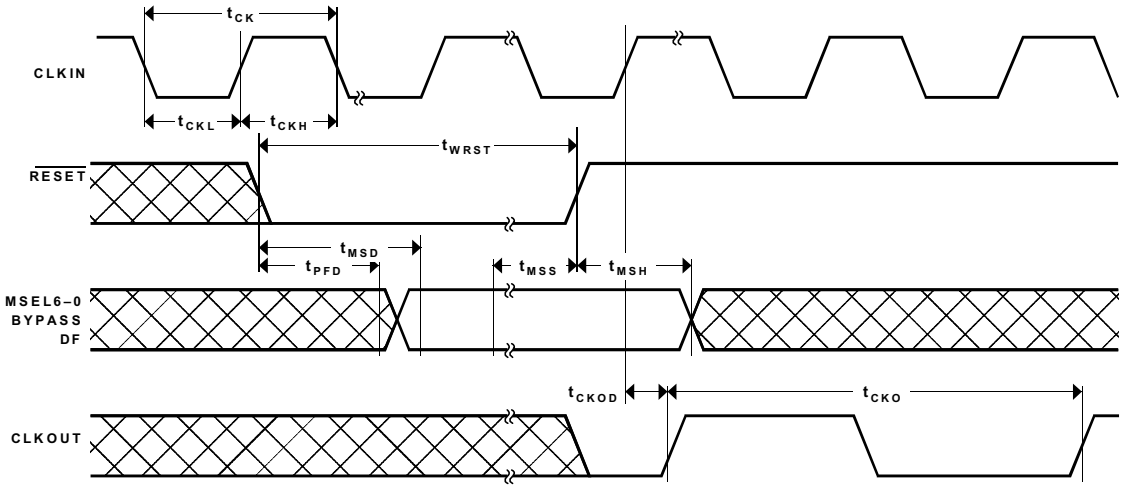

Figure 11. Clock In and Clock Out Cycle Timing

This information applies to a product under development. Its characteristics and specifications are subject to change without notice. Analog Devices assumes no obligation regarding future manufacturing unless otherwise agreed to in writing.

Programmable Flags Cycle Timing

Table 9 and Figure 12 describe programmable flag operations.

Table 9. Programmable Flags Cycle Timing

Parameter	Description	Min	Max	Unit
Switching Characteristic				
t_{DFO}	Flag output delay with respect to HCLK		3	ns
t_{HFO}	Flag output hold after HCLK high	TBD	TBD	ns
Timing Requirement				
t_{HFI}	Flag input hold is asynchronous	3		ns

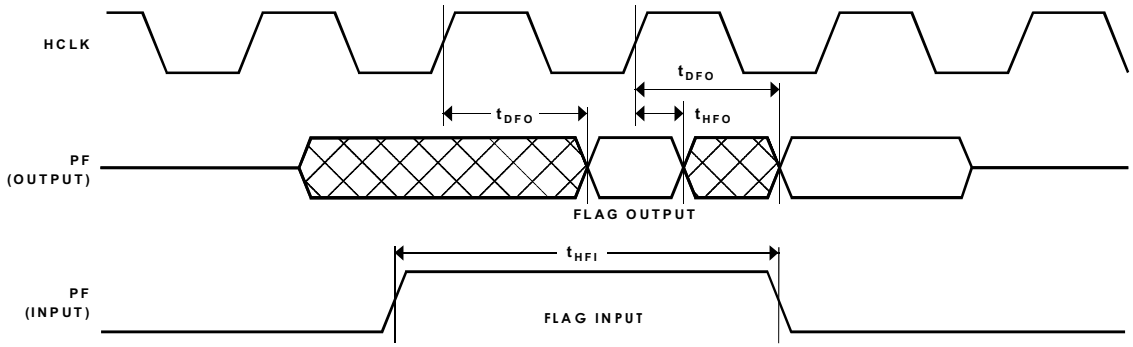

Figure 12. Programmable Flags Cycle Timing

Timer PWM_OUT Cycle Timing

Table 10 and Figure 13 describe timer expired operations. The input signal is asynchronous in "width capture mode" and has an absolute maximum input frequency of 50 MHz.

Table 10. Timer PWM_OUT Cycle Timing

Parameter	Description	Min	Max	Unit
Switching Characteristic				
t_{HTO}	Timer pulsewidth output[1]	6.25	$(2^{32}–1)$ cycles	ns

[1]The minimum time for t_{HTO} is one cycle, and the maximum time for t_{HTO} equals $(2^{32}–1)$ cycles.

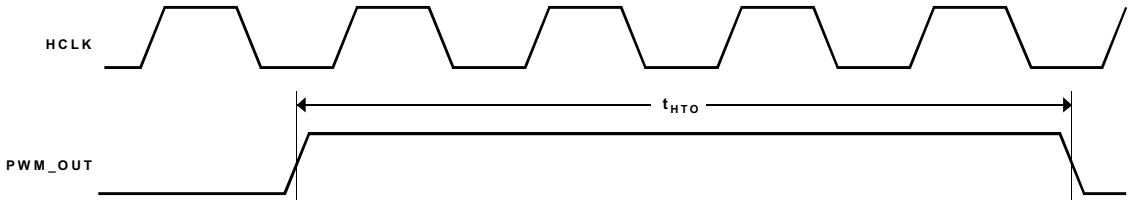

Figure 13. Timer PWM_OUT Cycle Timing

This information applies to a product under development. Its characteristics and specifications are subject to change without notice. Analog Devices assumes no obligation regarding future manufacturing unless otherwise agreed to in writing.

External Port Write Cycle Timing

Table 11 and Figure 14 describe external port write operations.

The external port lets systems extend read/write accesses in three ways: waitstates, ACK input, and combined waitstates and ACK. To add waits with ACK, the DSP must see ACK low at the rising edge of EMI clock. ACK low causes the DSP to wait, and the DSP requires two EMI clock cycles after ACK goes high to finish the access. For more information, see the External Port chapter in the *ADSP-219x/2191 DSP Hardware Reference*

Table 11. External Port Write Cycle Timing

Parameter	Description[1, 2, 3]	Min	Max	Unit
Switching Characteristics				
t_{CWA}	EMI[4] clock low to $\overline{WR}$ asserted delay		2.8	ns
t_{CSWS}	Chip select asserted to $\overline{WR}$ de-asserted delay	4.3	6.5	ns
t_{AWS}	Address valid to $\overline{WR}$ setup and delay	4.9	7.0	ns
t_{AKS}	ACK asserted to EMI clock high delay	6.0		ns
t_{WSCS}	$\overline{WR}$ de-asserted to chip select de-asserted	4.8	7.0	ns
t_{WSA}	$\overline{WR}$ de-asserted to address invalid	4.5	6.6	ns
t_{CWD}	EMI clock low to $\overline{WR}$ de-asserted delay	2.5	2.7	ns
t_{WW}	$\overline{WR}$ strobe pulsewidth	$t_{HCLK}-0.5$		ns
t_{CDA}	$\overline{WR}$ to data enable access delay	1.5	4.1	ns
t_{CDD}	$\overline{WR}$ to data disable access delay	3.3	7.4	ns
t_{DSW}	Data valid to $\overline{WR}$ de-asserted setup	$t_{HCLK}-1.4$	$t_{HCLK}+4.8$	ns
t_{DHW}	$\overline{WR}$ de-asserted to data invalid hold time; wt_hold=0	3.4	7.4	ns
t_{DHW}	$\overline{WR}$ de-asserted to data invalid hold time; wt_hold=1	$t_{HCLK}+3.4$	$t_{HCLK}+7.4$	ns
Timing Requirement				
t_{AKW}	ACK strobe pulsewidth	10.0		ns

[1] t_{HCLK} is the peripheral clock period.

[2] These are preliminary timing parameters that are based on worst-case operating conditions.

[3] The pad loads for these timing parameters are 20 pF.

[4] EMI clock is the external port clock that is generated from the EMI clock ratio. This signal is not available on an external pin, but (roughly) corresponds to HCLK (at similar clock ratios).

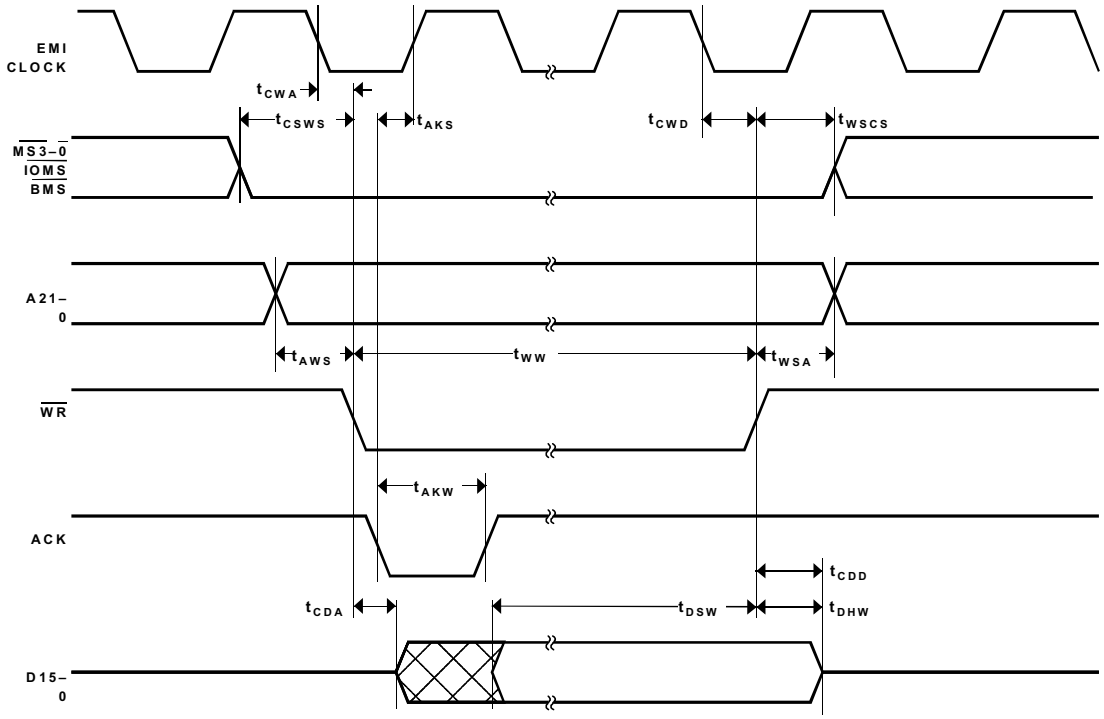

Figure 14. External Port Write Cycle Timing

This information applies to a product under development. Its characteristics and specifications are subject to change without notice. Analog Devices assumes no obligation regarding future manufacturing unless otherwise agreed to in writing.

External Port Read Cycle Timing

Table 12 and Figure 15 describe external port read operations. For additional information on the ACK signal, see the discussion on on page 28.

Table 12. External Port Read Cycle Timing

Parameter	Description[1, 2, 3]	Min	Max	Unit
Switching Characteristics				
t_{CRA}	EMI[4] clock low to $\overline{RD}$ asserted delay		2.8	ns
t_{CSRS}	Chip select asserted to $\overline{RD}$ asserted delay	4.3	6.5	ns
t_{ARS}	Address valid to $\overline{RD}$ setup and delay	4.9	7.0	ns
t_{AKS}	ACK asserted to EMI clock high delay	6.0		ns
t_{CRD}	EMI clock low to $\overline{RD}$ de-asserted delay	2.5	2.7	ns
t_{RSCS}	$\overline{RD}$ de-asserted to chip select de-asserted setup	4.8	7.0	ns
t_{RW}	$\overline{RD}$ strobe pulsewidth	$t_{HCLK}-0.5$		ns
t_{RSA}	$\overline{RD}$ de-asserted to address invalid setup	4.5	6.6	ns
Timing Requirements				
t_{AKW}	ACK strobe pulsewidth	10.0		ns
t_{CDA}	$\overline{RD}$ to data enable access delay	0.0		ns
t_{RDA}	$\overline{RD}$ asserted to data access setup		$t_{HCLK}-5.5$	ns
t_{ADA}	Address valid to data access setup		$t_{HCLK}-0.2$	ns
t_{SDA}	Chip select asserted to data access setup		$t_{HCLK}-0.6$	ns
t_{SD}	Data valid to $\overline{RD}$ de-asserted setup	1.8		ns
t_{HRD}	$\overline{RD}$ de-asserted to data invalid hold	0.0		ns

[1] t_{HCLK} is the peripheral clock period.

[2] These are preliminary timing parameters that are based on worst-case operating conditions.

[3] The pad loads for these timing parameters are 20 pF.

[4] EMI clock is the external port clock that is generated from the EMI clock ratio. This signal is not available on an external pin, but (roughly) corresponds to HCLK (at similar clock ratios).

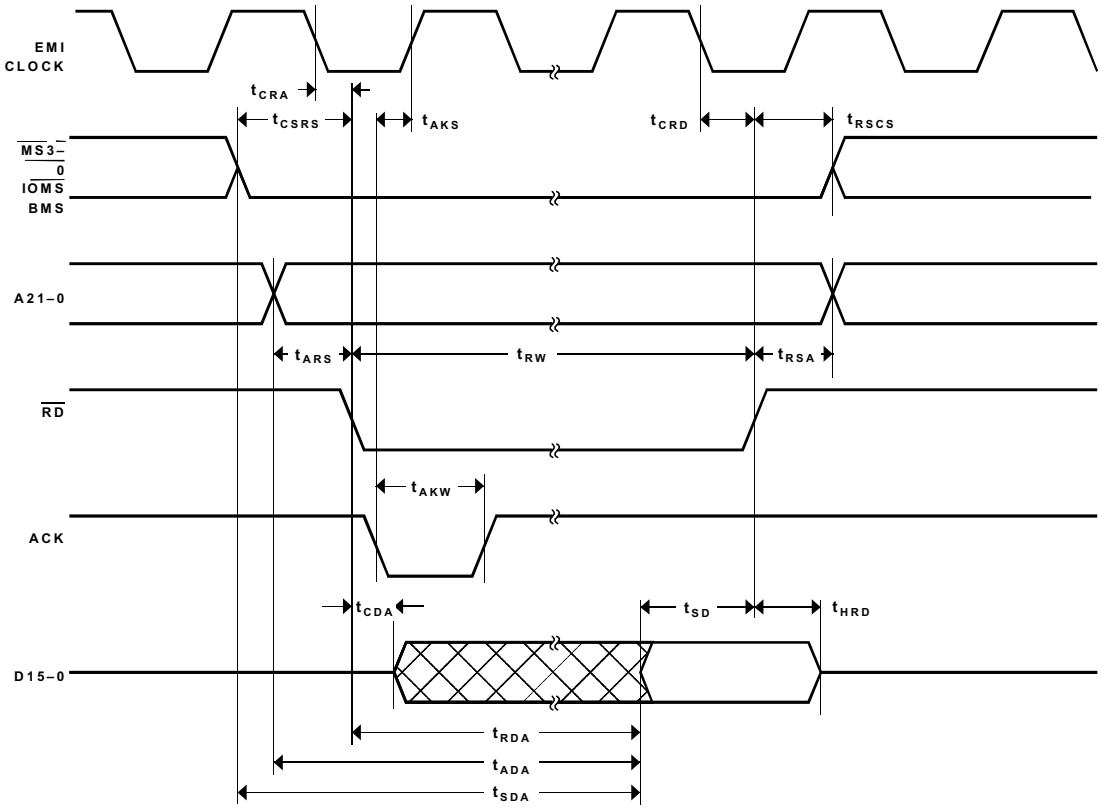

Figure 15. External Port Read Cycle Timing

This information applies to a product under development. Its characteristics and specifications are subject to change without notice. Analog Devices assumes no obligation regarding future manufacturing unless otherwise agreed to in writing.

External Port Bus Request and Grant Cycle Timing

Table 13 and Figure 16 describe external port bus request and bus grant operations.

Table 13. External Port Bus Request and Grant Cycle Timing

Parameter	Description[1, 2, 3]	Min	Max	Unit
Switching Characteristics				
t_{SD}	CLKOUT high to $\overline{xMS}$, address, and $\overline{RD}/\overline{WR}$ disable		4.3	ns
t_{SE}	CLKOUT low to $\overline{xMS}$, address, and $\overline{RD}/\overline{WR}$ enable		4.0	ns
t_{DBG}	CLKOUT high to $\overline{BG}$ asserted setup		2.2	ns
t_{EBG}	CLKOUT high to $\overline{BG}$ de-asserted hold time		2.2	ns
t_{DBH}	CLKOUT high to $\overline{BGH}$ asserted setup		2.4	ns
t_{EBH}	CLKOUT high to $\overline{BGH}$ de-asserted hold time		2.4	ns
Timing Requirements				
t_{BS}	$\overline{BR}$ asserted to CLKOUT high setup	4.6		ns
t_{BH}	CLKOUT high to $\overline{BR}$ de-asserted hold time	0.0		ns

[1] t_{HCLK} is the peripheral clock period.

[2] These are preliminary timing parameters that are based on worst-case operating conditions.

[3] The pad loads for these timing parameters are 20 pF.

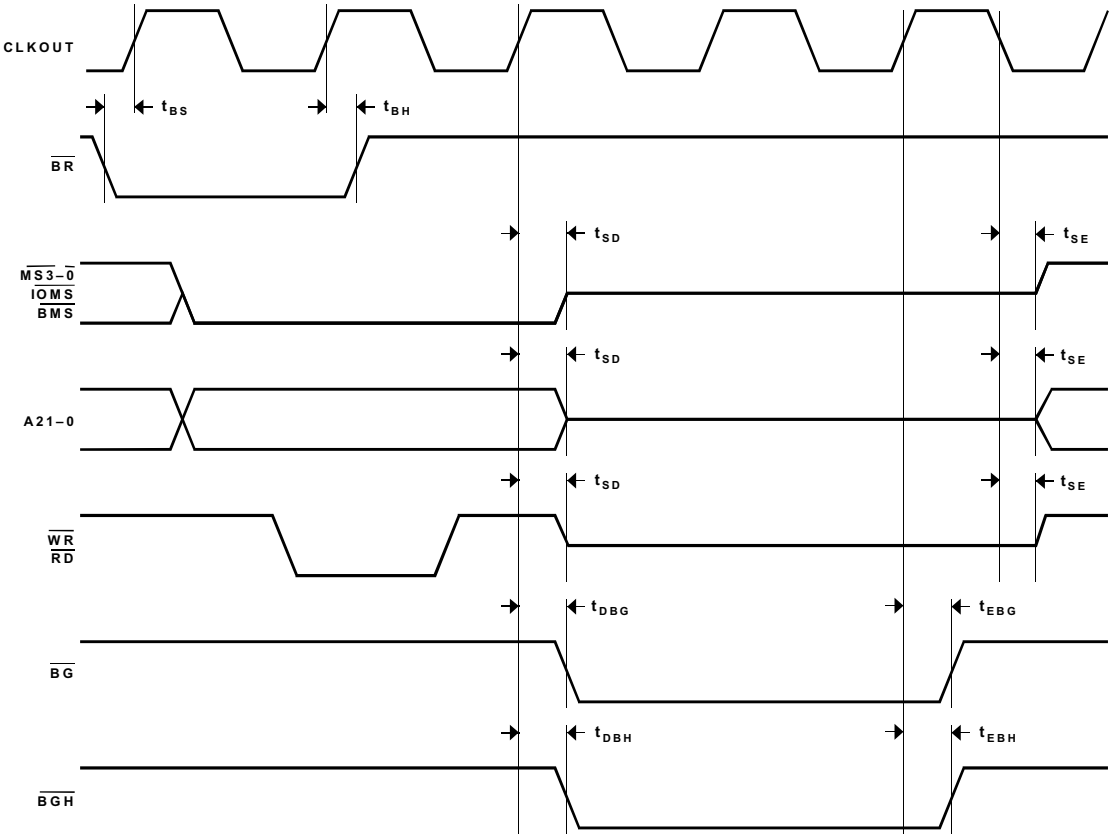

Figure 16. External Port Bus Request and Grant Cycle Timing

This information applies to a product under development. Its characteristics and specifications are subject to change without notice. Analog Devices assumes no obligation regarding future manufacturing unless otherwise agreed to in writing.

Host Port ALE Mode Write Cycle Timing

Table 14 and Figure 17 describe host port write operations in Address Latch Enable (ALE) mode. For more information on ACK, Ready, ALE, and ACC mode selection, see the Host port modes description on page 10.

Table 14. Host Port ALE Mode Write Cycle Timing

Parameter	Description	Min	Max	Unit
Switching Characteristics				
t_{WHKS}	$\overline{HWR}$ asserted to HACK asserted (setup, ACK Mode)	0.6	$0.6+t_{NH}$[1]	ns
t_{WHKH}	$\overline{HWR}$ de-asserted to HACK de-asserted (hold, ACK Mode)		2	ns
t_{WHS}	$\overline{HWR}$ asserted to HACK asserted (setup, Ready Mode)		0.6	ns
t_{WHH}	$\overline{HWR}$ asserted to HACK de-asserted (hold, Ready Mode)		$2+t_{NH}$[1]	ns
Timing Requirements				
t_{CSAL}	$\overline{HCMS}$ or $\overline{HCIOMS}$ asserted to HALE asserted	0		ns
t_{ALPW}	HALE asserted pulsewidth	4		ns
t_{ALCSW}	HALE de-asserted to $\overline{HCMS}$ or $\overline{HCIOMS}$ de-asserted	1		ns
t_{WCSW}	$\overline{HWR}$ de-asserted to $\overline{HCMS}$ or $\overline{HCIOMS}$ de-asserted	1		ns
t_{ALW}	HALE de-asserted to $\overline{HWR}$ asserted	1		ns
t_{WCS}	$\overline{HWR}$ de-asserted (after last byte) to $\overline{HCMS}$ or $\overline{HCIOMS}$ de-asserted (ready for next write)	1		ns
t_{HKWD}	HACK asserted to $\overline{HWR}$ de-asserted (hold, ACK Mode)	1.5		ns
t_{AALS}	Address valid to HALE de-asserted (setup)	4		ns
t_{ALAH}	HALE de-asserted to address invalid (hold)	1.5		ns
t_{DWS}	Data valid to $\overline{HWR}$ de-asserted (setup)	4		ns
t_{WDH}	$\overline{HWR}$ de-asserted to data invalid (hold)	1		ns

[1] t_{NH} are peripheral bus latencies ($n \times t_{HCLK}$); these are internal DSP latencies related to the number of peripherals attempting to access DSP memory at the same time.

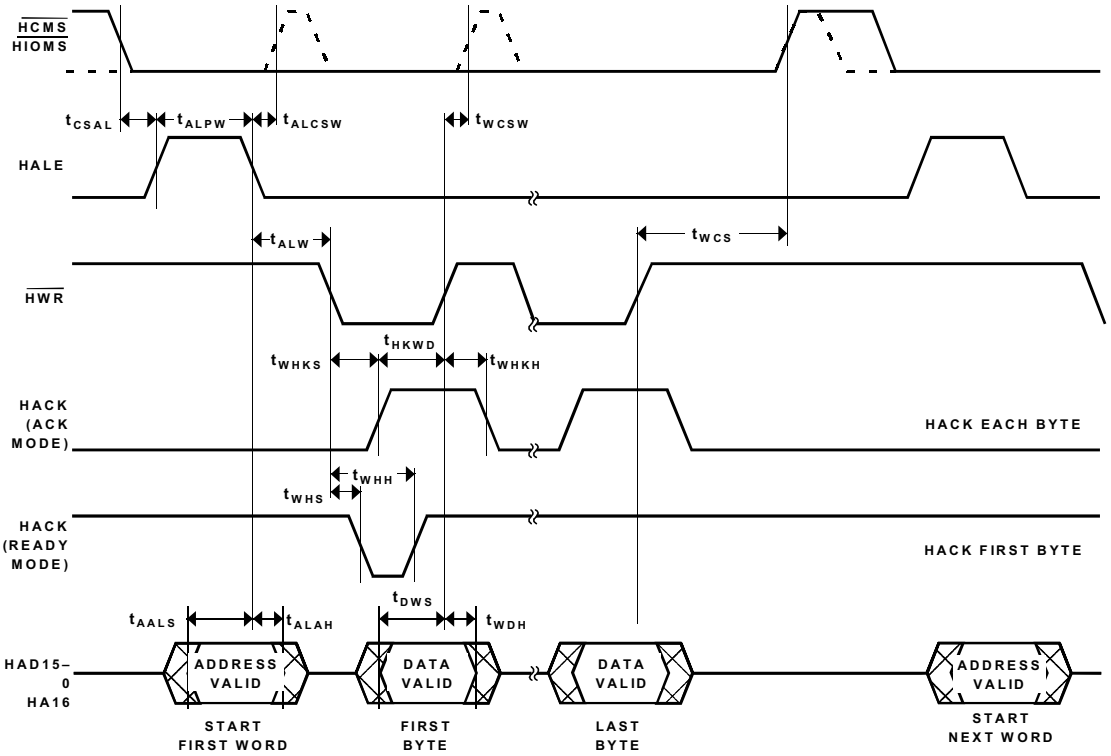

Figure 17. Host Port ALE Mode Write Cycle Timing

This information applies to a product under development. Its characteristics and specifications are subject to change without notice. Analog Devices assumes no obligation regarding future manufacturing unless otherwise agreed to in writing.

Host Port ACC Mode Write Cycle Timing

Table 15 and Figure 18 describe host port write operations in Address Cycle Control (ACC) mode. For more information on ACK, Ready, ALE, and ACC mode selection, see the Host port modes description on page 10.

Table 15. Host Port ACC Mode Write Cycle Timing

Parameter	Description	Min	Max	Unit
Switching Characteristics				
t_{WHKS}	$\overline{HWR}$ asserted to HACK asserted (setup, ACK Mode)	0.6	$0.6+t_{NH}$[1]	ns
t_{WHKH}	$\overline{HWR}$ de-asserted to HACK de-asserted (hold, ACK Mode)		2	ns
t_{WHS}	$\overline{HWR}$ asserted to HACK asserted (setup, Ready Mode)		0.6	ns
t_{WHH}	$\overline{HWR}$ asserted to HACK de-asserted (hold, Ready Mode)		$2+t_{NH}$[1]	ns
Timing Requirements				
t_{WAL}	$\overline{HWR}$ asserted to HALE de-asserted (delay)	1.5		ns
t_{CSAL}	$\overline{HCMS}$ or $\overline{HCIOMS}$ asserted to HALE asserted (delay)	0		ns
t_{ALCS}	HALE de-asserted to optional $\overline{HCMS}$ or $\overline{HCIOMS}$ de-asserted	1		ns
t_{WCSW}	$\overline{HWR}$ de-asserted to $\overline{HCMS}$ or $\overline{HCIOMS}$ de-asserted	1		ns
t_{ALW}	HALE asserted to HWR asserted	0.5		ns
t_{CSW}	$\overline{HCMS}$ or $\overline{HCIOMS}$ asserted to $\overline{HWR}$ asserted	1	2	ns
t_{WCS}	$\overline{HWR}$ de-asserted (after last byte) to $\overline{HCMS}$ or $\overline{HCIOMS}$ de-asserted (ready for next write)	1		ns
t_{ALEW}	HALE de-asserted to HWR asserted	1		ns
t_{HKWD}	HACK asserted to $\overline{HWR}$ de-asserted (hold, ACK Mode)	1.5		ns
t_{ADW}	Address valid to $\overline{HWR}$ asserted (setup)	4		ns
t_{WAD}	$\overline{HWR}$ de-asserted to address invalid (hold)	1		ns
t_{DWS}	Data valid to $\overline{HWR}$ de-asserted (setup)	4		ns
t_{WDH}	$\overline{HWR}$ de-asserted to data invalid (hold)	1		ns

[1] t_{NH} are peripheral bus latencies ($n \times t_{HCLK}$); these are internal DSP latencies related to the number of peripherals attempting to access DSP memory at the same time.

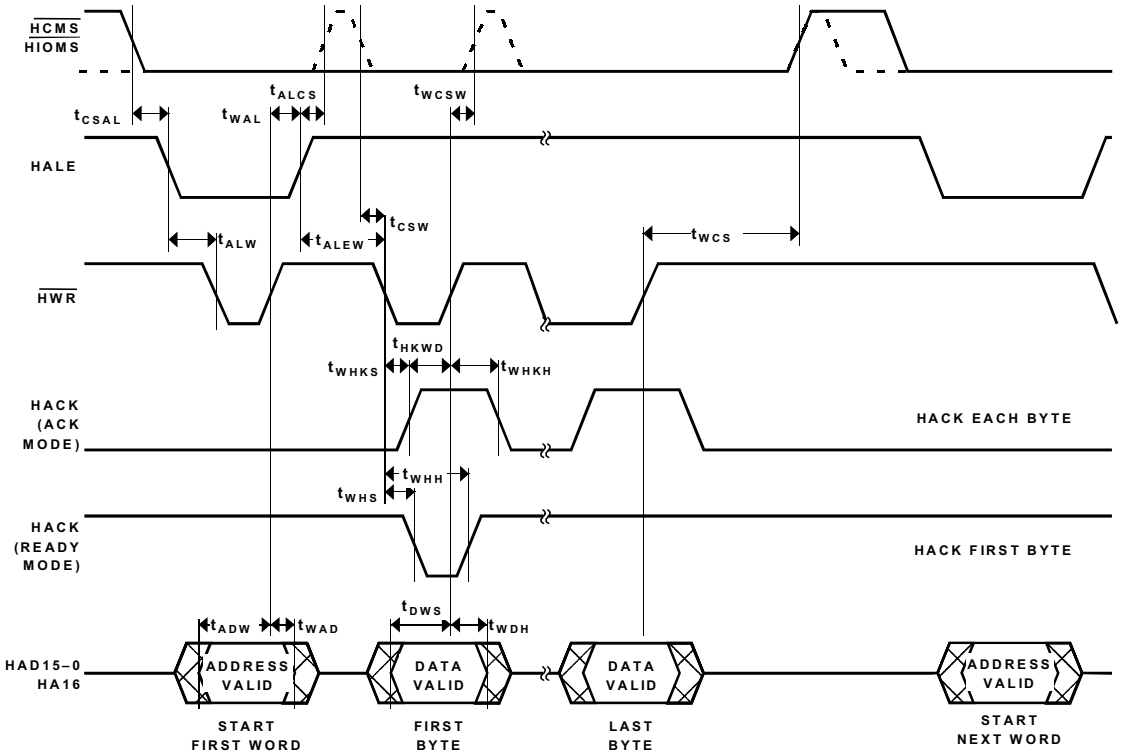

Figure 18. Host Port ACC Mode Write Cycle Timing

This information applies to a product under development. Its characteristics and specifications are subject to change without notice. Analog Devices assumes no obligation regarding future manufacturing unless otherwise agreed to in writing.

Host Port ALE Mode Read Cycle Timing

Table 16 and Figure 19 describe host port read operations in Address Latch Enable (ALE) mode. For more information on ACK, Ready, ALE, and ACC mode selection, see the Host port modes description on page 10.

Table 16. Host Port ALE Mode Read Cycle Timing

Parameter	Description	Min	Max	Unit
Switching Characteristics				
t_{RHKS}	$\overline{HRD}$ asserted to HACK asserted (setup, ACK Mode)	2	$2+t_{NH}$[1]	ns
t_{RHKH}	$\overline{HRD}$ de-asserted to HACK de-asserted (hold, ACK Mode)		2	ns
t_{RHS}	$\overline{HRD}$ asserted to HACK asserted (setup, Ready Mode)		2	ns
t_{RHH}	$\overline{HRD}$ asserted to HACK de-asserted (hold, Ready Mode)		$2+t_{NH}$[1]	ns
Timing Requirements				
t_{CSAL}	$\overline{HCMS}$ or $\overline{HCIOMS}$ asserted to HALE asserted (delay)	0		ns
t_{ALCS}	HALE de-asserted to optional $\overline{HCMS}$ or $\overline{HCIOMS}$ de-asserted	1		ns
t_{RCSW}	$\overline{HRD}$ de-asserted to $\overline{HCMS}$ or $\overline{HCIOMS}$ de-asserted	1		ns
t_{ALR}	HALE de-asserted to $\overline{HRD}$ asserted	1		ns
t_{RCS}	$\overline{HRD}$ de-asserted (after last byte) to $\overline{HCMS}$ or $\overline{HCIOMS}$ de-asserted (ready for next read)	1		ns
t_{ALPW}	HALE asserted pulsewidth	4		ns
t_{HKRD}	HACK asserted to $\overline{HRD}$ de-asserted (hold, ACK Mode)	1.5		ns
t_{AALS}	Address valid to HALE de-asserted (setup)	4		ns
t_{ALAH}	HALE de-asserted to address invalid (hold)	1		ns
t_{RDH}	$\overline{HRD}$ de-asserted to data invalid (hold)	1		ns

[1] t_{NH} are peripheral bus latencies ($n \times t_{HCLK}$); these are internal DSP latencies related to the number of peripherals attempting to access DSP memory at the same time.

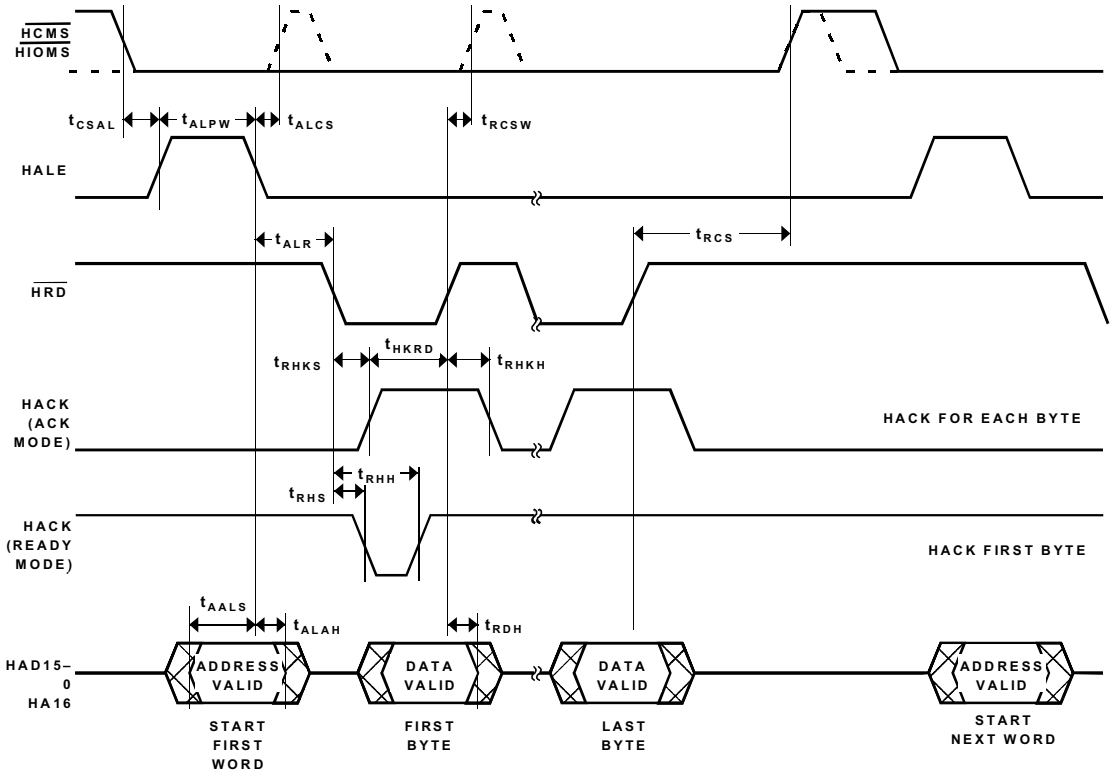

Figure 19. Host Port ALE Mode Read Cycle TIming

This information applies to a product under development. Its characteristics and specifications are subject to change without notice. Analog Devices assumes no obligation regarding future manufacturing unless otherwise agreed to in writing.

Host Port ACC Mode Read Cycle Timing

Table 17 and Figure 20 describe host port read operations in Address Cycle Control (ACC) mode. For more information on ACK, Ready, ALE, and ACC mode selection, see the Host port modes description on page 10.

Table 17. Host Port ACC Mode Read Cycle Timing

Parameter	Description	Min	Max	Unit
Switching Characteristics				
t_{RHKS}	$\overline{HRD}$ asserted to HACK asserted (setup, ACK Mode)	1	$1+t_{NH}$[1]	ns
t_{RHKH}	$\overline{HRD}$ de-asserted to HACK de-asserted (hold, ACK Mode)		2	ns
t_{RHS}	$\overline{HRD}$ asserted to HACK asserted (setup, Ready Mode)		1	ns
t_{RHH}	$\overline{HRD}$ asserted to HACK de-asserted (hold, Ready Mode)		$2+t_{NH}$[1]	ns
Timing Requirements				
t_{CSAL}	$\overline{HCMS}$ or $\overline{HCIOMS}$ asserted to HALE asserted (delay)	0		ns
t_{ALCS}	HALE de-asserted to optional $\overline{HCMS}$ or $\overline{HCIOMS}$ de-asserted	1		ns
t_{RCSW}	$\overline{HRD}$ de-asserted to $\overline{HCMS}$ or $\overline{HCIOMS}$ de-asserted	1		ns
t_{ALW}	HALE asserted to HWR asserted	0.5		ns
t_{ALER}	HALE de-asserted to HWR asserted	1		ns
t_{CSR}	$\overline{HCMS}$ or $\overline{HCIOMS}$ asserted to $\overline{HRD}$ asserted	1	2	ns
t_{RCS}	$\overline{HRD}$ de-asserted (after last byte) to $\overline{HCMS}$ or $\overline{HCIOMS}$ de-asserted (ready for next read)	1		ns
t_{WAL}	HWR de-asserted to HALE de-asserted (delay)	1.5		ns
t_{HKRD}	HACK asserted to $\overline{HRD}$ de-asserted (hold, ACK Mode)	1.5		ns
t_{ADW}	Address valid to $\overline{HWR}$ de-asserted (setup)	4		ns
t_{WAD}	$\overline{HWR}$ de-asserted to address invalid (hold)	1		ns
t_{RDH}	$\overline{HRD}$ de-asserted to data invalid (hold)	1		ns

[1] t_{NH} are peripheral bus latencies ($n \times t_{HCLK}$); these are internal DSP latencies related to the number of peripherals attempting to access DSP memory at the same time.

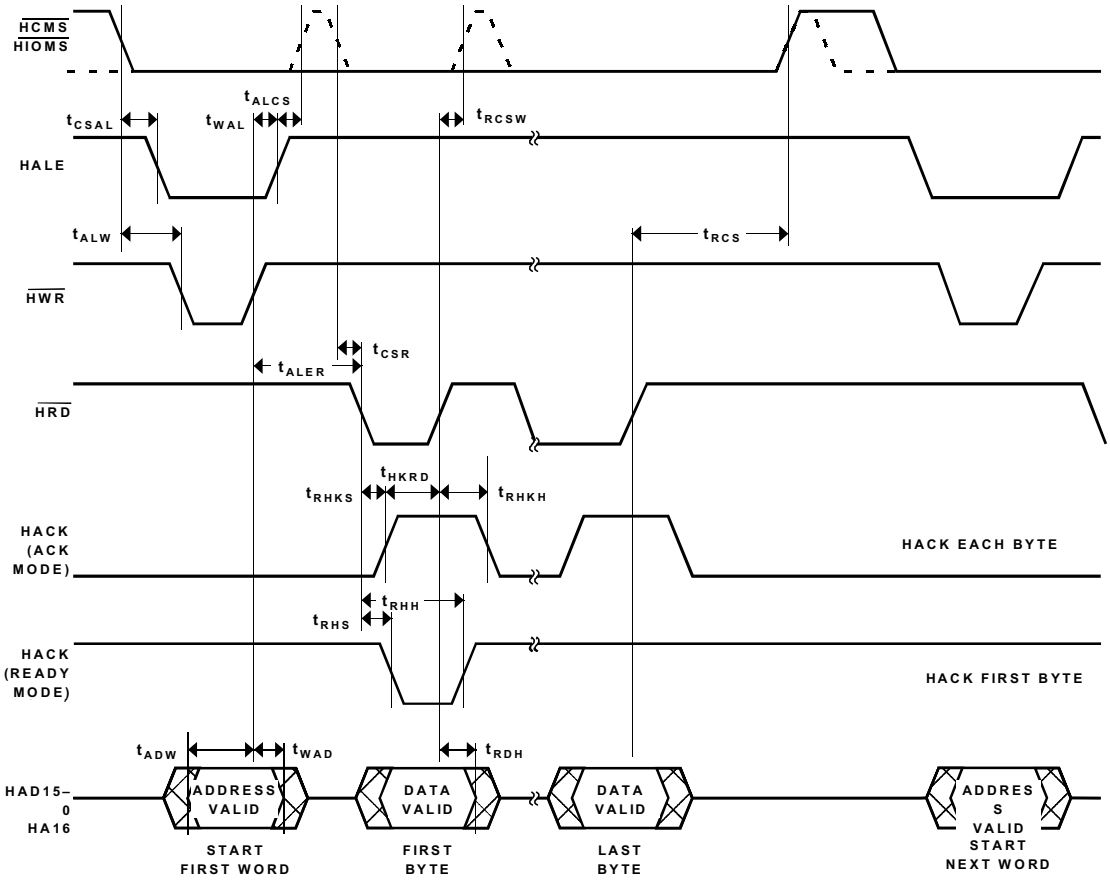

Figure 20. Host Port ACC Mode Read Cycle TIming

This information applies to a product under development. Its characteristics and specifications are subject to change without notice. Analog Devices assumes no obligation regarding future manufacturing unless otherwise agreed to in writing.

Serial Port (SPORT) Clocks and Data Timing

Table 18 and Figure 21 describe SPORT transmit and receive operations.

Table 18. Serial Port (SPORT) Clocks and Data Timing[1]

Parameter	Description	Min	Max	Unit
Switching Characteristics				
t_{HOFSE}	RFS Hold after RCLK (Internally Generated RFS)[2]	0	12.4	ns
t_{DFSE}	RFS Delay after RCLK (Internally Generated RFS)[2]	0	12.4	ns
t_{DDTEN}	Transmit Data Delay after TCLK[2]	0	12.1	ns
t_{DDTTE}	Data Disable from External TCLK[2]	0	12.0	ns
t_{DDTIN}	Data Enable from Internal TCLK[2]	0	6.8	ns
t_{DDTTI}	Data Disable from Internal TCLK[2]	0	6.3	ns
Timing Requirements				
t_{SCLKIW}	TCLK/RCLK Width	20		ns
t_{SFSI}	TFS/RFS Setup before TCLK/RCLK[3]	–0.6		ns
t_{HFSI}	TFS/RFS Hold after TCLK/RCLK[3, 4]	–0.3		ns
t_{SDRI}	Receive Data Setup before RCLK[3]	–2.3		ns
t_{HDRI}	Receive Data Hold after RCLK[3]	1.9		ns
t_{SCLKW}	TCLK/RCLK Width	20		ns
t_{SFSE}	TFS/RFS Setup before TCLK/RCLK[3]	–0.6		ns
t_{HFSE}	TFS/RFS Hold after TCLK/RCLK[3, 4]	–0.6		ns
t_{SDRE}	Receive Data Setup before RCLK[3]	–2.2		ns
t_{HDRE}	Receive Data Hold after RCLK[3]	1.8		ns

[1]To determine whether communication is possible between two devices at clock speed n, the following specifications must be confirmed: 1) frame sync delay and frame sync setup and hold, 2) data delay and data setup and hold, and 3) SCLK width.

[2]Referenced to drive edge.

[3]Referenced to sample edge.

[4]RFS hold after RCLK when MCE = 1, MFD = 0 is 0 ns minimum from drive edge. TFS hold after TCLK for late external TFS is 0 ns minimum from drive edge.

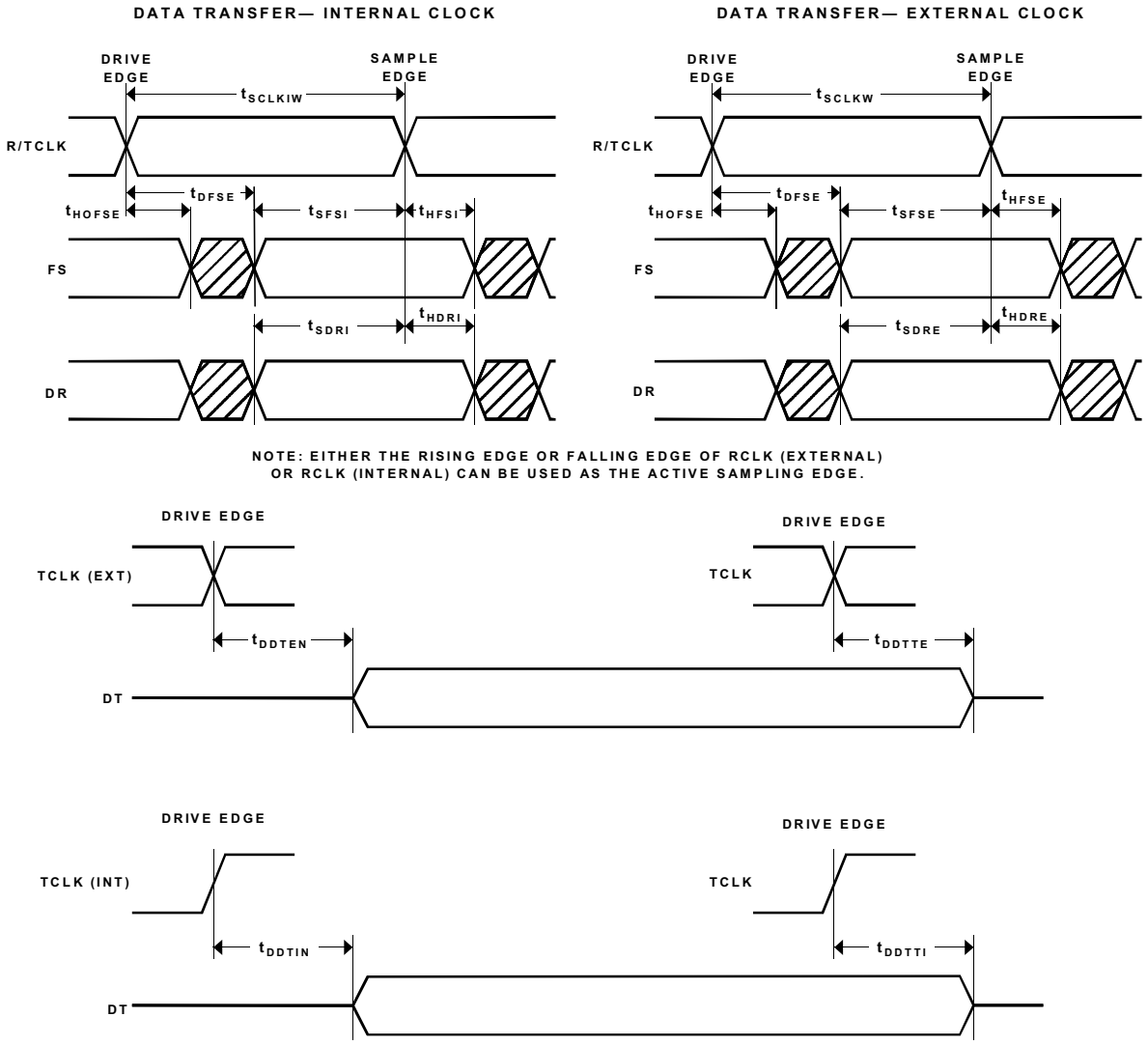

Figure 21. Serial Port (SPORT) Clocks and Data

This information applies to a product under development. Its characteristics and specifications are subject to change without notice. Analog Devices assumes no obligation regarding future manufacturing unless otherwise agreed to in writing.

Serial Port (SPORT) Frame Synch Timing

Table 19 and Figure 22 describe SPORT frame synch operations.

To determine whether communication is possible between two devices at clock speed n, the following specifications must be confirmed: 1) frame sync delay and frame sync setup and hold, 2) data delay and data setup and hold, and 3) R/TCLK width.

Table 19. Serial Port (SPORT) Frame Synch Timing

Parameter	Description	Min	Max	Unit
Switching Characteristics				
t_{HOFSE}	RFS Hold after RCLK (Internally Generated RFS)[1]		12.4	ns
t_{HOFSI}	TFS Hold after TCLK (Internally Generated TFS)[1]		12.2	ns
$t_{DDTENFS}$	Data Enable from late FS or MCE = 1, MFD = 0[2]		4.7	ns
$t_{DDTLFSE}$	Data Delay from Late External TFS or External RFS with MCE = 1, MFD = 0[3]		4.7	ns
t_{HDTE}	Transmit Data Hold after TCLK (external clk)[1]		12.4	ns
t_{HDTI}	Transmit Data Hold after TCLK (internal clk)[1]	0	12.2	ns
t_{DDTE}	Transmit Data Delay after TCLK (external clk)[1]	0	12.2	ns
t_{DDTI}	Transmit Data Delay after TCLK (internal clk)[1]	0	11.1	ns
Timing Requirements				
t_{SFSE}	TFS/RFS Setup before TCLK/RCLK (external clk)[3]	–0.6	TBD	ns
t_{SFSI}	TFS/RFS Setup before TCLK/RCLK (internal clk)[3]	–0.6	TBD	ns

[1]Referenced to drive edge.

[2]MCE = 1, TFS enable and TFS valid follow $t_{DDTLFSE}$ and $t_{DDTENFS}$.

[3]Referenced to sample edge.

This information applies to a product under development. Its characteristics and specifications are subject to change without notice. Analog Devices assumes no obligation regarding future manufacturing unless otherwise agreed to in writing.

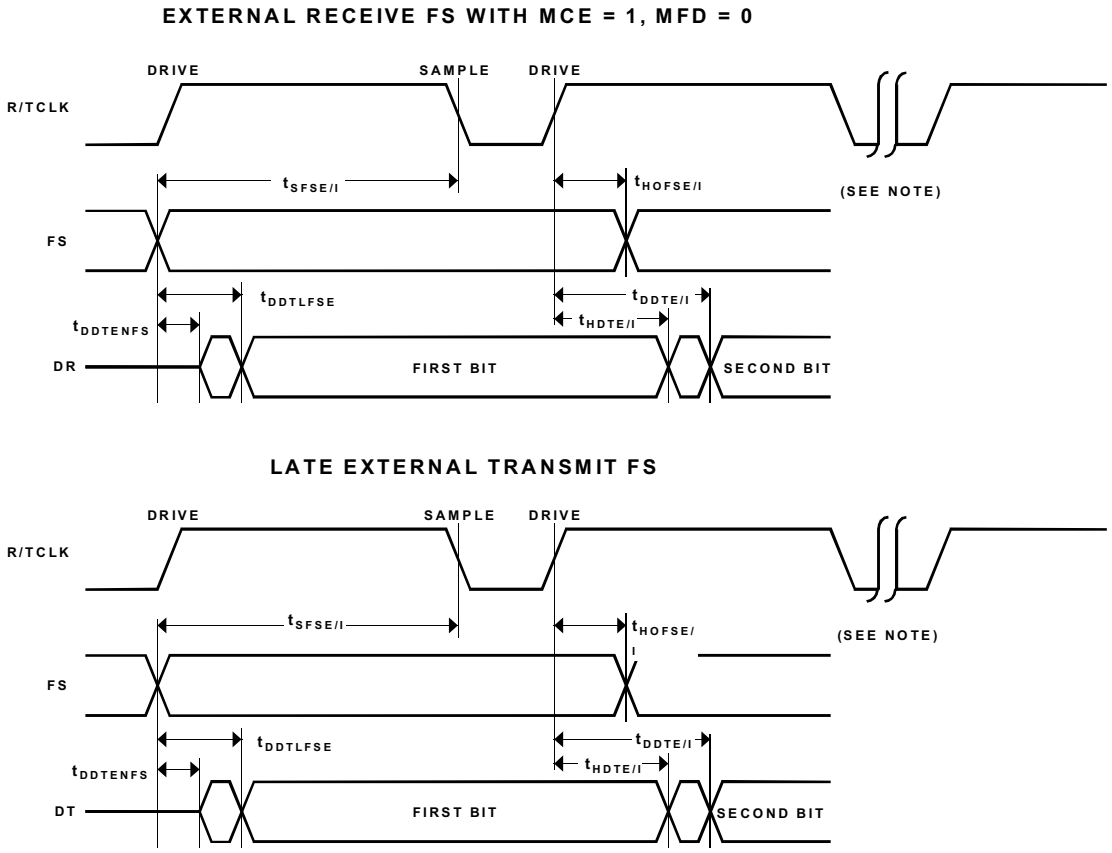

Figure 22. Serial Port (SPORT) Frame Synch

This information applies to a product under development. Its characteristics and specifications are subject to change without notice. Analog Devices assumes no obligation regarding future manufacturing unless otherwise agreed to in writing.

Serial Peripheral Interface (SPI) Port—Master Timing

Table 20 and Figure 23 describe SPI port master operations.

Table 20. Serial Peripheral Interface (SPI) Port—Master Timing

Parameter	Description	Min	Max	Unit
Switching Characteristics				
t_{SDSCIM}	$\overline{SPIxSEL}$ low to first SCLK edge (x=0 or 1)	$2t_{HCLK}$		ns
t_{SPICHM}	Serial clock high period	$2t_{HCLK}$		ns
t_{SPICLM}	Serial clock low period	$2t_{HCLK}$		ns
t_{SPICLK}	Serial clock period	$4t_{HCLK}$		ns
t_{HDSM}	Last SCLK edge to $\overline{SPIxSEL}$ high (x=0 or 1)	$2t_{HCLK}$		ns
t_{SPITDM}	Sequential transfer delay	$2t_{HCLK}$		ns
t_{DDSPID}	SCLK edge to data out valid (data out delay)	0	6	ns
t_{HDSPID}	SCLK edge to data out invalid (data out hold)	0	5	ns
Timing Requirements				
t_{SSPID}	Data input valid to SCLK edge (data input setup)	1.6		ns
t_{HSPID}	SCLK sampling edge to data input invalid	1.6		ns

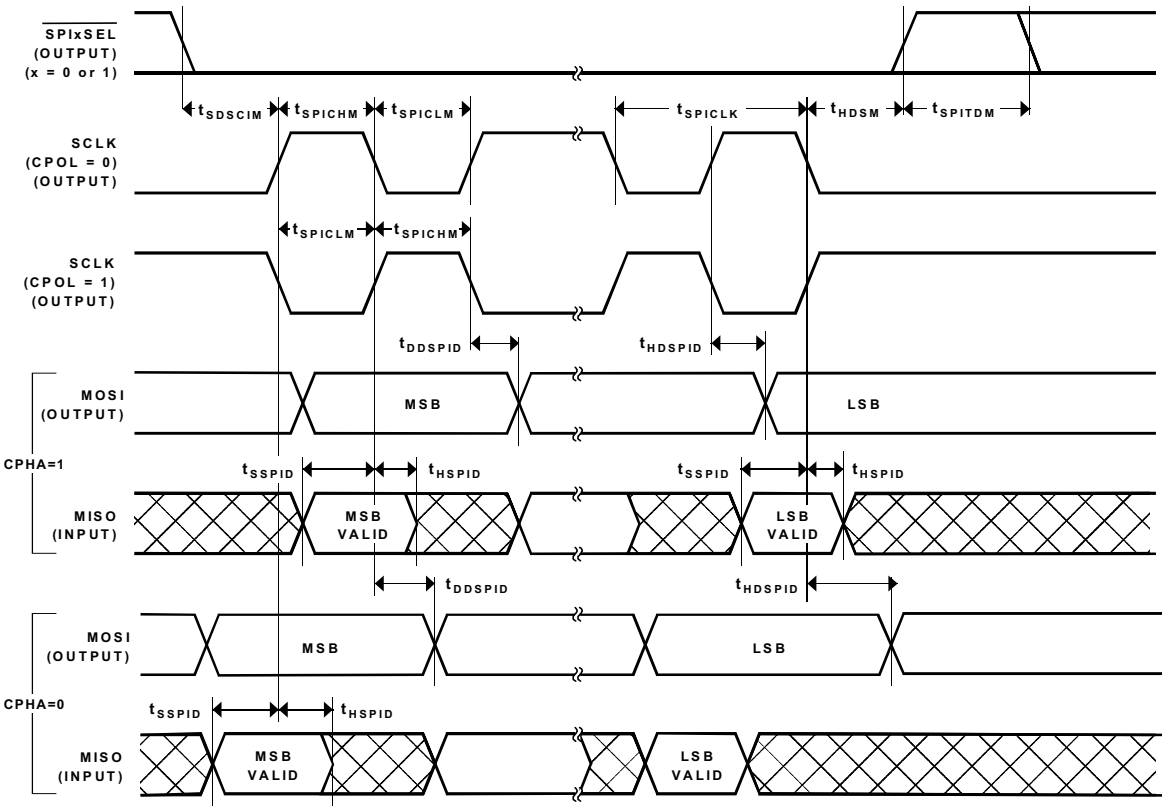

Figure 23. Serial Peripheral Interface (SPI) Port—Master

This information applies to a product under development. Its characteristics and specifications are subject to change without notice. Analog Devices assumes no obligation regarding future manufacturing unless otherwise agreed to in writing.

Serial Peripheral Interface (SPI) Port—Slave Timing

Table 21 and Figure 24 describe SPI port slave operations.

Table 21. Serial Peripheral Interface (SPI) Port—Slave Timing

Parameter	Description	Min	Max	Unit
Switching Characteristics				
t_{DSOE}	$\overline{SPISS}$ assertion to data out active	0	6	ns
t_{DSDHI}	$\overline{SPISS}$ deassertion to data high impedance	0	6	ns
t_{DDSPID}	SCLK edge to data out valid (data out delay)	0	5	ns
t_{HDSPID}	SCLK edge to data out invalid (data out hold)	0	5	ns
Timing Requirements				
t_{SPICHS}	Serial clock high period	$2t_{HCLK}$		ns
t_{SPICLS}	Serial clock low period	$2t_{HCLK}$		ns
t_{SPICLK}	Serial clock period	$4t_{HCLK}$		ns
t_{HDS}	Last SPICLK edge to $\overline{SPISS}$ not asserted	$2t_{HCLK}$		ns
t_{SPITDS}	Sequential Transfer Delay	$2t_{HCLK}$		ns
t_{SDSCI}	$\overline{SPISS}$ assertion to first SPICLK edge	$2t_{HCLK}$		ns
t_{SSPID}	Data input valid to SCLK edge (data input setup)	1.6		ns
t_{HSPID}	SCLK sampling edge to data input invalid	1.6		ns

This information applies to a product under development. Its characteristics and specifications are subject to change without notice. Analog Devices assumes no obligation regarding future manufacturing unless otherwise agreed to in writing.

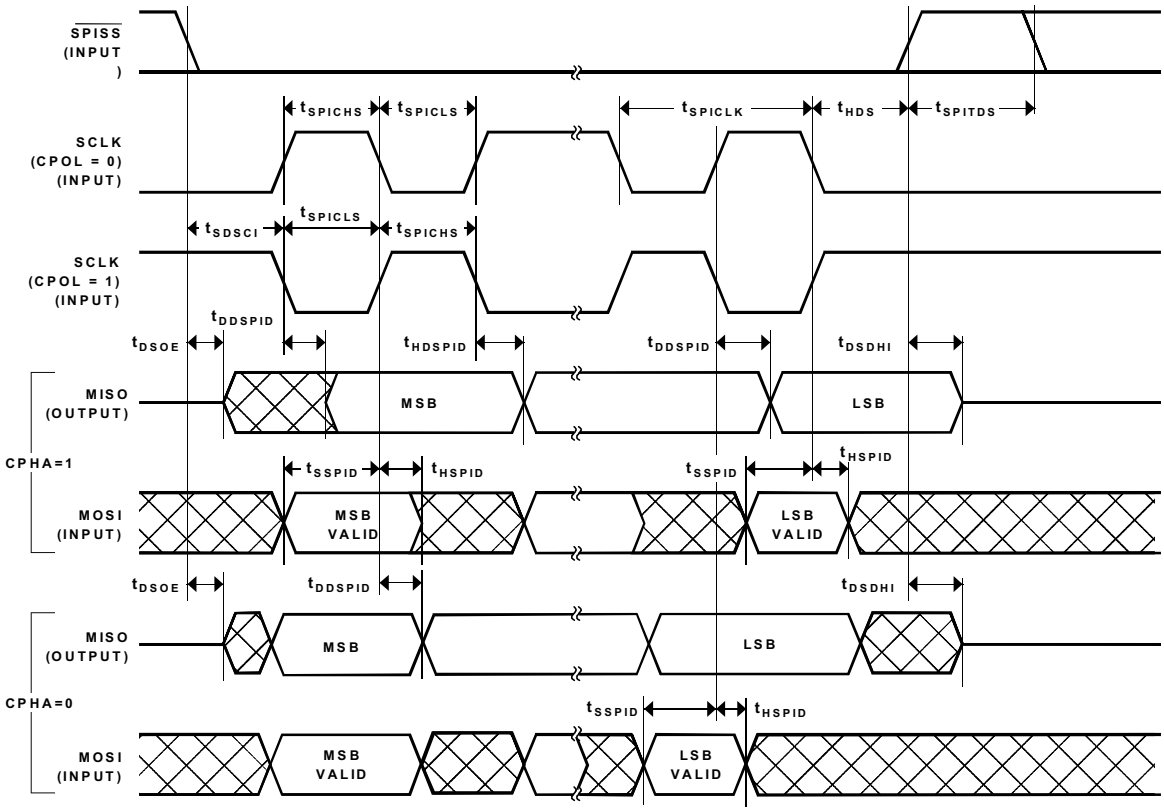

Figure 24. Serial Peripheral Interface (SPI) Port—Slave

This information applies to a product under development. Its characteristics and specifications are subject to change without notice. Analog Devices assumes no obligation regarding future manufacturing unless otherwise agreed to in writing.

Universal Asynchronous Receiver-Transmitter (UART) Port—Receive and Transmit Timing

Figure 25 describes UART port receive and transmit operations. The maximum baud rate is HCLK/16. As shown in Figure 25 there is some latency between the generation internal UART interrupts and the external data operations. These latencies are negligible at the data transmission rates for the UART.

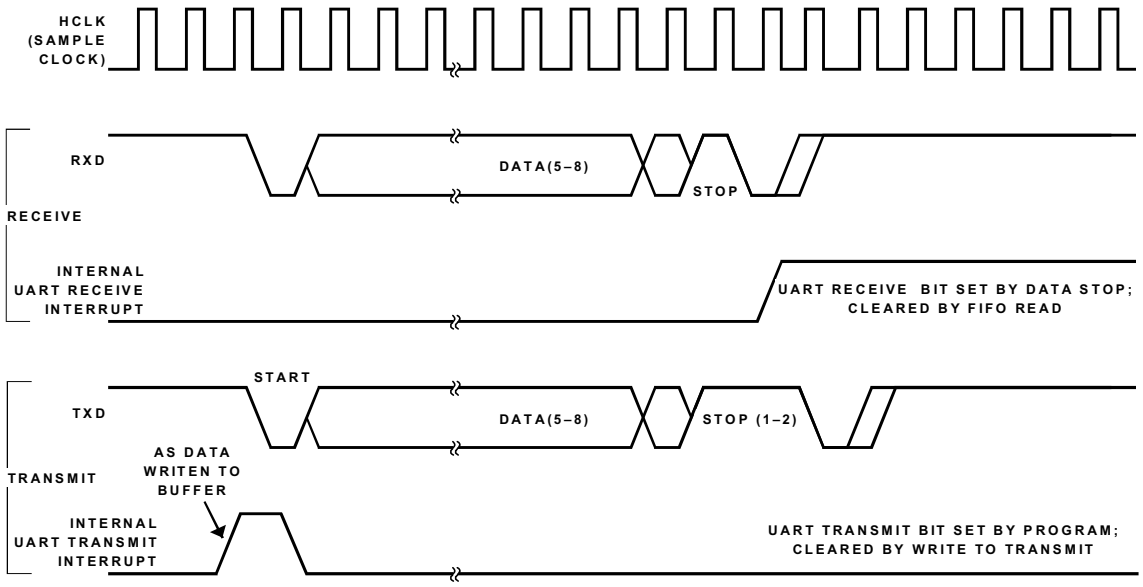

Figure 25. UART Port—Receive and Transmit Timing

JTAG Test And Emulation Port Timing

Table 22 and Figure 26 describe JTAG port operations.

Table 22. JTAG Port Timing

Parameter	Description	Min	Max	Unit
Switching Characteristics				
t_{DTDO}	TDO Delay from TCK Low		4	ns
t_{DSYS}	System Outputs Delay After TCK Low[1]	0	5	ns
Timing Parameters				
t_{TCK}	TCK Period	20		ns
t_{STAP}	TDI, TMS Setup Before TCK High		4	ns
t_{HTAP}	TDI, TMS Hold After TCK High		4	ns
t_{SSYS}	System Inputs Setup Before TCK Low[2]		4	ns
t_{HSYS}	System Inputs Hold After TCK Low[2]		5	ns
t_{TRSTW}	$\overline{TRST}$ Pulsewidth[3]	4		ns

[1]System Outputs = DATA15–0, ADDR21–0, $\overline{MS3–0}$, $\overline{RD}$, $\overline{WR}$, ACK, CLKOUT, $\overline{BG}$, PF7–0, TIMEXP, DT0, DT1, TCLK0, TCLK1, RCLK0, RCLK1, TFS0, TFS1, RFS0, RFS1, $\overline{BMS}$.

[2]System Inputs = DATA15–0, ADDR21–0, $\overline{RD}$, $\overline{WR}$, ACK, $\overline{BR}$, $\overline{BG}$, PF7–0, DR0, DR1, TCLK0, TCLK1, RCLK0, RCLK1, TFS0, TFS1, RFS0, RFS1, CLKIN, $\overline{RESET}$.

[3]50 MHz max.

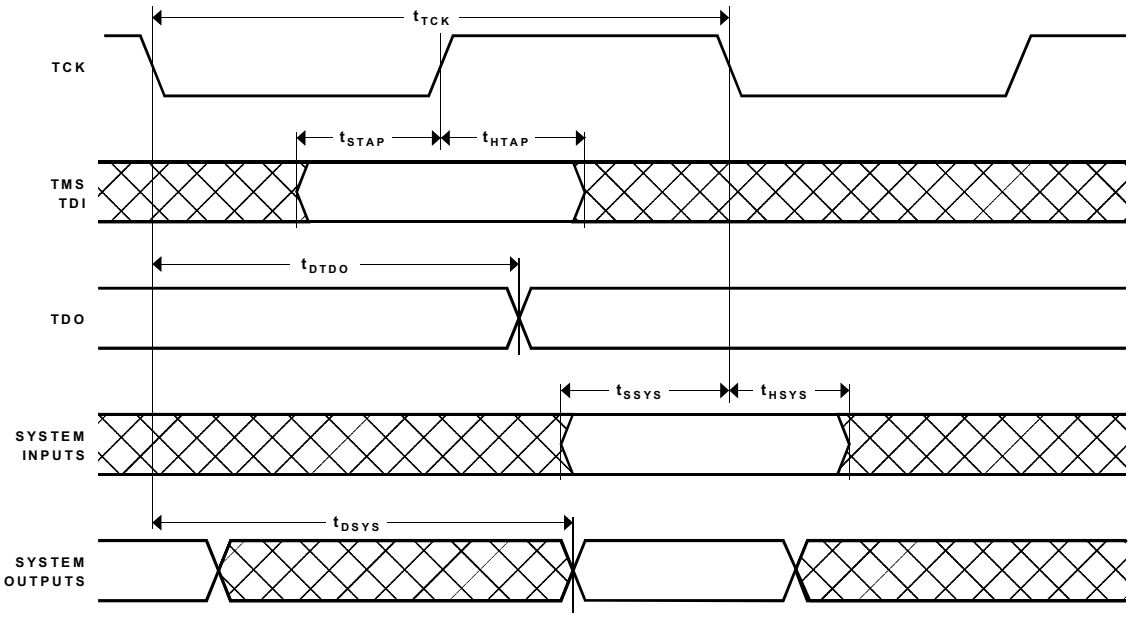

Figure 26. JTAG Port Timing

This information applies to a product under development. Its characteristics and specifications are subject to change without notice. Analog Devices assumes no obligation regarding future manufacturing unless otherwise agreed to in writing.

Output Drive Currents

Figure 27 shows typical I-V characteristics for the output drivers of the ADSP-2196. The curves represent the current drive capability of the output drivers as a function of output voltage.

Power Dissipation

Total power dissipation has two components, one due to internal circuitry and one due to the switching of external output drivers. Internal power dissipation is dependent on the instruction execution sequence and the data operands involved. Using the current-versus-operation information in Table 23, designers can estimate the ADSP-2196's internal power supply (V_{DDINT}) input current for a specific application, according to the formula in Figure 28.

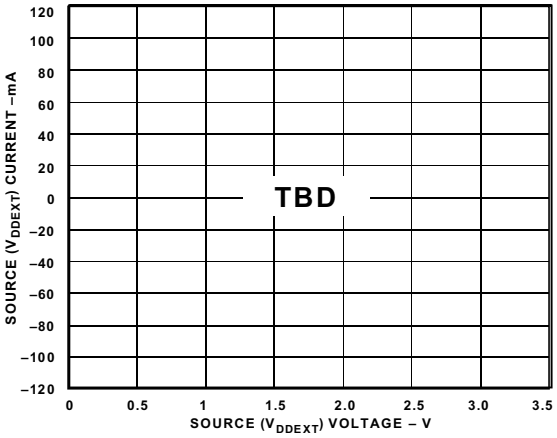

Figure 27. ADSP-2196 Typical Drive Currents

Table 23. ADSP-2196 Operation Types Versus Input Current

Activity	I_{DD}(mA)[1] CCLK = 80 MHz		I_{DD} (mA)[1] CCLK = 160 MHz	
	Core	Peripheral	Core	Peripheral
Power down[2]	0	0	0	0
Idle 1[3]	0	3	0	5
Idle 2[4]	0	30	0	60
Typical[5]	95	30	184	60
Peak[6]	112	30	215	60

[1]Test conditions: V_{DD}= 2.50 V; HCLK (peripheral clock) frequency = CCLK/2 (core clock/2) frequency; T_{AMB} = 25 °C.

[2]PLL, Core, peripheral clocks, and CLKIN are disabled.

[3]PLL is enabled and Core and peripheral clocks are disabled.

[4]Core CLK is disabled and peripheral clock is enabled. This is a power- down interrupt mode. The timer can be used to generate an interrupt to enable the Core clock.

[5]All instructions execute from internal memory. 100% of the instructions are MAC with dual operand addressing, with changing data fetched using a linear address sequence, and 50% of the instructions move data from PM to a data register.

[6]All instructions execute from internal memory. 50% of the instructions are repeat MACs with dual operand addressing, with changing data fetched using a linear address sequence.

$$I_{DDINT} = (\%Peak \times I_{DD\text{-}PEAK}) + \%Typical \times I_{DD\text{-}TYPICAL}) + (\%Idle \times I_{DD\text{-}IDLE}) + (\%Powerdown \times I_{DD\text{-}PWRDWN})$$

Figure 28. I_{DDINT} Calculation

The external component of total power dissipation is caused by the switching of output pins. Its magnitude depends on:

- The number of output pins that switch during each cycle (O)
- The maximum frequency at which they can switch (f)
- Their load capacitance (C)
- Their voltage swing (V_{DD})

and is calculated by the formula in Figure 29.

$$P_{EXT} = O \times C \times V_{DD}^{2} \times f$$

Figure 29. P_{EXT} Calculation

The load capacitance should include the processor's package capacitance (C_{IN}). The switching frequency includes driving the load high and then back low. Address and data pins can drive high and low at a maximum rate of $1/(2t_{CK})$. The write strobe can switch every cycle at a frequency of $1/t_{CK}$. Select pins switch at $1/(2t_{CK})$, but selects can switch on each cycle. For example, estimate P_{EXT} with the following assumptions:

- A system with one bank of external data memory—asynchronous RAM (16-bit)
- One 64K×16 RAM chip is used, each with a load of 10 pF
- Maximum peripheral speed HCLK = 100 MHz
- External data memory writes occur every other cycle, a rate of $1/(4t_{HCLK})$, with 50% of the pins switching
- The bus cycle time is 100 MHz (t_{HCLK} = 20 nsec)

This information applies to a product under development. Its characteristics and specifications are subject to change without notice. Analog Devices assumes no obligation regarding future manufacturing unless otherwise agreed to in writing.

The P_{EXT} equation is calculated for each class of pins that can drive as shown in Table 24.

Table 24. P_{EXT} Calculation

Pin Type	# of Pins	% Switching	× C	× f	× V_{DD}^2	= P_{EXT}
Address	15	50	TBD pF	×25.0 MHz	×10.9 V	=TBD W
$\overline{MSx}$	1	0	TBD pF	×25.0 MHz	× 10.9 V	=TBD W
$\overline{WR}$	1	—	TBD pF	×25 MHz	×10.9 V	=TBD W
Data	16	50	TBD pF	×25.0 MHz	×10.9 V	=TBD W
CLKOUT	1	—	TBD pF	×100 MHz	×10.9 V	=TBD W
						P_{EXT}=TBD W

A typical power consumption can now be calculated for these conditions by adding a typical internal power dissipation with the formula in Figure 30.

$$P_{TOTAL} = P_{EXT} + P_{INT}$$

Figure 30. P_{TOTAL} (Typical) Calculation

Where:

- P_{EXT} is from Table 24
- P_{INT} is I_{DDINT} × 2.5V, using the calculation I_{DDINT} listed in Power Dissipation on page 52

Note that the conditions causing a worst-case P_{EXT} are different from those causing a worst-case P_{INT}. Maximum P_{INT} cannot occur while 100% of the output pins are switching from all ones to all zeros. Note also that it is not common for an application to have 100% or even 50% of the outputs switching simultaneously.

Test Conditions

The DSP is tested for output enable, disable, and hold time.

Output Disable Time

Output pins are considered to be disabled when they stop driving, go into a high impedance state, and start to decay from their output high or low voltage. The time for the voltage on the bus to decay by – V is dependent on the capacitive load, C_L and the load current, I_L. This decay time can be approximated by the equation in Figure 31.

$$t_{DECAY} = \frac{C_L \Delta V}{I_L}$$

Figure 31. Decay Time Calculation

The output disable time t_{DIS} is the difference between $t_{MEASURED}$ and t_{DECAY} as shown in Figure 32. The time $t_{MEASURED}$ is the interval from when the reference signal switches to when the output voltage decays –V from the measured output high or output low voltage. The t_{DECAY} is calculated with test loads C_L and I_L, and with –V equal to 0.5 V.

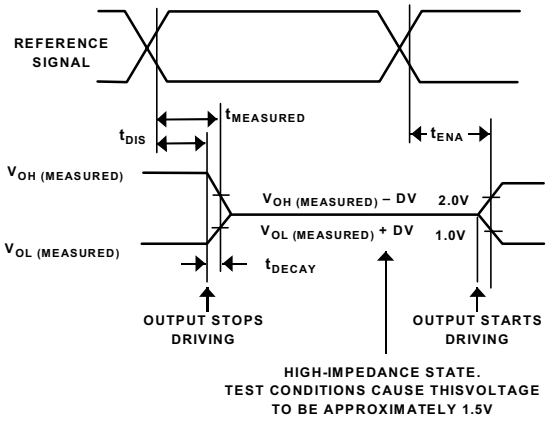

Figure 32. Output Enable/Disable

Output Enable Time

Output pins are considered to be enabled when they have made a transition from a high impedance state to when they start driving. The output enable time t_{ENA} is the interval from when a reference signal reaches a high or low voltage level to when the output has reached a specified high or low trip point, as shown in the Output Enable/Disable diagram (Figure 32). If multiple pins (such as the data bus) are enabled, the measurement value is that of the first pin to start driving.

This information applies to a product under development. Its characteristics and specifications are subject to change without notice. Analog Devices assumes no obligation regarding future manufacturing unless otherwise agreed to in writing.

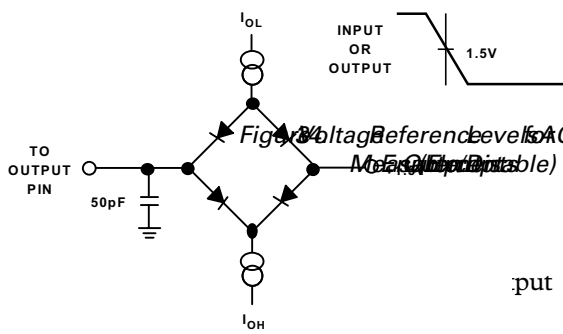

Figure 33. Equivalent Device Loading for AC Measurements (Includes All Fixtures)

0.4 V. C_T is the total bus e), e or data line). The hold time will be t_{DECAY} plus the minimum disable time (i.e., t_{DATRWH} for the write cycle).

put system, first calculate t_{DECAY} using the equation given in Figure 31. Choose –V to be the difference between the ADSP-2196's output voltage and the input threshold for the device requiring the hold time. A typical –V will be

Capacitive Loading

Output delays and holds are based on standard capacitive loads: 50 pF on all pins (see Figure 37). The delay and hold specifications given should be derated by a factor of 1.5 ns/50 pF for loads other than the nominal value of 50 pF. Figure 35 and Figure 36 show how output rise time varies with capacitance. These figures also show graphically how output delays and holds vary with load capacitance. (Note that this graph or derating does not apply to output disable delays; see Output Disable Time on page 54.) The graphs in these figures may not be linear outside the ranges shown.

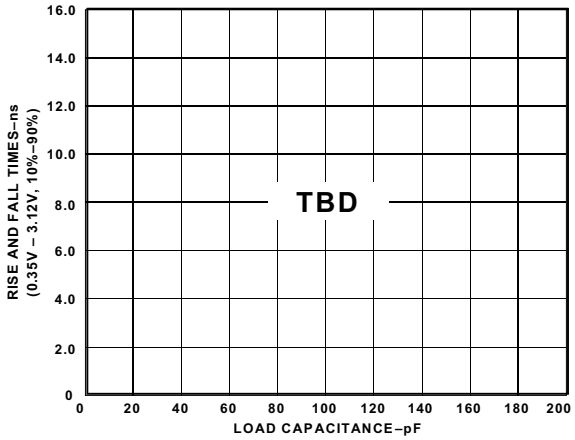

Figure 35. Typical Output Rise Time (10%–90%, V_{DDEXT}=Max) vs. Load Capacitance

Environmental Conditions

The thermal characteristics in which the DSP is operating influence performance.

Thermal Characteristics

The ADSP-2196 comes in a 144-lead LQFP or 144-lead Ball Grid Array (mini-BGA) package. The ADSP-2196 is specified for an ambient temperature (T_{AMB}) as calculated using the formula in Figure 38. To ensure that the T_{AMB} data sheet specification is not exceeded, a heatsink and/or an air flow source may be used. A heatsink should be attached to the ground plane (as close as possible to the thermal pathways) with a thermal adhesive.

Where:

- T_{AMB} = Ambient temperature (measured near top surface of package)
- PD = Power dissipation in W (this value depends upon the specific application; a method for calculating PD is shown under Power Dissipation).
- θ_{CA} = Value from Table 25.
- θ_{JB} = TBD°C/W

There are some important things to note about these T_{AMB} calculations and the values in Table 25:

- This represents thermal resistance at total power of TBD W.
- For the LQFP package: θ_{JC} = 0.96°C/W
  For the mini-BGA package: θ_{JC} = 8.4°C/W

This information applies to a product under development. Its characteristics and specifications are subject to change without notice. Analog Devices assumes no obligation regarding future manufacturing unless otherwise agreed to in writing.

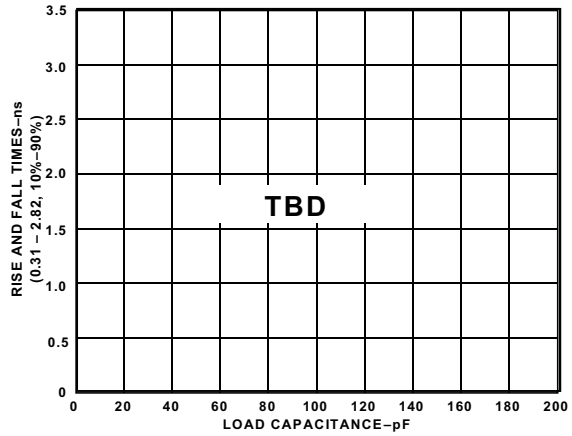

Figure 36. Typical Output Rise Time (10%-90%, V_{DDEXT} =Min) vs. Load Capacitance

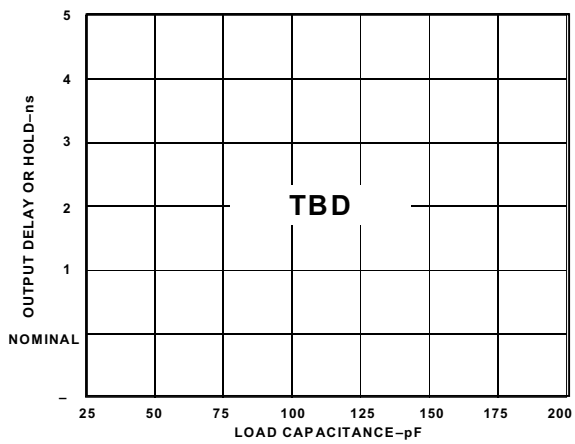

Figure 37. Typical Output Delay or Hold vs. Load Capacitance (at Max Case Temperature)

$$T_{AMB} = T_{CASE} - PD \times \theta_{CA}$$

Figure 38. T_{CASE} Calculation

Table 25. θ_{CA} Values[1]

Airflow (Linear Ft./Min.)	0	100	200	400	600
Airflow (Meters/Second)	0	0.5	1	2	3
LQFP: θ_{CA} (°C/W)	44.3	41.4	38.5	35.3	32.1
Mini-BGA: θ_{CA} (°C/W)	26	24	22	20.9	19.8

[1]These are preliminary estimates.

ADSP-2196 144-Lead LQFP Pinout

Table 26 lists the LQFP pinout by signal name.

Table 26. 144-Lead LQFP Pins (Alphabetically By Signal)

SIGNAL	PIN #
A0	84
A1	85
A2	86
A3	87
A4	88
A5	89
A6	91
A7	92
A8	93
A9	95
A10	96
A11	97
A12	98
A13	99
A14	101
A15	102
A16	103
A17	104
A18	106
A19	107
A20	108
A21	109
ACK	120
$\overline{BG}$	111
$\overline{BGH}$	110
BMODE0	70

Table 26. 144-Lead LQFP Pins (Alphabetically By Signal) (Continued)

SIGNAL	PIN #
BMODE1	71
$\overline{BMS}$	113
$\overline{BR}$	112
BYPASS	72
CLKOUT	130
D0	123
D1	124
D2	125
D3	126
D4	128
D5	135
D6	136
D7	137
D8	138
D9	139
D10	140
D11	141
D12	142
D13	144
D14	1
D15	2
DR0	60
DR1	67
DR2	49
DT0	56
DT1	64
DT2	46
$\overline{EMU}$	81
HACK	26
HACK_P	24

Table 26. 144-Lead LQFP Pins (Alphabetically By Signal) (Continued)

SIGNAL	PIN #
HAD0	3
HAD1	4
HAD2	6
HAD3	7
HAD4	8
HAD5	9
HAD6	10
HAD7	11
HAD8	12
HAD9	14
HAD10	15
HAD11	17
HAD12	18
HAD13	20
HAD14	21
HAD15	22
HA16	23
HALE	30
$\overline{HCMS}$	27
$\overline{HCIOMS}$	28
$\overline{HRD}$	31
$\overline{HWR}$	32
$\overline{IOMS}$	114
$\overline{MS0}$	115
$\overline{MS1}$	116
$\overline{MS2}$	117
$\overline{MS3}$	119
OPMODE	83
CLKIN	132
XTAL	133

Table 26. 144-Lead LQFP Pins (Alphabetically By Signal) (Continued)

SIGNAL	PIN #
PF0	34
PF1	35
PF2	36
PF3	37
PF4	38
PF5	39
PF6	41
PF7	42
RCLK0	61
RCLK1	68
RCLK2	50
$\overline{RESET}$	73
RFS0	62
RFS1	69
RFS2	51
$\overline{RD}$	122
RXD	52
TCK	78
TCLK0	57
TCLK1	65
TCLK2	47
TDI	75
TDO	74
TFS0	59
TFS1	66
TFS2	48
TMR0	43
TMR1	44
TMR2	45
TMS	76

Table 26. 144-Lead LQFP Pins (Alphabetically By Signal) (Continued)

SIGNAL	PIN #
$\overline{TRST}$	79
TXD	53
V_{DDEXT}	13
V_{DDEXT}	25
V_{DDEXT}	40
V_{DDEXT}	63
V_{DDEXT}	90
V_{DDEXT}	100
V_{DDEXT}	118
V_{DDEXT}	131
V_{DDEXT}	143
V_{DDINT}	19
V_{DDINT}	58
V_{DDINT}	82
V_{DDINT}	127
GND	5
GND	16
GND	29
GND	33
GND	54
GND	55
GND	77
GND	80
GND	94
GND	105
GND	129
GND	134
$\overline{WR}$	121

Table 27 lists the LQFP pinout by pin number.

Table 27. 144-Lead LQFP Pins (Numerically By Pin Number

SIGNAL	PIN #
D14	1
D15	2
HAD0	3
HAD1	4
GND	5
HAD2	6
HAD3	7
HAD4	8
HAD5	9
HAD6	10
HAD7	11
HAD8	12
V_{DDEXT}	13
HAD9	14
HAD10	15
GND	16
HAD11	17
HAD12	18
V_{DDINT}	19
HAD13	20
HAD14	21
HAD15	22
HA16	23
HACK_P	24
V_{DDEXT}	25
HACK	26
$\overline{HCMS}$	27
$\overline{HCIOMS}$	28

Table 27. 144-Lead LQFP Pins (Numerically By Pin Number (Continued)

SIGNAL	PIN #
GND	29
HALE	30
$\overline{HRD}$	31
$\overline{HWR}$	32
GND	33
PF0	34
PF1	35
PF2	36
PF3	37
PF4	38
PF5	39
V_{DDEXT}	40
PF6	41
PF7	42
TMR0	43
TMR1	44
TMR2	45
DT2	46
TCLK2	47
TFS2	48
DR2	49
RCLK2	50
RFS2	51
RXD	52
TXD	53
GND	54
GND	55
DT0	56
TCLK0	57
V_{DDINT}	58

Table 27. 144-Lead LQFP Pins (Numerically By Pin Number (Continued)

SIGNAL	PIN #
TFS0	59
DR0	60
RCLK0	61
RFS0	62
V_{DDEXT}	63
DT1	64
TCLK1	65
TFS1	66
DR1	67
RCLK1	68
RFS1	69
BMODE0	70
BMODE1	71
BYPASS	72
$\overline{RESET}$	73
TDO	74
TDI	75
TMS	76
GND	77
TCK	78
$\overline{TRST}$	79
GND	80
$\overline{EMU}$	81
V_{DDINT}	82
OPMODE	83
A0	84
A1	85
A2	86
A3	87
A4	88

This information applies to a product under development. Its characteristics and specifications are subject to change without notice. Analog Devices assumes no obligation regarding future manufacturing unless otherwise agreed to in writing.

Table 27. 144-Lead LQFP Pins (Numerically By Pin Number (Continued)

SIGNAL	PIN #
A5	89
V_{DDEXT}	90
A6	91
A7	92
A8	93
GND	94
A9	95
A10	96
A11	97
A12	98
A13	99
V_{DDEXT}	100
A14	101
A15	102
A16	103
A17	104
GND	105
A18	106
A19	107
A20	108
A21	109
$\overline{BGH}$	110
$\overline{BG}$	111
$\overline{BR}$	112
$\overline{BMS}$	113
$\overline{IOMS}$	114
$\overline{MS0}$	115
$\overline{MS1}$	116
$\overline{MS2}$	117
V_{DDEXT}	118

Table 27. 144-Lead LQFP Pins (Numerically By Pin Number (Continued)

SIGNAL	PIN #
$\overline{MS3}$	119
ACK	120
$\overline{WR}$	121
$\overline{RD}$	122
D0	123
D1	124
D2	125
D3	126
V_{DDINT}	127
D4	128
GND	129
CLKOUT	130
V_{DDEXT}	131
CLKIN	132
XTAL	133
GND	134
D5	135
D6	136
D7	137
D8	138
D9	139
D10	140
D11	141
D12	142
V_{DDEXT}	143
D13	144

This information applies to a product under development. Its characteristics and specifications are subject to change without notice. Analog Devices assumes no obligation regarding future manufacturing unless otherwise agreed to in writing.

ADSP-2196 144-Lead Mini-BGA Pinout

Table 28 lists the mini-BGA pinout by signal name.

Table 28. 144-Lead Mini-BGA Pins (Alphabetically By Signal)

SIGNAL	BALL #
A0	J11
A1	H9
A2	H10
A3	G12
A4	H11
A5	G10
A6	F12
A7	G11
A8	F10
A9	F11
A10	E12
A11	E11
A12	E10
A13	E9
A14	D11
A15	D10
A16	D12
A17	C11
A18	C12
A19	B12
A20	B11
A21	A11
ACK	A8
$\overline{BG}$	C10
$\overline{BGH}$	B10
BMODE0	L10
BMODE1	L9

Table 28. 144-Lead Mini-BGA Pins (Alphabetically By Signal) (Continued)

SIGNAL	BALL #
$\overline{BMS}$	A10
$\overline{BR}$	B9
BYPASS	M11
CLKIN	A5
CLKOUT	C6
D0	D7
D1	A7
D2	C7
D3	A6
D4	B7
D5	A4
D6	C5
D7	B5
D8	D5
D9	A3
D10	C4
D11	B4
D12	C3
D13	A2
D14	B1
D15	B2
DR0	L7
DR1	K9
DR2	L5
TCLK0	J6
DT1	L8
DT2	H4
$\overline{EMU}$	J10
HACK	H3
HACK_P	G1

This information applies to a product under development. Its characteristics and specifications are subject to change without notice. Analog Devices assumes no obligation regarding future manufacturing unless otherwise agreed to in writing.

Table 28. 144-Lead Mini-BGA Pins (Alphabetically By Signal) (Continued)

SIGNAL	BALL #
HAD0	C1
HAD1	B3
HAD2	C2
HAD3	D1
HAD4	D4
HAD5	D3
HAD6	D2
HAD7	E1
HAD8	E4
HAD9	E2
HAD10	F1
HAD11	E3
HAD12	F2
HAD14	F3
HAD15	G3
HAD13	G2
HA16	H2
HALE	J1
$\overline{\text{HCIOMS}}$	J3
$\overline{\text{HCMS}}$	H1
$\overline{\text{HRD}}$	J2
$\overline{\text{HWR}}$	K2
$\overline{\text{IOMS}}$	E8
$\overline{\text{MS0}}$	D9
$\overline{\text{MS1}}$	A9
$\overline{\text{MS2}}$	C9
$\overline{\text{MS3}}$	D8
OPMODE	H12
PF0	K1
PF1	L1

Table 28. 144-Lead Mini-BGA Pins (Alphabetically By Signal) (Continued)

SIGNAL	BALL #
PF2	M2
PF3	L2
PF4	M3
PF5	L3
PF6	K3
PF7	M4
RCLK0	K7
RCLK1	J9
RCLK2	J5
$\overline{\text{RD}}$	B8
$\overline{\text{RESET}}$	L12
RFS0	K8
RFS1	M10
RFS2	M6
RXD	K6
TCK	K11
DT0	H6
TCLK1	M9
TCLK2	K5
TDI	K12
TDO	L11
TFS0	M8
TFS1	J8
TFS2	M5
TMR0	K4
TMR1	L4
TMR2	J4
TMS	K10
$\overline{\text{TRST}}$	J12
TXD	M7

This information applies to a product under development. Its characteristics and specifications are subject to change without notice. Analog Devices assumes no obligation regarding future manufacturing unless otherwise agreed to in writing.

Table 28. 144-Lead Mini-BGA Pins (Alphabetically By Signal) (Continued)

SIGNAL	BALL #
V_{DDINT}	D6
V_{DDINT}	F4
V_{DDINT}	G9
V_{DDINT}	J7
V_{DDEXT}	E5
V_{DDEXT}	E6
V_{DDEXT}	F5
V_{DDEXT}	F6
V_{DDEXT}	G7
V_{DDEXT}	G8
V_{DDEXT}	H7
V_{DDEXT}	H8
GND	A1
GND	A12
GND	E7
GND	F7
GND	F8
GND	F9
GND	G4
GND	G5
GND	G6
GND	H5
GND	L6
GND	M1
GND	M12
WR	C8
XTAL	B6

Table 29 lists the mini-BGA pinout by ball number.

Table 29. 144-Lead Mini-BGA Pins (Numerically By Ball Number)

SIGNAL	BALL #
GND	A1
D13	A2
D9	A3
D5	A4
CLKIN	A5
D3	A6
D1	A7
ACK	A8
$\overline{MS1}$	A9
$\overline{BMS}$	A10
A21	A11
GND	A12
D14	B1
D15	B2
HAD1	B3
D11	B4
D7	B5
XTAL	B6
D4	B7
$\overline{RD}$	B8
$\overline{BR}$	B9
$\overline{BGH}$	B10
A20	B11
A19	B12
HAD0	C1
HAD2	C2
D12	C3
D10	C4
D6	C5

This information applies to a product under development. Its characteristics and specifications are subject to change without notice. Analog Devices assumes no obligation regarding future manufacturing unless otherwise agreed to in writing.

Table 29. 144-Lead Mini-BGA Pins (Numerically By Ball Number) (Continued)

SIGNAL	BALL #
CLKOUT	C6
D2	C7
$\overline{WR}$	C8
$\overline{MS2}$	C9
$\overline{BG}$	C10
A17	C11
A18	C12
HAD3	D1
HAD6	D2
HAD5	D3
HAD4	D4
D8	D5
V_{DDINT}	D6
D0	D7
$\overline{MS3}$	D8
$\overline{MS0}$	D9
A15	D10
A14	D11
A16	D12
HAD7	E1
HAD9	E2
HAD11	E3
HAD8	E4
V_{DDEXT}	E5
V_{DDEXT}	E6
GND	E7
$\overline{IOMS}$	E8
A13	E9
A12	E10
A11	E11

Table 29. 144-Lead Mini-BGA Pins (Numerically By Ball Number) (Continued)

SIGNAL	BALL #
A10	E12
HAD10	F1
HAD12	F2
HAD14	F3
V_{DDINT}	F4
V_{DDEXT}	F5
V_{DDEXT}	F6
GND	F7
GND	F8
GND	F9
A8	F10
A9	F11
A6	F12
HACK_P	G1
HAD13	G2
HAD15	G3
GND	G4
GND	G5
GND	G6
V_{DDEXT}	G7
V_{DDEXT}	G8
V_{DDINT}	G9
A5	G10
A7	G11
A3	G12
$\overline{HCMS}$	H1
HA16	H2
HACK	H3
DT2	H4
GND	H5

This information applies to a product under development. Its characteristics and specifications are subject to change without notice. Analog Devices assumes no obligation regarding future manufacturing unless otherwise agreed to in writing.

Table 29. 144-Lead Mini-BGA Pins (Numerically By Ball Number) (Continued)

SIGNAL	BALL #
DT0	H6
V_{DDEXT}	H7
V_{DDEXT}	H8
A1	H9
A2	H10
A4	H11
OPMODE	H12
HALE	J1
$\overline{HRD}$	J2
$\overline{HCIOMS}$	J3
TMR2	J4
RCLK2	J5
TCLK0	J6
V_{DDINT}	J7
TFS1	J8
RCLK1	J9
$\overline{EMU}$	J10
A0	J11
$\overline{TRST}$	J12
PF0	K1
$\overline{HWR}$	K2
PF6	K3
TMR0	K4
TCLK2	K5
RXD	K6
RCLK0	K7
RFS0	K8
DR1	K9
TMS	K10
TCK	K11

Table 29. 144-Lead Mini-BGA Pins (Numerically By Ball Number) (Continued)

SIGNAL	BALL #
TDI	K12
PF1	L1
PF3	L2
PF5	L3
TMR1	L4
DR2	L5
GND	L6
DR0	L7
DT1	L8
BMODE1	L9
BMODE0	L10
TDO	L11
$\overline{RESET}$	L12
GND	M1
PF2	M2
PF4	M3
PF7	M4
TFS2	M5
RFS2	M6
TXD	M7
TFS0	M8
TCLK1	M9
RFS1	M10
BYPASS	M11
GND	M12

This information applies to a product under development. Its characteristics and specifications are subject to change without notice. Analog Devices assumes no obligation regarding future manufacturing unless otherwise agreed to in writing.

OUTLINE DIMENSIONS

.

144-LEAD METRIC THIN PLASTIC QUAD FLATPACK (LQFP) (ST-144)

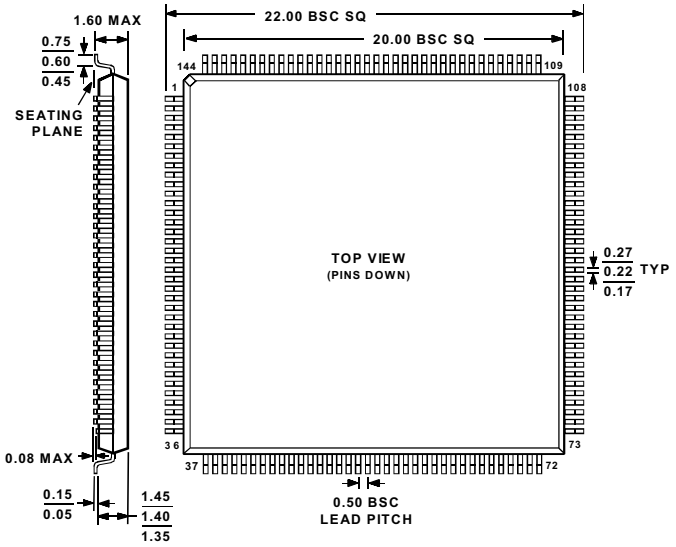

NOTES:

1. DIMENSIONS IN MILLIMETERS.
2. ACTUAL POSITION OF EACH LEAD IS WITHIN 0.08 OF ITS IDEAL POSITION, WHEN MEASURED IN THE LATERAL DIRECTION.
3. CENTER DIMENSIONS ARE NOMINAL.

144-BALL MINI-BGA (CA-144)

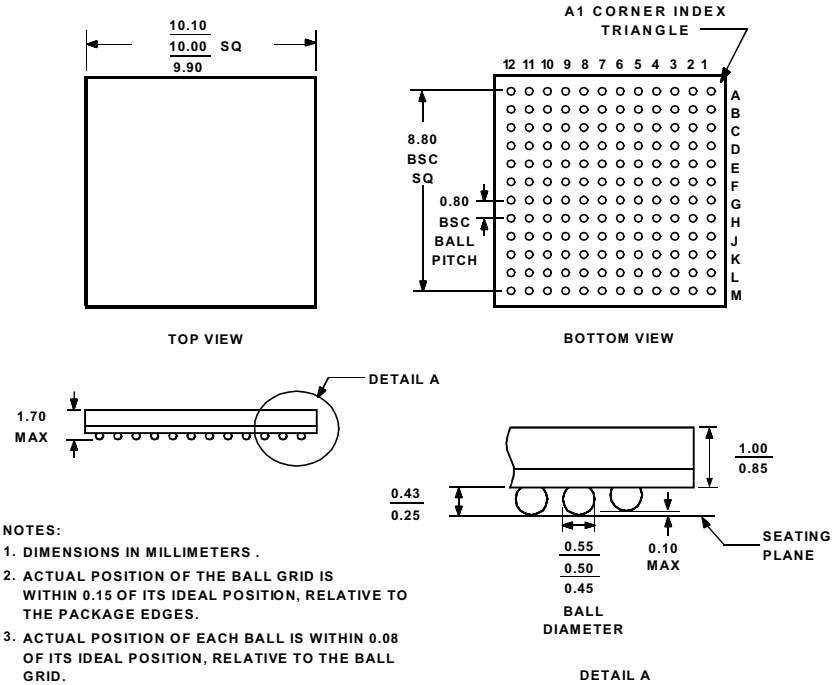

NOTES:

1. DIMENSIONS IN MILLIMETERS .
2. ACTUAL POSITION OF THE BALL GRID IS WITHIN 0.15 OF ITS IDEAL POSITION, RELATIVE TO THE PACKAGE EDGES.
3. ACTUAL POSITION OF EACH BALL IS WITHIN 0.08 OF ITS IDEAL POSITION, RELATIVE TO THE BALL GRID.
4. CENTER DIMENSIONS ARE NOMINAL.

This information applies to a product under development. Its characteristics and specifications are subject to change without notice. Analog Devices assumes no obligation regarding future manufacturing unless otherwise agreed to in writing.

ORDERING GUIDE

Part Number[1, 2]	Ambient Temperature Range	Instruction Rate	On-Chip SRAM	Operating Voltage
ADSP-2196MKST-160X	0°C to 70°C	160 MHz	1.3M bit	2.5 Int./3.3 Ext. V
ADSP-2196MBST-140X	-40°C to 85°C	140 MHz	1.3M bit	2.5 Int./3.3 Ext. V
ADSP-2196MKCA-160X	0°C to 70°C	160 MHz	1.3M bit	2.5 Int./3.3 Ext. V
ADSP-2196MBCA-140X	-40°C to 85°C	140 MHz	1.3M bit	2.5 Int./3.3 Ext. V

[1]ST = Plastic Thin Quad Flatpack (LQFP).

[2]CA = Chip array package

This information applies to a product under development. Its characteristics and specifications are subject to change without notice. Analog Devices assumes no obligation regarding future manufacturing unless otherwise agreed to in writing.

中发网 WWW.ZFA.CN
全球最大的PDF中文下载站
中发网
www.zfa.cn
PDF 资料下载尽在中发网