STRUCTURE SILICON MONOLITHIC INTEGRATED CIRCUIT

FUNCTION GROUND SENSE QUAD OPERATIONAL AMPLIFIERS

PRODUCT SERIES **BA2902F**
BA2902FV
BA2902KN

FEATURES
- Wide operating temperature range. (-40～+125[℃])
- Operable with a single power supply. (3[V]～32[V])

○ABSOLUTE MAXIMUM RATINGS(Ta=25[℃])

Parameter	Symbol		Rating	Unit
Supply Voltage	VCC-VEE		+32	V
Power dissipation	Pd	BA2902F	610(*1)(*4)	mW
		BA2902FV	870(*2)(*4)	mW
		BA2902KN	660(*3)(*4)	mW
Differential Input Voltage (*5)	Vid		±32	V
Input Common-mode Voltage Range	Vicm		(VEE-0.3)～VEE+32	V
Operating Temperature	Topr		-40～+125	℃
Storage Temperature Range	Tstg		-55～+150	℃
Maximum junction Temperature	Tjmax		150	℃

- This IC is not designed for protection against radioactive rays.

(*1) To use at temperature above Ta=25[℃] reduce 4.9[mW]/[℃].
(*2) To use at temperature above Ta=25[℃] reduce 7.0[mW]/[℃].
(*3) To use at temperature above Ta=25[℃] reduce 5.3[mW]/[℃].
(*4) Mounted on a glass epoxy PCB(70[mm]×70[mm]×1.6[mm]).
(*5) The voltage difference between inverting input and non-inverting input is the differential input voltage. Then input terminal voltage is set to more than VEE.

○OPERATING CONDITION(Ta=-40～+125[℃])

Parameter	Symbol	Rating	Unit
Supply Voltage	VCC	+3.0～+32.0 (Single Supply)	V
		±1.5～±16.0 (Split Supply)	

Status of this document
The Japanese version of this document is the formal specification.
A customer may use this translation version only for a reference to help reading the formal version.
If there are any differences in translation version of this document formal version takes priority.

Application example
- ROHM cannot provide adequate confirmation of patents.
- The product described in this specification is designed to be used with ordinary electronic equipment or devices (such as audio-visual equipment, office-automation equipment, communications devices, electrical appliances, and electronic toys).
  Should you intend to use this product with equipment or devices which require an extremely high level of reliability and the malfunction of which would directly endanger human life (such as medical Instruments, transportation equipment, aerospace machinery, nuclear-reactor controllers, fuel controllers and other safety devices),please be sure to consult with our sales representative in advance.
- ROHM assumes no responsibility for use of any circuits described herein, conveys no license under any patent or other right, and makes no representations that the circuits are free from patent infringement.

○ELECTRICAL CHARACTERISTICS (unless otherwise specified VCC=+5[V]、VEE=0[V])

Parameter	Symbol	Temperature Range	Guaranteed Limit Min.	Typ.	Max.	Unit	Condition
Input Offset Voltage (*6)	Vio	25℃	-	2	7	mV	VOUT=1.4[V]
		full range	-	-	10		VCC=5～30[V],VOUT=1.4[V]
Temperature Coefficient of Input Offset Voltage	ΔVio/ΔT	-	-	±7	-	μV/℃	VOUT=1.4[V]
Input Offset Current (*6)	Iio	25℃	-	2	50	nA	VOUT=1.4[V]
		full range	-	-	200		
Temperature Coefficient of Input Offset Current	ΔIio/ΔT	-	-	±10	-	pA/℃	VOUT=1.4[V]
Input Bias Current (*6)	Ib	25℃	-	20	250	nA	VOUT=1.4[V]
		full range	-	-	250		
Supply Current	ICC	25℃	-	0.7	2	mA	RL=∞ All Op-Amps
		full range	-	-	3		
High Level Output Voltage	VOH	25℃	3.5	-	-	V	RL=2[kΩ]
		full range	27	28	-		VCC=30[V],RL=10[kΩ]
Low Level Output Voltage	VOL	full range	-	5	20	mV	RL=∞ All Op-Amps
Large Signal Voltage Gain	AV	25℃	25	100	-	V/mV	RL≧2[kΩ],VCC=15[V] VOUT=1.4～11.4[V]
Input Common-mode Voltage Range	Vicm	25℃	0	-	VCC-1.5	V	(VCC-VEE)=5[V],VOUT=VEE+1.4[V]
Common-mode Rejection Ratio	CMRR	25℃	50	80	-	dB	VOUT=1.4[V]
Power Supply Rejection Ratio	PSRR	25℃	65	100	-	dB	VCC=5～30[V]
Output Source Current (*7)	IOH	25℃	20	30	-	mA	VIN+=1[V],VIN-=0[V],VOUT=0[V], Only 1CH is short circuits
		full range	10	-	-		
Output Sink Current (*7)	IOL	25℃	10	20	-	mA	VIN+=0[V],VIN-=1[V],VOUT=5[V], Only 1CH is short circuits
		full range	2	-	-		
	Isink	25℃	12	40	-	μA	VIN+=0[V],VIN-=1[V],VOUT=200[mV]
Channel Separation	CS	25℃	-	120	-	dB	f=1[kHz],input referred
Slew Rate	SR	25℃	-	0.2	-	V/μs	VCC=15[V],AV=0[dB], RL=2[kΩ], CL=100[pF]
Maximum Frequency	ft	25℃	-	0.5	-	MHz	VCC=30[V],RL=2[kΩ],CL=100[pF]
Input Referred Noise Voltage	Vn	25℃	-	40	-	nV/√Hz	VCC=15[V],VEE=-15[V],RS=100[Ω], Vi=0[V],f=1[kHz]

(*6) Absolute value.
(*7) Under the high temperature environment, consider the power dissipation of IC when select the output current.
When output terminal short circuits continuously, the output current reduce to climb temperature inside IC by flash.

○Physical Dimensions

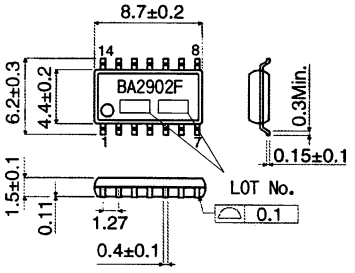

BA2902F(SOP14) (Unit:[mm])

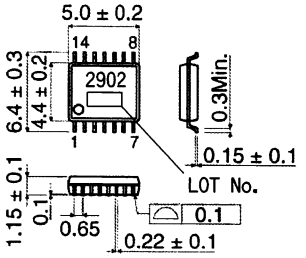

BA2902FV(SSOP-B14) (Unit:[mm])

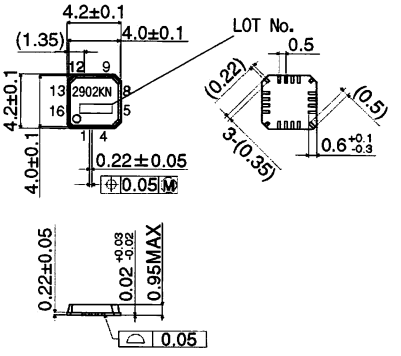

BA2902KN(VQFN16) (Unit:[mm])

○Block diagram

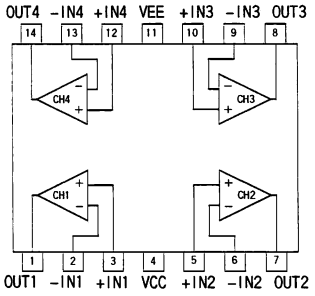

F:SOP14 FV:SSOP-B14

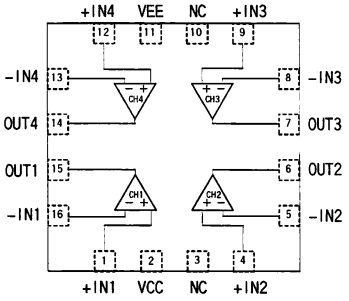

KN:VQFN16

○Pin No. • Pin Name

Pin No.	Pin Name
1	OUT1
2	-IN1
3	+IN1
4	VCC
5	+IN2
6	-IN2
7	OUT2
8	OUT3
9	-IN3
10	+IN3
11	VEE
12	+IN4
13	-IN4
14	OUT4

Pin No.	Pin Name
1	+IN1
2	VCC
3	NC
4	+IN2
5	-IN2
6	OUT2
7	OUT3
8	-IN3
9	+IN3
10	NC
11	VEE
12	+IN4
13	-IN4
14	OUT4
15	OUT1
16	-IN1

○Application example

(1) Absolute maximum ratings
Absolute maximum ratings are the values which indicate the limits, within which the given voltage range can be safely charged to the terminal. However, it does not guarantee the circuit operation.

(2) The example of disabled circuit application
When there is a circuit not in use, it is recommended to make the non-inverting input terminal be the potential in the common-mode input voltage range like in Fig.1.

(3) Applied voltage to the input terminal
Regardless of power supply voltage, VEE+32 [V] can be applied to input terminals without deterioration or destruction of its characteristics. However, this does not guarantee a circuit operation.
Note that circuits do not operate normally with input voltage not within input common mode voltage in terms of the electrical characteristics.

(4) Operating power supply (split power supply/single power supply)
The OP-Amp operates if a given level of voltage is applied between VCC and VEE. Therefore, the OP-Amp can be operated under single power supply or split power supply.

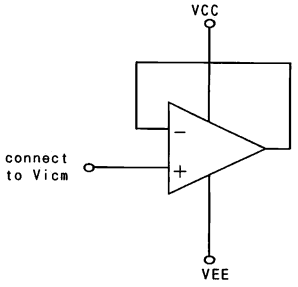

Fig.1 The example of disabled circuit

(5) Power dissipation(Pd)

If the IC is used under excessive power dissipation. An increase in the chip temperature will cause deterioration of the radical characteristics of IC.
For example, reduction of current capability. Take consideration of the effective power dissipation and thermal design with a sufficient margin. Pd is reference to the provided power dissipation curve.

(6) Short circuits between pins and incorrect mounting

Short circuits between pins and incorrect mounting when mounting the IC on a printed circuits board, take notice of the direction and positioning of the IC.
If IC is mounted erroneously, It may be damaged. Also, when a foreign object is inserted between output, between output and VCC terminal or VEE terminal which causes short circuit, the IC may be damaged.

(7) Using under strong electromagnetic field

Be careful when using the IC under strong electromagnetic field because it may malfunction.

(8) Usage of IC

When stress is applied to the IC through warp of the printed circuit board,
The characteristics may fluctuate due to the piezo effect.
Be careful of the warp of the printed circuit board.

(9) Output operation

This IC is configured with a push-pull circuit and Class C output stage. Therefore, when load resistance is connected to the middle point potential of VCC and VEE, this configuration generates crossover distortion when switching source and sink current.
To suppress crossover distortion, connect a resistor between the output terminal and VEE then increase the bias current to enable Class A operation.

(10) Testing IC on the set board

When testing IC on the set board, in cases where the capacitor is connected to the low impedance, make sure to discharge per fabrication because there is a possibility that IC may be damaged by stress.
When removing IC from the set board, it is essential to cut supply voltage.
As a countermeasure against the static electricity, observe proper grounding during fabrication process and take due care when carrying and storage it.

(11) Output terminal capacitor

Tr in circuits may be damaged when VCC terminal and VEE terminal is shorted with the charged output terminal capacitor.
When IC is used as a comparator or as an application circuit, where oscillation is not activated by an output capacitor, the output capacitor must be kept below 0.1[μF] in order to prevent the damage mentioned above.

Notes

- No technical content pages of this document may be reproduced in any form or transmitted by any means without prior permission of ROHM CO.,LTD.
- The contents described herein are subject to change without notice. The specifications for the product described in this document are for reference only. Upon actual use, therefore, please request that specifications to be separately delivered.
- Application circuit diagrams and circuit constants contained herein are shown as examples of standard use and operation. Please pay careful attention to the peripheral conditions when designing circuits and deciding upon circuit constants in the set.
- Any data, including, but not limited to application circuit diagrams information, described herein are intended only as illustrations of such devices and not as the specifications for such devices. ROHM CO.,LTD. disclaims any warranty that any use of such devices shall be free from infringement of any third party's intellectual property rights or other proprietary rights, and further, assumes no liability of whatsoever nature in the event of any such infringement, or arising from or connected with or related to the use of such devices.
- Upon the sale of any such devices, other than for buyer's right to use such devices itself, resell or otherwise dispose of the same, no express or implied right or license to practice or commercially exploit any intellectual property rights or other proprietary rights owned or controlled by
- ROHM CO., LTD. is granted to any such buyer.
- Products listed in this document are no antiradiation design.

The products listed in this document are designed to be used with ordinary electronic equipment or devices (such as audio visual equipment, office-automation equipment, communications devices, electrical appliances and electronic toys).
Should you intend to use these products with equipment or devices which require an extremely high level of reliability and the malfunction of with would directly endanger human life (such as medical instruments, transportation equipment, aerospace machinery, nuclear-reactor controllers, fuel controllers and other safety devices), please be sure to consult with our sales representative in advance.

About Export Control Order in Japan

Products described herein are the objects of controlled goods in Annex 1 (Item 16) of Export Trade Control Order in Japan.
In case of export from Japan, please confirm if it applies to "objective" criteria or an "informed" (by MITI clause) on the basis of "catch all controls for Non-Proliferation of Weapons of Mass Destruction.

Thank you for your accessing to ROHM product informations.

More detail product informations and catalogs are available,

please contact your nearest sales office.

Please contact our sales offices for details ;

U.S.A / San Diego	TEL : +1(858)625-3630	FAX : +1(858)625-3670
Atlanta	TEL : +1(770)754-5972	FAX : +1(770)754-0691
Dallas	TEL : +1(972)312-8818	FAX : +1(972)312-0330
Germany / Dusseldorf	TEL : +49(2154)9210	FAX : +49(2154)921400
United Kingdom / London	TEL : +44(1)908-282-666	FAX : +44(1)908-282-528
France / Paris	TEL : +33(0)1 56 97 30 60	FAX : +33(0) 1 56 97 30 80
China / Hong Kong	TEL : +852(2)740-6262	FAX : +852(2)375-8971
Shanghai	TEL : +86(21)6279-2727	FAX : +86(21)6247-2066
Dilian	TEL : +86(411)8230-8549	FAX : +86(411)8230-8537
Beijing	TEL : +86(10)8525-2483	FAX : +86(10)8525-2489
Taiwan / Taipei	TEL : +866(2)2500-6956	FAX : +866(2)2503-2869
Korea / Seoul	TEL : +82(2)8182-700	FAX : +82(2)8182-715
Singapore	TEL : +65-6332-2322	FAX : +65-6332-5662
Malaysia / Kuala Lumpur	TEL : +60(3)7958-8355	FAX : +60(3)7958-8377
Philippines / Manila	TEL : +63(2)807-6872	FAX : +63(2)809-1422
Thailand / Bangkok	TEL : +66(2)254-4890	FAX : +66(2)256-6334

Japan /
(Internal Sales)

Tokyo	2-1-1, Yaesu, Chuo-ku, Tokyo 104-0082	
	TEL : +81(3)5203-0321	FAX : +81(3)5203-0300
Yokohama	2-4-8, Shin Yokohama, Kohoku-ku, Yokohama, Kanagawa 222-8575	
	TEL : +81(45)476-2131	FAX : +81(45)476-2128
Nagoya	Dainagayo Building 9F 3-28-12, Meieki, Nakamura-ku, Nagoya,Aichi 450-0002	
	TEL : +81(52)581-8521	FAX : +81(52)561-2173
Kyoto	579-32 Higashi Shiokouji-cho, Karasuma Nishi-iru, Shiokoujidori, Shimogyo-ku, Kyoto 600-8216	
	TEL : +81(75)311-2121	FAX : +81(75)314-6559

(Contact address for overseas customers in Japan)

Yokohama	TEL : +81(45)476-9270	FAX : +81(045)476-9271

As of 18th. April 2005