查询DN139供应商 捷多邦，专业PCB打样工厂，24小时加急出货

LINEAR TECHNOLOGY

DESIGN NOTES

Number 14 in a series from Linear Technology Corporation September, 1988

Extending the Applications of 5V Powered RS232 Transceivers

High Speed Operation

Although the EIA RS232 specification is for a relatively slow communications protocol, many applications require RS232 transceivers to operate at higher frequencies. Devices such as the LT1080, LT1081, and the LT1130 series share a common design for the drivers and receivers and are capable of operating over 100 kilobaud.

Although the slew rate is controlled for all of the Linear Technology series of RS232 communications devices, for output levels limited to ±6V the transition time is fast enough to allow high baud rates. With a slew rate of approximately 10V per microsecond, it only takes 1.2 microseconds for a 12V excursion. The two photos (Figure 1 and Figure 2) show the output waveform and delay associated with a 75kHz square wave input and a 100kHz square wave. Delay times are in the order of 0.5 microseconds and the total slew time is approximately 1.2 microseconds. Output load is 3k. Receivers are much faster and can handle these baud rates with no problem. For higher communication rates, a differential signal is recommended.

Power Supply Tricks

The power supply generator on 5V powered devices is a charge pump circuit which generates approximately ±9V from a single 5V supply. Parallel operation of the supply charge pumps for 5V powered transceivers is easily achieved to minimize component count. The positive and negative supply have approximately 1μF of holding capacitance for energy storage. If several devices with charge pumps are used in the same system, the output supplies may be paralleled into a single pair of common energy storage capacitors.

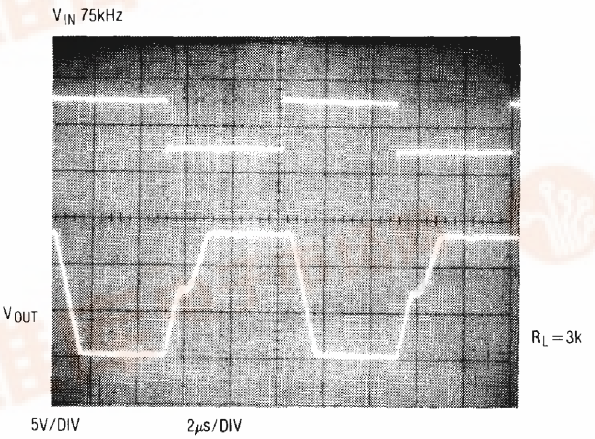

Figure 1. Operation at 75kHz

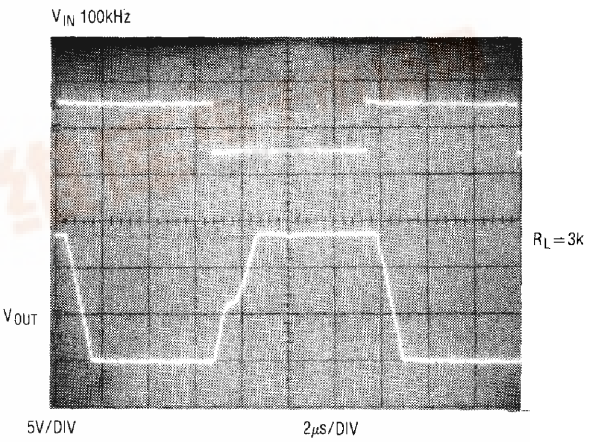

Figure 2. Operation at 100kHz

找PDF 维库一下 pdf.dzsc.com

Figure 3 shows two LT1080's with common power supply capacitors for energy storage. Twice the output current is available for external use. This eliminates two capacitors from the system. Individual charge pump capacitors are still needed on each of the devices.

Operation with +5V and +12V Supplies

The charge pump circuitry takes the input 5V and doubles it. The doubled voltage is then inverted to obtain a negative output. The only reason for doubling the input is to ensure adequate positive and negative output voltage to meet RS232 specifications. In PC systems, where +12V is available, the internal voltage doubler does not need to be used. The device may be connected directly to a +5V and a +12V supply. The +12V is then inverted to obtain approximately −11V. This eliminates one charge pump capacitor and one holding capacitor for the 12V output. Figure 4 shows an LT1080 connected to a 12V and 5V power supply. The +12V is connected into one of the charge pump capacitor pins rather than the 12V output pin. Supply current also decreases to about 9mA.

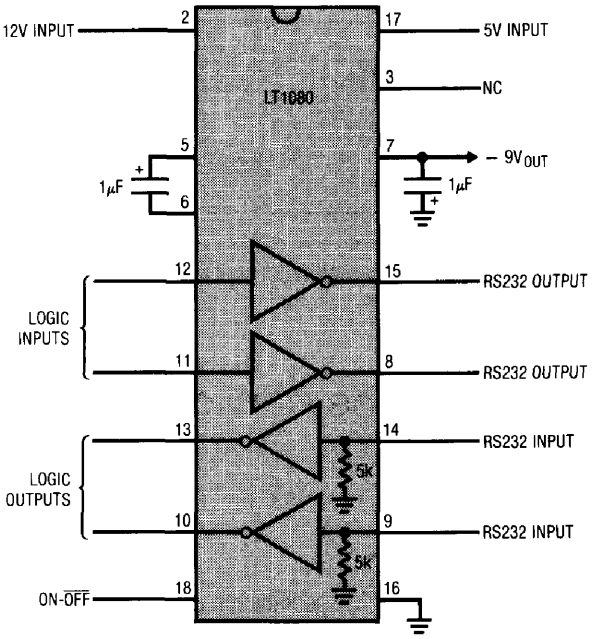

Figure 4. Operation with +12V and +5V Supplies

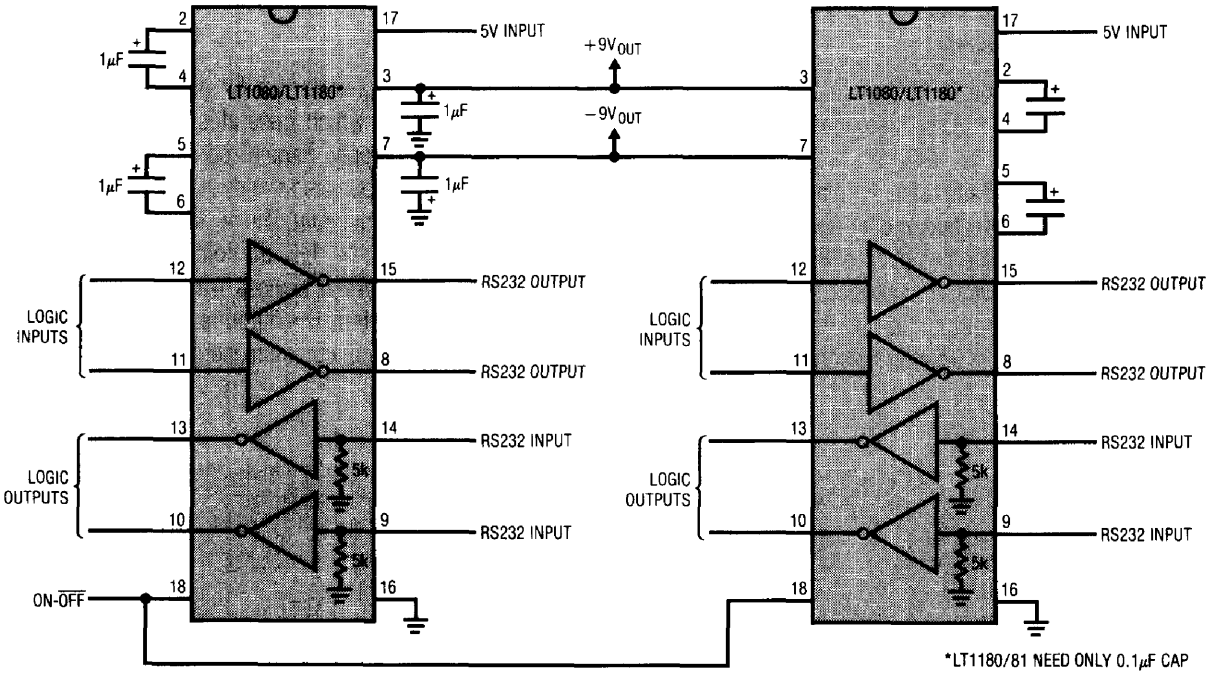

Figure 3. Paralleling Power Outputs

For literature about our complete line of RS232 products, call **800-637-5545.** For help with an application, call (408) 432-1900, Ext. 357.